FOREWORD

This wiring diagram manual has been prepared to provide information on the electrical system of the 1995 SUPRA.

Applicable models: JZA 80 Series

For service specifications and repair procedures of the above models other than those listed in this manual, refer to the following manuals:

Manual Name	Pub. No.
• 1995 SUPRA Repair Manual Volume 1 Volume 2 • 1995 TOYOTA New Car Features	 RM408U1 RM408U2 NCF109U

All information in this manual is based on the latest product information at the time of publication. However, specifications and procedures are subject to change without notice.

TOYOTA MOTOR CORPORATION

NOTICE

When handling supplemental restraint system components (removal, installation or inspection, etc.), always follow the direction given in the repair manuals listed above to prevent accidents and supplemental restraint system malfunction.

INTRODUCTION

This manual consists of the following 11 sections:

No.	Section	Description
A	INDEX	Index of the contents of this manual.
	INTRODUCTION	Brief explanation of each section.
B	HOW TO USE THIS MANUAL	Instructions on how to use this manual.
C	TROUBLE–SHOOTING	Describes the basic inspection procedures for electrical circuits.
D	ABBREVIATIONS	Defines the abbreviations used in this manual.
E	GLOSSARY OF TERMS AND SYMBOLS	Defines the symbols and functions of major parts.
F	RELAY LOCATIONS	Shows position of the Electronic Control Unit, Relays, Relay Block, etc. This section is closely related to the system circuit.
G	ELECTRICAL WIRING ROUTING	Describes position of Parts Connectors, Splice points, Ground points, etc. This section is closely related to the system circuit.
H	POWER SOURCE (Current Flow Chart)	Describes power distribution from the power supply to various electrical loads.
I	INDEX	Index of the system circuits.
	SYSTEM CIRCUITS	Electrical circuits of each system are shown from the power supply through ground points. Wiring connections and their positions are shown and classified by code according to the connection method. (Refer to the section, “How to use this manual”). The “System Outline” and “Service Hints” useful for troubleshooting are also contained in this section.
J	GROUND POINTS	Shows ground positions of all parts described in this manual.
K	OVERALL ELECTRICAL WIRING DIAGRAM	Provides circuit diagrams showing the circuit connections.

This manual provides information on the electrical circuits installed on vehicles by dividing them into a circuit for each system.

The actual wiring of each system circuit is shown from the point where the power source is received from the battery as far as each ground point. (All circuit diagrams are shown with the switches in the OFF position.)

When troubleshooting any problem, first understand the operation of the circuit where the problem was detected (see System Circuit section), the power source supplying power to that circuit (see Power Source section), and the ground points (see Ground Points section). See the System Outline to understand the circuit operation.

When the circuit operation is understood, begin troubleshooting of the problem circuit to isolate the cause. Use Relay Location and Electrical Wire Routing sections to find each part, junction block and wiring harness connectors, wiring harness and wiring harness connectors, splice points, and ground points of each system circuit. Internal wiring for each junction block is also provided for better understanding of connection within a junction block.

Wiring related to each system is indicated in each system circuit by arrows (from __ , to __). When overall connections are required, see the Overall Wiring Diagram at the end of this manual.

* The system shown here is an EXAMPLE ONLY. It is different to the actual circuit shown in the SYSTEM CIRCUITS SECTION.

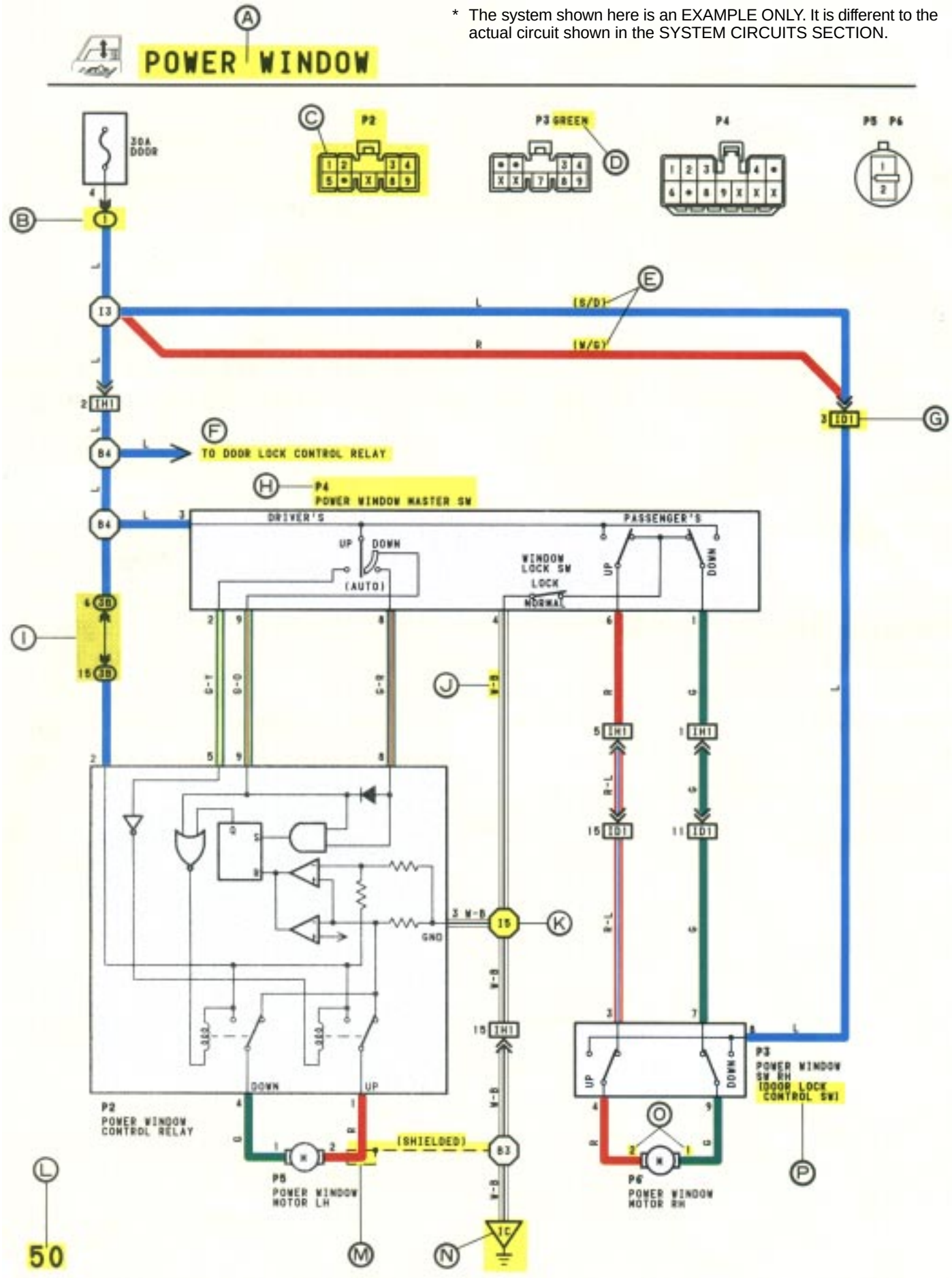

Ⓐ : System Title

Ⓑ : Indicates a Relay Block. No shading is used and only the Relay Block No. is shown to distinguish it from the J/B.

Example: Indicates Relay Block No. 1.

Ⓒ : Indicates the connector to be connected to a part (the numeral indicates the pin No.)

Explanation of pin use.

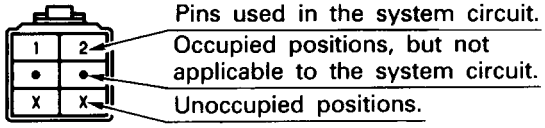

The pins shown are only for the highest grade, or only include those in the specification.

Ⓓ : Connector Color

Connectors not indicated are milky white in color.

Ⓔ : ( ) is used to indicate different wiring and connector, etc. when the vehicle model, engine type, or specification is different.

Ⓕ : Indicates related system.

Ⓖ : Indicates the wiring harness and wiring harness connector. The wiring harness with male terminal is shown with arrows (⩔).

Outside numerals are pin numbers.

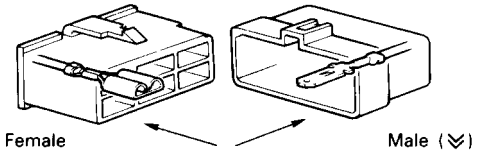

The first letter of the code for each wiring harness and wiring harness connector(s) indicates the component's location, e.g., "E" for the Engine Compartment, "I" for the Instrument Panel and Surrounding area, and "B" for the Body and Surrounding area.

When more than one code has the first and second letters in common, followed by numbers (e.g., IH1, IH2), this indicates the same type of wiring harness and wiring harness connector.

Ⓗ : Represents a part (all parts are shown in sky blue). The code is the same as the code used in parts position.

Ⓘ : Junction Block (The number in the circle is the J/B No. and the connector code is shown beside it). Junction Blocks are shaded to clearly separate them from other parts (different junction blocks are shaded differently for further clarification).

Example:

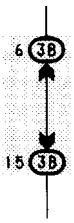

3B indicates that it is inside Junction Block No. 3.

Ⓙ : Indicates the wiring color.

Wire colors are indicated by an alphabetical code.

B = Black	L = Blue	R = Red
BR = Brown	LG = Light Green	V = Violet
G = Green	O = Orange	W = White
GR = Gray	P = Pink	Y = Yellow

The first letter indicates the basic wire color and the second letter indicates the color of the stripe.

Example: L – Y

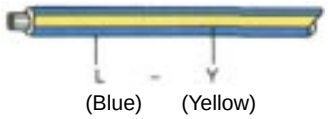

(Blue) (Yellow)

Ⓚ : Indicates a wiring Splice Point (Codes are "E" for the Engine Room, "I" for the Instrument Panel, and "B" for the Body).

Example:

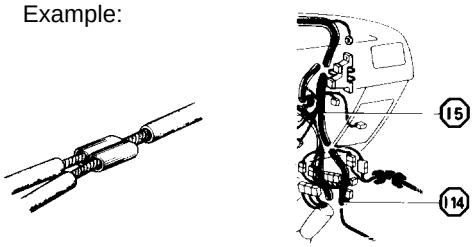

The Location of Splice Point I 5 is indicated by the shaded section.

Ⓛ : Page No.

Ⓜ : Indicates a shielded cable.

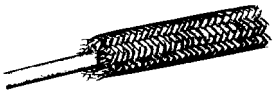

Ⓝ : Indicates a ground point.

The first letter of the code for each ground point(s) indicates the component's location, e.g., "E" for the Engine Compartment, "I" for the Instrument Panel and Surrounding area, and "B" for the Body and Surrounding area.

Ⓞ : Indicates the pin number of the connector.

The numbering system is different for female and male connectors.

Example:

Numbered in order from upper left to lower right

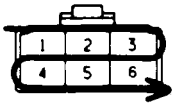

Female

Numbered in order from upper right to lower left

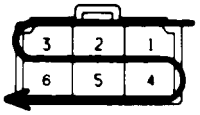

Male

Ⓟ : When 2 parts both use one connector in common, the parts connector name used in the wire routing section is shown in square brackets [ ].

Q

SYSTEM OUTLINE

WITH THE IGNITION SW TURNED ON, THE CURRENT FLOWS TO TERMINAL 3 OF THE POWER WINDOW MASTER SW, TERMINAL 2 OF THE POWER WINDOW CONTROL RELAY AND TERMINAL 8 OF THE POWER WINDOW SW THROUGH THE DOOR FUSE.

1. DRIVER'S WINDOW "MANUAL UP" OPERATION BY MASTER SW

HOLDING MANUAL SW (DRIVER'S) ON "UP" POSITION LOCATED IN POWER WINDOW MASTER SW, THE CURRENT FLOWS TO TERMINAL 5 OF THE POWER WINDOW CONTROL RELAY THROUGH TERMINAL 3 OF THE MASTER SW → TERMINAL 2 TO OPERATE A POWER WINDOW CONTROL RELAY. THUS THE CURRENT INSIDE THE RELAY FLOWS FROM TERMINAL 2 OF THE RELAY → TERMINAL 1 → TERMINAL 2 OF THE POWER WINDOW MOTOR → TERMINAL 1 → TERMINAL 4 OF THE RELAY → TERMINAL 3 → TO GROUND. THE MOTOR TURNS TO ASCENT THE WINDOW. RELEASING THIS SW, THE ROTATION OF MOTOR IS STOPPED AND THE WINDOWS CAN STOP AT WILL POINT.

(FOR THE "MANUAL DOWN" OPERATION, CURRENT FLOWS IN THE REVERSE DIRECTION BECAUSE THE TERMINALS WHERE IT FLOWS ARE CHANGED).

2. DRIVER'S WINDOW "AUTO DOWN" OPERATION BY MASTER SW

ONCE THE "AUTO DOWN" BUTTON OF THE MASTER SW IS PUSHED, THE CURRENT FLOWS TERMINAL 9 OF THE POWER WINDOW CONTROL RELAY THROUGH TERMINAL 3 OF THE MASTER SW → TERMINALS 8 AND 9 TO OPERATE THE RELAY. THUS THE CURRENT INSIDE THE POWER WINDOW CONTROL RELAY FLOWS FROM TERMINAL 2 OF THE RELAY → TERMINAL 4 → TERMINAL 1 OF THE POWER WINDOW MOTOR → TERMINAL 2 → TERMINAL 1 OF THE RELAY → TERMINAL 3 → TO GROUND. THE MOTOR CONTINUES THE ROTATION ENABLING TO DESCENT THE WINDOW.

THE WINDOW DESCENDS TO THE END POSITION. THE CURRENT WILL BE CUT OFF TO RELEASE THE AUTO DOWN FUNCTION BASED ON THE INCREASING CURRENT BETWEEN TERMINAL 2 OF THE RELAY AND TERMINAL 1 IN RELAY.

3. DRIVER'S WINDOW AUTO DOWN RELEASE OPERATION BY MASTER SW

HOLDING THE MANUAL SW (DRIVER'S) ON "UP" POSITION IN OPERATING AUTO DOWN. THE CURRENT FROM TERMINAL 3 OF THE MASTER SW PASSING TERMINAL 2 FLOWS TERMINAL 5 OF THE RELAY AND RELEASES THE AUTO DOWN FUNCTION IN THE POWER WINDOW CONTROL RELAY. RELEASING THE HAND FROM SW, WINDOW STOPS AND CONTINUING ON TOUCHING SW, THE FUNCTION SWITCHES TO MANUAL UP OPERATION.

4. PASSENGER'S WINDOW UP OPERATION (MASTER SW) AND WINDOW LOCK SW OPERATION

HOLDING PASSENGER'S WINDOW SW (MASTER SW) ON "UP", THE CURRENT FLOWS FROM TERMINAL 3 OF THE MASTER SW PASSING TERMINAL 6 TO TERMINAL 3 OF THE POWER WINDOW SW (PASSENGER'S) → TERMINAL 4 → TERMINAL 2 OF THE MOTOR → TERMINAL 1 → TERMINAL 9 OF THE POWER WINDOW SW → TERMINAL 7 → TERMINAL 1 OF THE MASTER SW → TERMINAL 4 TO GROUND. THE MOTOR RUNS TO ASCENT THE WINDOW. RELEASING THIS SW, THE ROTATION OF MOTOR IS STOPPED AND WINDOW CAN STOP AT WILL PLACE.

SWITCHING THE WINDOW LOCK SW IN "LOCK" POSITION, THE CIRCUIT IS OPENED AND STOPPED THE MOTOR ROTATION.

(FOR THE DOWN OPERATION, CURRENT FLOWS IN THE REVERSE DIRECTION BECAUSE THE TERMINALS WHERE IT FLOWS ARE CHANGED).

R

SERVICE HINTS

P 2 POWER WINDOW CONTROL RELAY

3–GROUND: ALWAYS CONTINUITY

2–GROUND: APPROX. **12** VOLTS WITH IGNITION SW AT **ON** POSITION

5–GROUND: APPROX. **12** VOLTS WITH IGNITION SW AT **ON** POSITION AND MASTER SW AT **UP** POSITION

8–GROUND: APPROX. **12** VOLTS WITH IGNITION SW AT **ON** POSITION AND MASTER SW AT **AUTO DOWN** POSITION

9–GROUND: APPROX. **12** VOLTS WITH IGNITION SW AT **ON** POSITION AND MASTER SW AT **DOWN** OR **AUTO DOWN** POSITION

P 4 POWER WINDOW MASTER SW

4–GROUND: ALWAYS CONTINUITY

3–GROUND: APPROX. **12** VOLTS WITH IGNITION SW AT **ON** POSITION

WINDOW LOCK SW

OPEN WITH THE WINDOW LOCK SW AT **LOCK** POSITION

S

: PARTS LOCATION

CODE	SEE PAGE	CODE	SEE PAGE	CODE	SEE PAGE
P 2	21	**P 4**	21	**P 6**	21
P 3	21	**P 5**	21		

T

: RELAY BLOCKS

CODE	SEE PAGE	RELAY BLOCK (RELAY BLOCK LOCATION)
1	16	R/B NO. 1 (INSTRUMENT PANEL LEFT SIDE)

U

: JUNCTION BLOCK AND WIRE HARNESS CONNECTOR

CODE	SEE PAGE	JUNCTION BLOCK AND WIRE HARNESS (CONNECTOR LOCATION)
3B	14	J/B NO. 3 AND COWL WIRE (INSTRUMENT PANEL LEFT SIDE)

V

: CONNECTOR JOINING WIRE HARNESS AND WIRE HARNESS

CODE	SEE PAGE	JOINING WIRE HARNESS AND WIRE HARNESS (CONNECTOR LOCATION)
ID1	26	FRONT DOOR RH WIRE AND COWL WIRE (RIGHT KICK PANEL)
IH1	26	FRONT DOOR LH WIRE AND COWL WIRE (LEFT KICK PANEL)

W

: GROUND POINTS

CODE	SEE PAGE	GROUND POINT LOCATION
IC	24	COWL LEFT

X

: SPLICE POINTS

CODE	SEE PAGE	WIRE HARNESSES WITH SPLICE POINTS
I 5	24	COWL WIRE

Ⓠ : Explains the system outline.

Ⓡ : Indicates values or explains the function for reference during troubleshooting.

Ⓢ : Indicates the reference page showing the position on the vehicle of the parts in the system circuit.

Example: Part “P4” (Power Window Master SW) is on page 21 of the manual.

* The letter in the code is from the first letter of the part, and the number indicates its order in parts starting with that letter.

Example: P 4

Part is 4th in order

Power Window Master SW

Ⓣ : Indicates the reference page showing the position on the vehicle of Relay Block Connectors in the system circuit.

Example: Connector “1” is described on page 16 of this manual and is installed on the left side of the instrument panel.

Ⓤ : Indicates the reference page showing the position on the vehicle of J/B and Wire Harness in the system circuit.

Example: Connector “3B”connects the Cowl Wire and J/B No. 3. It is described on page 14 of this manual, and is installed on the instrument panel left side.

Ⓥ : Indicates the reference page describing the wiring harness and wiring harness connector (the female wiring harness is shown first, followed by the male wiring harness).

Example: Connector “ID1”connects the front door RH wire (female) and cowl wire (male). It is described on page 26 of this manual, and is installed on the right side kick panel.

Ⓦ : Indicates the reference page showing the position of the ground points on the vehicle.

Example: Ground point “IC” is described on page 24 of this manual and is installed on the cowl left side.

Ⓧ : Indicates the reference page showing the position of the splice points on the vehicle.

Example: Splice point “I 5” is on the Cowl Wire Harness and is described on page 24 of this manual.

HINT:

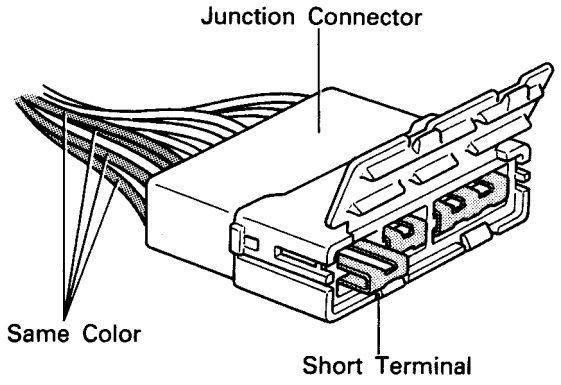

Junction connector (code: J1, J2, J3, J4, J5, J6, J7, J8, J9) in this manual include a short terminal which is connected to a number of wire harnesses. Always perform inspection with the short terminal installed. (When installing the wire harnesses, the harnesses can be connected to any position within the short terminal grouping. Accordingly, in other vehicles, the same position in the short terminal may be connected to a wire harness from a different part.)

Wire harness sharing the same short terminal grouping have the same color.

The “Current Flow Chart” section, describes which parts each power source (fuses, fusible links, and circuit breakers) transmits current to. In the Power Source circuit diagram, the conditions when battery power is supplied to each system are explained. Since all System Circuit diagrams start from the power source, the power source system must be fully understood.

POWER SOURCE (Current Flow Chart)

The chart below shows the route by which current flows from the battery to each electrical source (Fusible Link, Circuit Breaker, Fuse, etc.) and other parts.

The next page and following pages show the parts to which each electrical source outputs current.

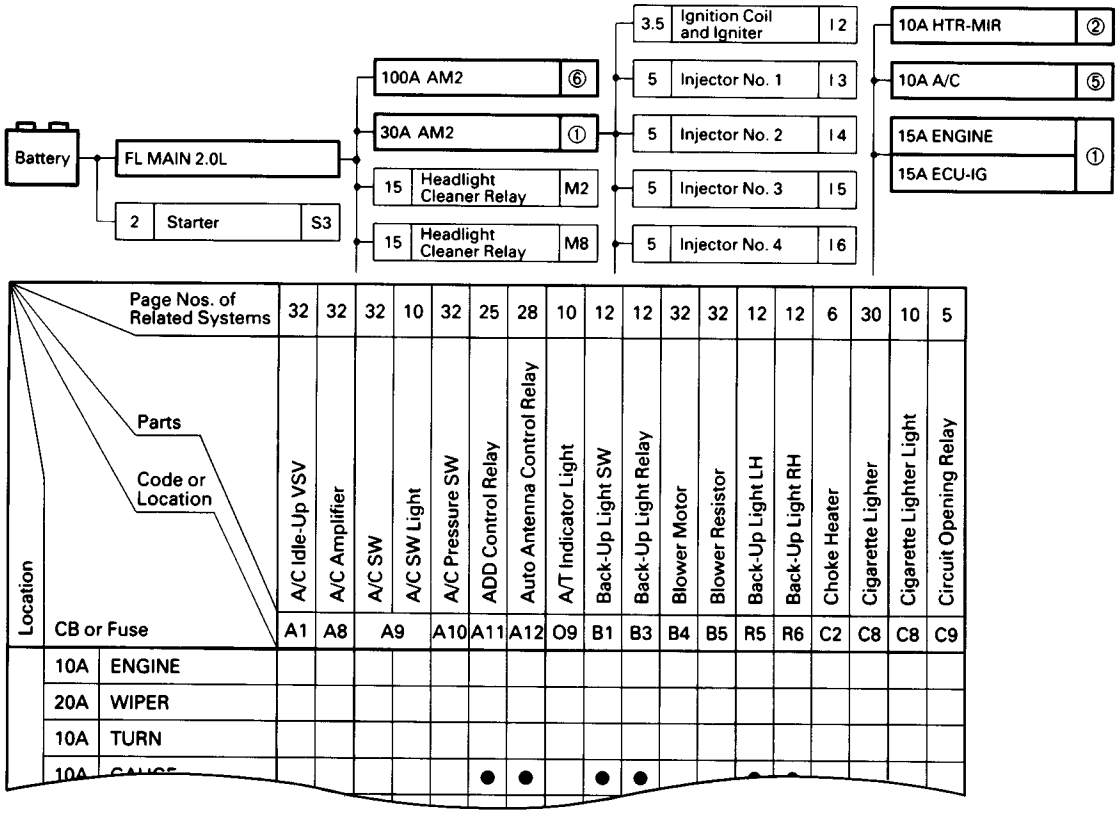

POWER SOURCE

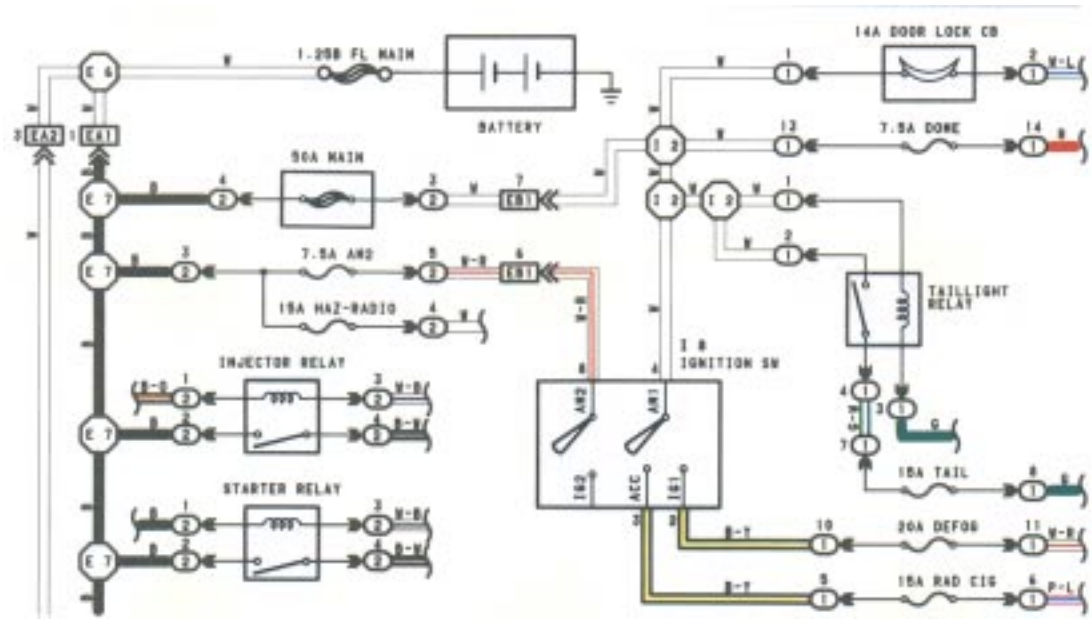

* The system shown here is an EXAMPLE ONLY. It is different to the actual circuit shown in the SYSTEM CIRCUITS SECTION.

The ground points circuit diagram shows the connections from all major parts to the respective ground points. When troubleshooting a faulty ground point, checking the system circuits which use a common ground may help you identify the problem ground quickly. The relationship between ground points (EA , IB , and IC shown below) can also be checked this way.

GROUND POINTS

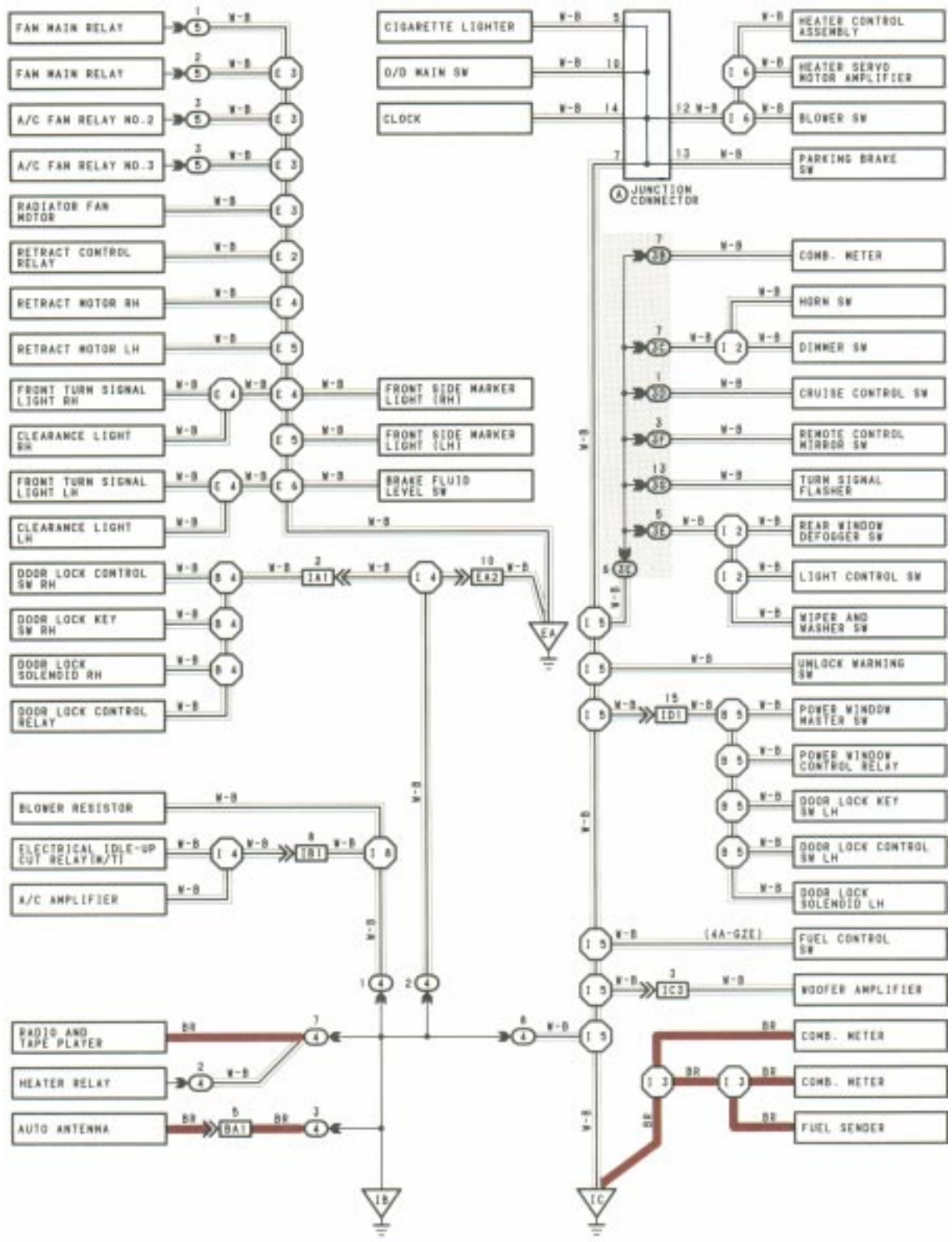

* The system shown here is an EXAMPLE ONLY. It is different to the actual circuit shown in the SYSTEM CIRCUITS SECTION.

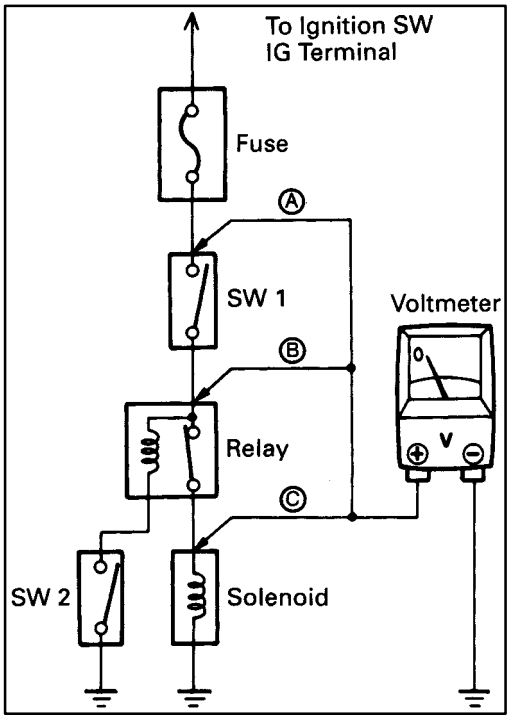

VOLTAGE CHECK

(a) Establish conditions in which voltage is present at the check point.

Example:

Ⓐ – Ignition SW on

Ⓑ – Ignition SW and SW 1 on

Ⓒ – Ignition SW, SW 1 and Relay on (SW 2 off)

(b) Using a voltmeter, connect the negative lead to a good ground point or negative battery terminal, and the positive lead to the connector or component terminal. This check can be done with a test light instead of a voltmeter.

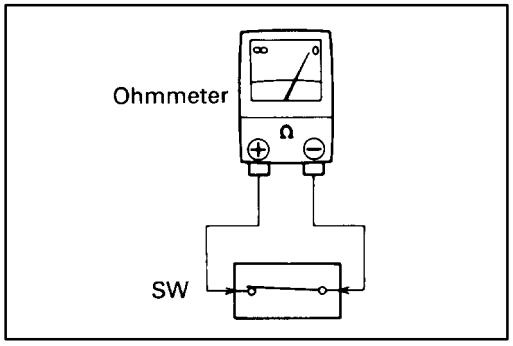

CONTINUITY AND RESISTANCE CHECK

(a) Disconnect the battery terminal or wire so there is no voltage between the check points.

(b) Contact the two leads of an ohmmeter to each of the check points.

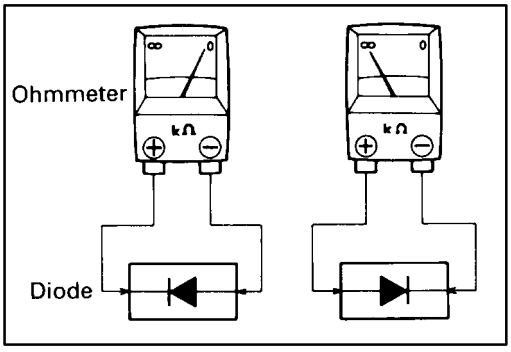

If the circuit has diodes, reverse the two leads and check again.

When contacting the negative lead to the diode positive side and the positive lead to the negative side, there should be continuity.

When contacting the two leads in reverse, there should be no continuity.

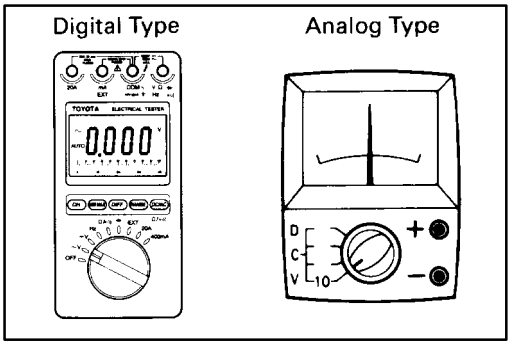

(c) Use a volt/ohmmeter with high impedance (10 kΩ/V minimum) for troubleshooting of the electrical circuit.

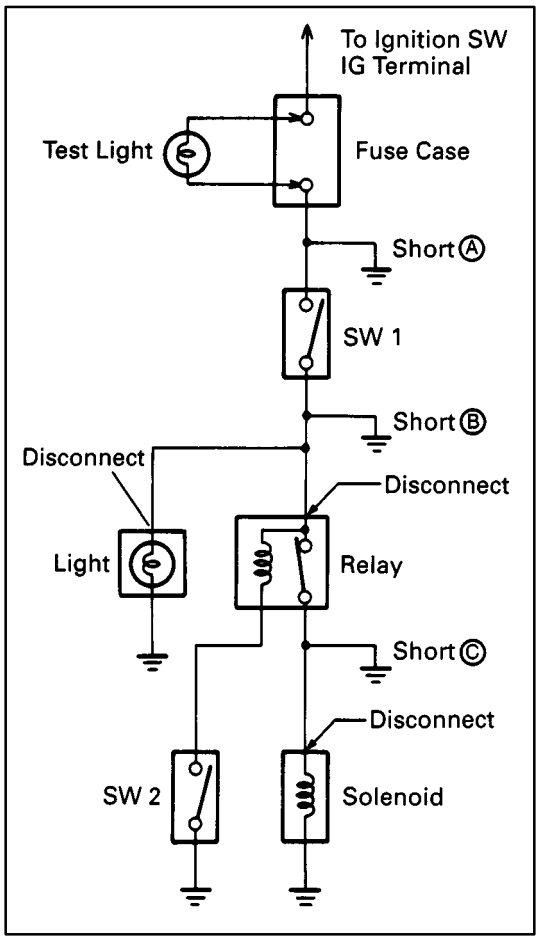

FINDING A SHORT CIRCUIT

(a) Remove the blown fuse and disconnect all loads of the fuse.

(b) Connect a test light in place of the fuse.

(c) Establish conditions in which the test light comes on.

Example:

Ⓐ – Ignition SW on

Ⓑ – Ignition SW and SW 1 on

Ⓒ – Ignition SW, SW 1 and Relay on (Connect the Relay) and SW 2 off (or Disconnect SW 2)

(d) Disconnect and reconnect the connectors while watching the test light.

The short lies between the connector where the test light stays lit and the connector where the light goes out.

(e) Find the exact location of the short by lightly shaking the problem wire along the body.

CAUTION:

(a) Do not open the cover or the case of the ECU unless absolutely necessary. (If the IC terminals are touched, the IC may be destroyed by static electricity.)

(b) When replacing the internal mechanism (ECU part) of the digital meter, be careful that no part of your body or clothing comes in contact with the terminals of leads from the IC, etc. of the replacement part (spare part).

DISCONNECTION OF MALE AND FEMALE CONNECTORS

To pull apart the connectors, pull on the connector itself, not the wire harness.

HINT: Check to see what kind of connector you are disconnecting before pulling apart.

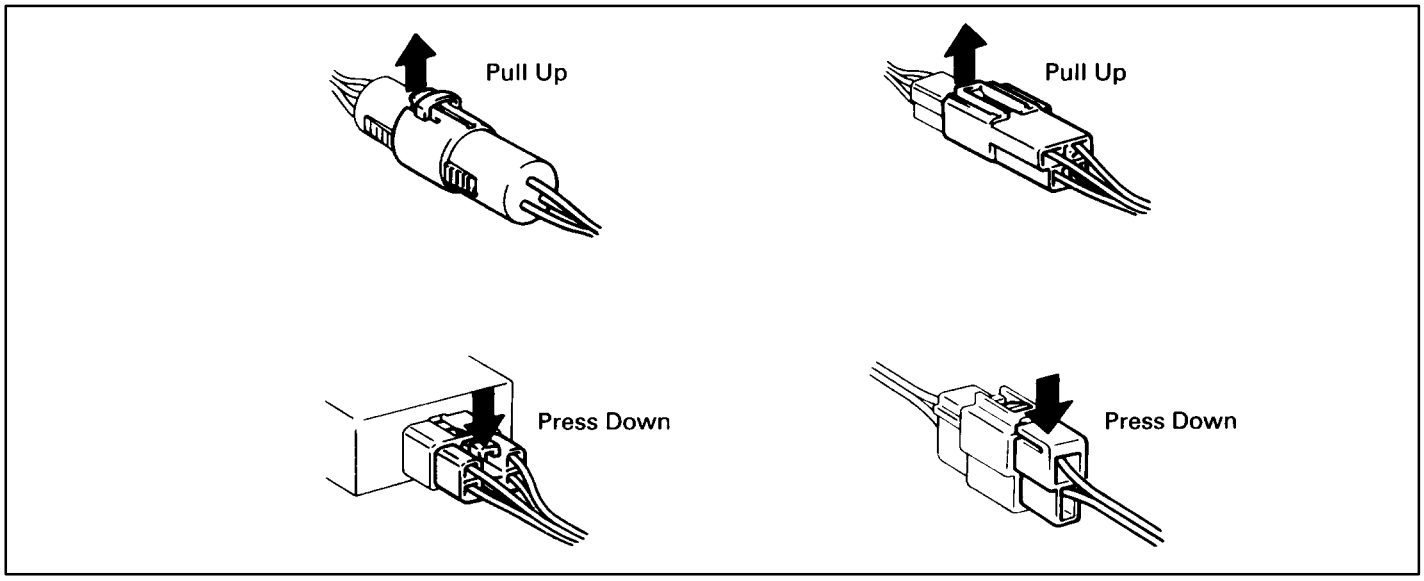

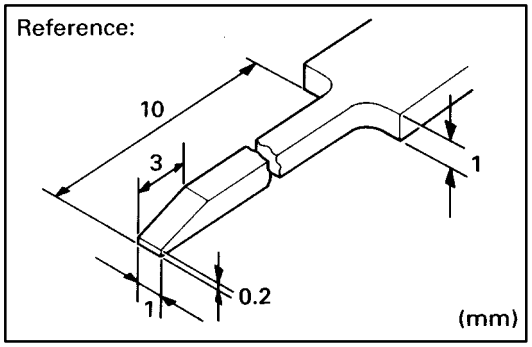

HOW TO REPLACE TERMINAL

(with terminal retainer or secondary locking device)

1. PREPARE THE SPECIAL TOOL

   HINT: To remove the terminal from the connector, please construct and use the special tool or like object shown on the left.

2. DISCONNECT CONNECTOR

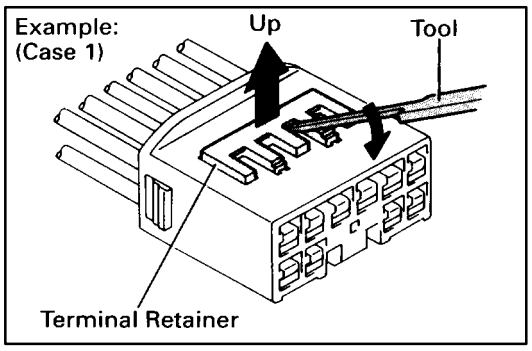

3. DISENGAGE THE SECONDARY LOCKING DEVICE OR TERMINAL RETAINER.

   (a) Locking device must be disengaged before the terminal locking clip can be released and the terminal removed from the connector.

   (b) Use a special tool or the terminal pick to unlock the secondary locking device or terminal retainer.

NOTICE:

Do not remove the terminal retainer from connector body.

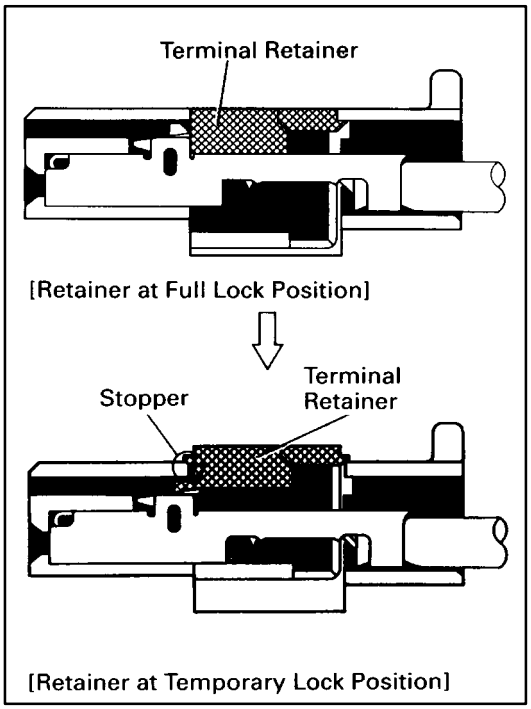

Ⓐ For Non–Waterproof Type Connector

HINT: The needle insertion position varies according to the connector's shape (number of terminals etc.), so check the position before inserting it.

"Case 1"

Raise the terminal retainer up to the temporary lock position.

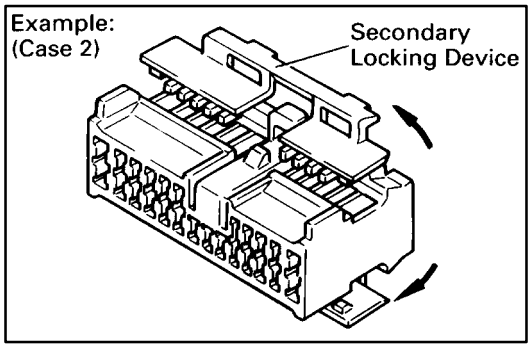

"Case 2"

Open the secondary locking device.

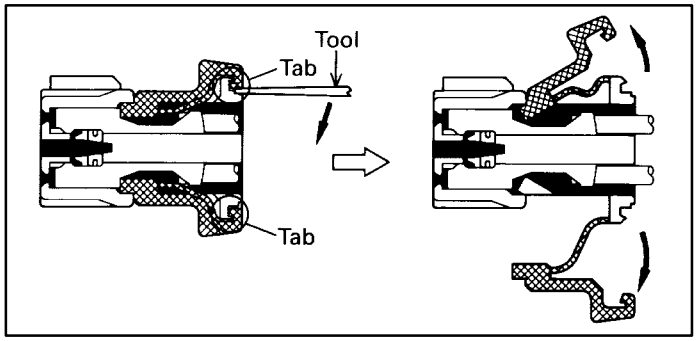

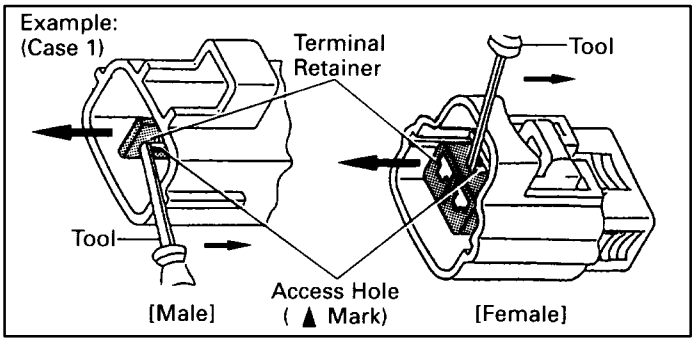

Ⓑ For Waterproof Type Connector

HINT: Terminal retainer color is different according to connector body.

Example:

Terminal Retainer	Connector Body
Black or White	: Gray
Black or White	: Dark Gray
Gray or White	: Black

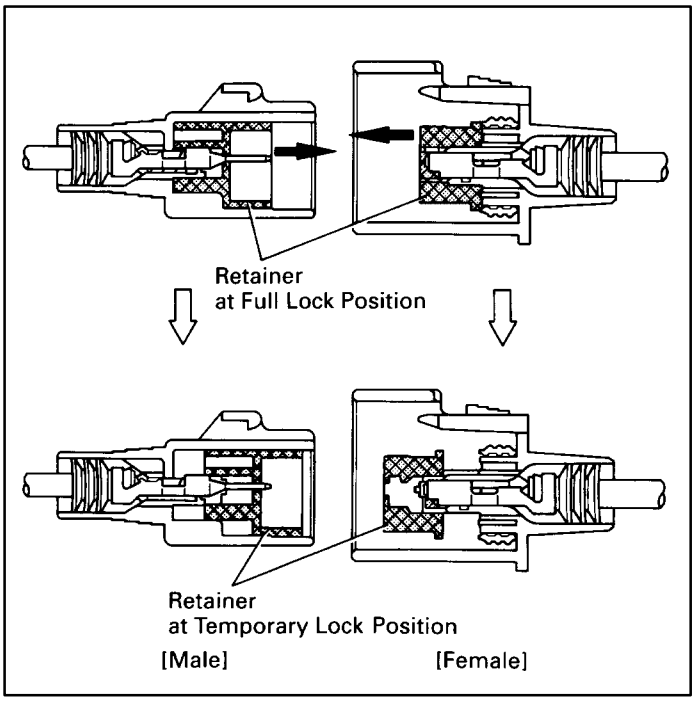

"Case 1"

Type where terminal retainer is pulled up to the temporary lock position (Pull Type).

Insert the special tool into the terminal retainer access hole (▲ Mark) and pull the terminal retainer up to the temporary lock position.

HINT: The needle insertion position varies according to the connector's shape (Number of terminals etc.), so check the position before inserting it.

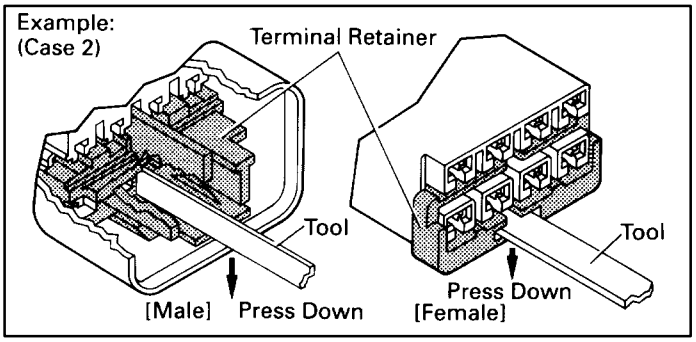

"Case 2"

Type which cannot be pulled as far as Power Lock insert the tool straight into the access hole of terminal retainer as shown.

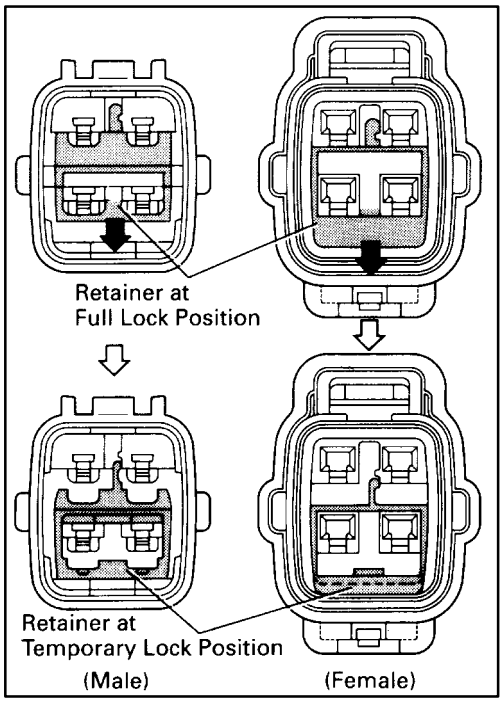

Push the terminal retainer down to the temporary lock position.

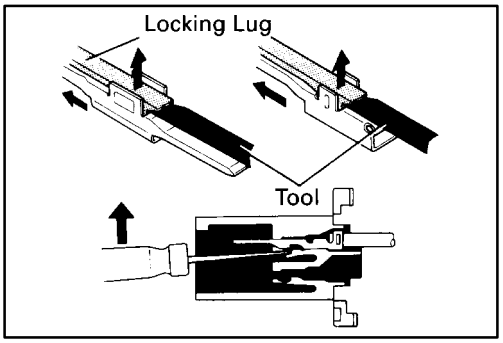

(c) Release the locking lug from terminal and pull the terminal out from rear.

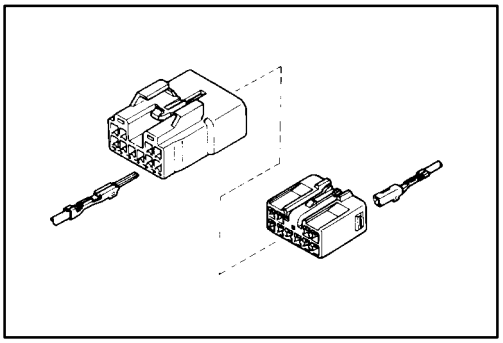

4. INSTALL TERMINAL TO CONNECTOR

(a) Insert the terminal.

HINT:

1. Make sure the terminal is positioned correctly.
2. Insert the terminal until the locking lug locks firmly.
3. Insert the terminal with terminal retainer in the temporary lock position.

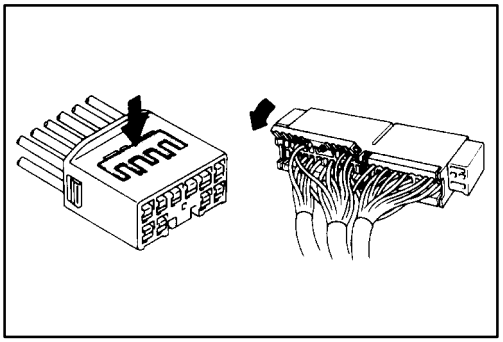

(b) Push the secondary locking device or terminal retainer in to the full lock position.

5. CONNECT CONNECTOR

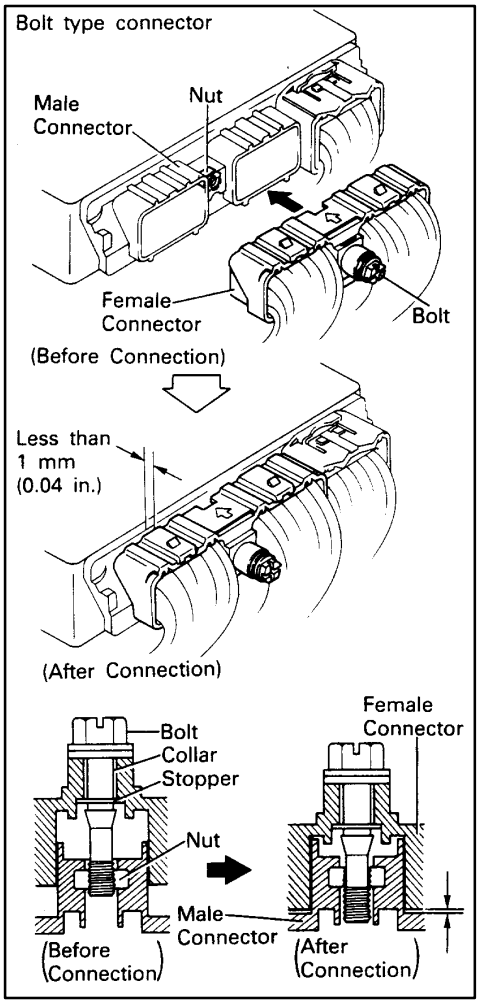

DISCONNECTION AND CONNECTION OF BOLT TYPE CONNECTORS

For engine control module (engine and electronically controlled transmission ECU) in this vehicle, connectors are used which require a bolt built into the connector to be screwed down to securely connect the connector.

1. Disconnect the connector

   After completely loosening the bolt, the two parts of the connector can be separated.

   NOTICE:

   Do not pull the wire harness when disconnecting the connector.

2. Connect the connector

   NOTICE:

   Before connecting the connector, always check that the terminals are not bent or damaged.

   (a) Match the guide section of the male connector correctly with the female connector, then press them together.

   (b) Tighten the bolt.

   Make sure the connectors are completely connected, by tightening the bolt until there is a clearance of less than 1 mm (0.04 in.) between the bottom of male connector and the end of female connector.

ABBREVIATIONS

The following abbreviations are used in this manual.

ABS	=	Anti–Lock Brake System	O/D	=	Overdrive
A/C	=	Air Conditioning	PPS	=	Progressive Power Steering
ACIS	=	Acoustic Control Induction System	R/B	=	Relay Block
A/T	=	Automatic Transmission	RH	=	Right–Hand
COMB.	=	Combination	SFI	=	Sequential Multiport Fuel Injection
ECU	=	Electronic Control Unit	SRS	=	Supplemental Restraint System
EFI	=	Electronic Fuel Injection	SW	=	Switch
EGR	=	Exhaust Gas Recirculation	TDCL	=	Total Diagnostic Communication Link
EVAP	=	Evaporative Emission	TEMP.	=	Temperature
ISC	=	Idle Speed Control	TRAC	=	Traction Control System
J/B	=	Junction Block	VSV	=	Vacuum Switching Valve
LH	=	Left-Hand	w/	=	With
M/T	=	Manual Transmission	w/o	=	Without

* The titles given inside the components are the names of the terminals (terminal codes) and are not treated as being abbreviations.

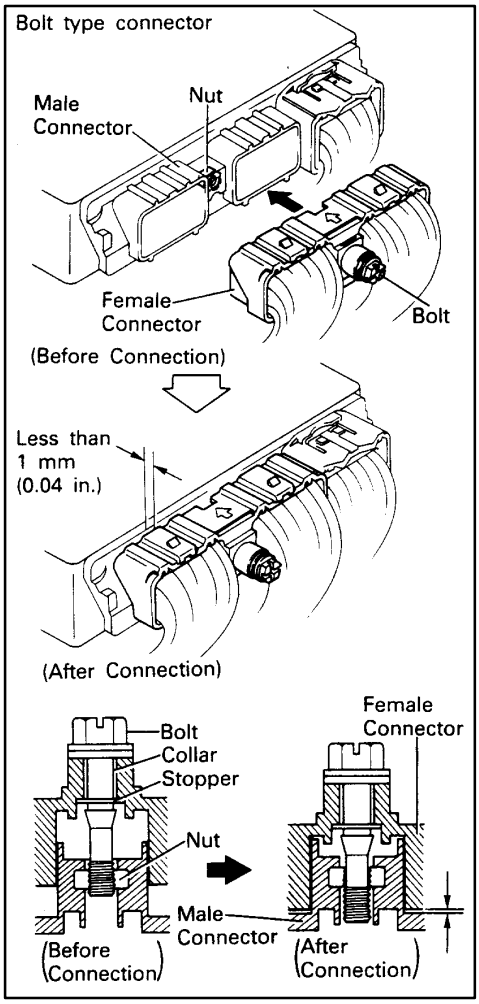

DISCONNECTION AND CONNECTION OF BOLT TYPE CONNECTORS

For engine control module (engine and electronically controlled transmission ECU) in this vehicle, connectors are used which require a bolt built into the connector to be screwed down to securely connect the connector.

1. Disconnect the connector

   After completely loosening the bolt, the two parts of the connector can be separated.

   NOTICE:

   Do not pull the wire harness when disconnecting the connector.

2. Connect the connector

   NOTICE:

   Before connecting the connector, always check that the terminals are not bent or damaged.

   (a) Match the guide section of the male connector correctly with the female connector, then press them together.

   (b) Tighten the bolt.

   Make sure the connectors are completely connected, by tightening the bolt until there is a clearance of less than 1 mm (0.04 in.) between the bottom of male connector and the end of female connector.

ABBREVIATIONS

The following abbreviations are used in this manual.

ABS	=	Anti–Lock Brake System	O/D	=	Overdrive
A/C	=	Air Conditioning	PPS	=	Progressive Power Steering
ACIS	=	Acoustic Control Induction System	R/B	=	Relay Block
A/T	=	Automatic Transmission	RH	=	Right–Hand
COMB.	=	Combination	SFI	=	Sequential Multiport Fuel Injection
ECU	=	Electronic Control Unit	SRS	=	Supplemental Restraint System
EFI	=	Electronic Fuel Injection	SW	=	Switch
EGR	=	Exhaust Gas Recirculation	TDCL	=	Total Diagnostic Communication Link
EVAP	=	Evaporative Emission	TEMP.	=	Temperature
ISC	=	Idle Speed Control	TRAC	=	Traction Control System
J/B	=	Junction Block	VSV	=	Vacuum Switching Valve
LH	=	Left-Hand	w/	=	With
M/T	=	Manual Transmission	w/o	=	Without

* The titles given inside the components are the names of the terminals (terminal codes) and are not treated as being abbreviations.

GLOSSARY OF TERMS AND SYMBOLS

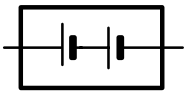

BATTERY

Stores chemical energy and converts it into electrical energy. Provides DC current for the auto's various electrical circuits.



CAPACITOR (Condenser)

A small holding unit for temporary storage of electrical voltage.



CIGARETTE LIGHTER

An electric resistance heating element.

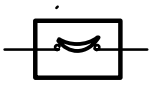

CIRCUIT BREAKER

Basically a reusable fuse, a circuit breaker will heat and open if too much current flows through it. Some units automatically reset when cool, others must be manually reset.



DIODE

A semiconductor which allows current flow in only one direction.



DIODE, ZENER

A diode which allows current flow in one direction but blocks reverse flow only up to a specific voltage. Above that potential, it passes the excess voltage. This acts as a simple voltage regulator.



DISTRIBUTOR, IIA

Channels high–voltage current from the ignition coil to the individual spark plugs.



FUSE

A thin metal strip which burns through when too much current flows through it, thereby stopping current flow and protecting a circuit from damage.

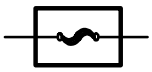

(for Medium Current Fuse)

FUSIBLE LINK

A heavy–gauge wire placed in high amperage circuits which burns through on overloads, thereby protecting the circuit. The numbers indicate the cross–section surface area of the wires.



(for High Current Fuse or Fusible Link.)



GROUND

The point at which wiring attaches to the Body, thereby providing a return path for an electrical circuit; without a ground, current cannot flow.

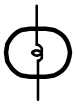

HEADLIGHTS

1. SINGLE FILAMENT

Current flow causes a headlight filament to heat up and emit light. A headlight may have either a single (1) filament or a double (2) filament.



2. DOUBLE FILAMENT



HORN

An electric device which sounds a loud audible signal.

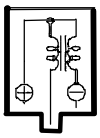

IGNITION COIL

Converts low–voltage DC current into high–voltage ignition current for firing the spark plugs.



LIGHT

Current flow through a filament causes the filament to heat up and emit light.



LED (LIGHT EMITTING DIODE)

Upon current flow, these diodes emit light without producing the heat of a comparable light.



METER, ANALOG

Current flow activates a magnetic coil which causes a needle to move, thereby providing a relative display against a background calibration.



METER, DIGITAL

Current flow activates one or many LED's, LCD's, or fluorescent displays, which provide a relative or digital display.



MOTOR

A power unit which converts electrical energy into mechanical energy, especially rotary motion.

RELAY

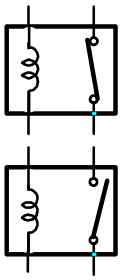

1. NORMALLY CLOSED

2. NORMALLY OPEN

Basically, an electrically operated switch which may be normally closed (1) or open (2).

Current flow through a small coil creates a magnetic field which either opens or closes an attached switch.

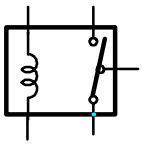

RELAY, DOUBLE THROW

A relay which passes current through one set of contacts or the other.



RESISTOR

An electrical component with a fixed resistance, placed in a circuit to reduce voltage to a specific value.



RESISTOR, TAPPED

A resistor which supplies two or more different non adjustable resistance values.

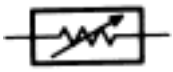

RESISTOR, VARIABLE or RHEOSTAT

A controllable resistor with a variable rate of resistance. Also called a potentiometer or rheostat.

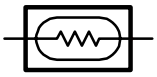

SENSOR (Thermistor)

A resistor which varies its resistance with temperature.



SENSOR, ANALOG SPEED

Uses magnetic impulses to open and close a switch to create a signal for activation of other components.

SHORT PIN

Used to provide an unbroken connection within a junction block.



SOLENOID

An electromagnetic coil which forms a magnetic field when current flows, to move a plunger, etc.



SPEAKER

An electromechanical device which creates sound waves from current flow.

SWITCH, MANUAL

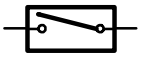

1. NORMALLY OPEN

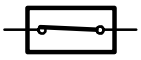

2. NORMALLY CLOSED

Opens and closes circuits, thereby stopping (1) or allowing (2) current flow.

SWITCH, DOUBLE THROW

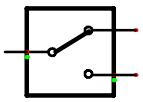

A switch which continuously passes current through one set of contacts or the other.

SWITCH, IGNITION

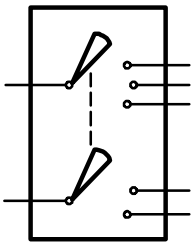

A key operated switch with several positions which allows various circuits, particularly the primary ignition circuit, to become operational.

SWITCH, WIPER PARK

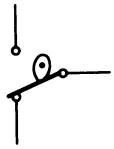

Automatically returns wipers to the stop position when the wiper switch is turned off.

TRANSISTOR

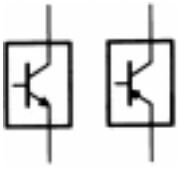

A solidstate device typically used as an electronic relay; stops or passes current depending on the voltage applied at “base.”

WIRES



(1) NOT CONNECTED

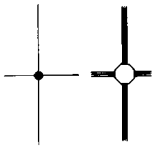

(2) SPLICED

Wires are always drawn as straight lines on wiring diagrams. Crossed wires (1) without a black dot at the junction are not joined; crossed wires (2) with a black dot or octagonal (◯) mark at the junction are spliced (joined) connections.

RELAY LOCATIONS

[Engine Compartment]

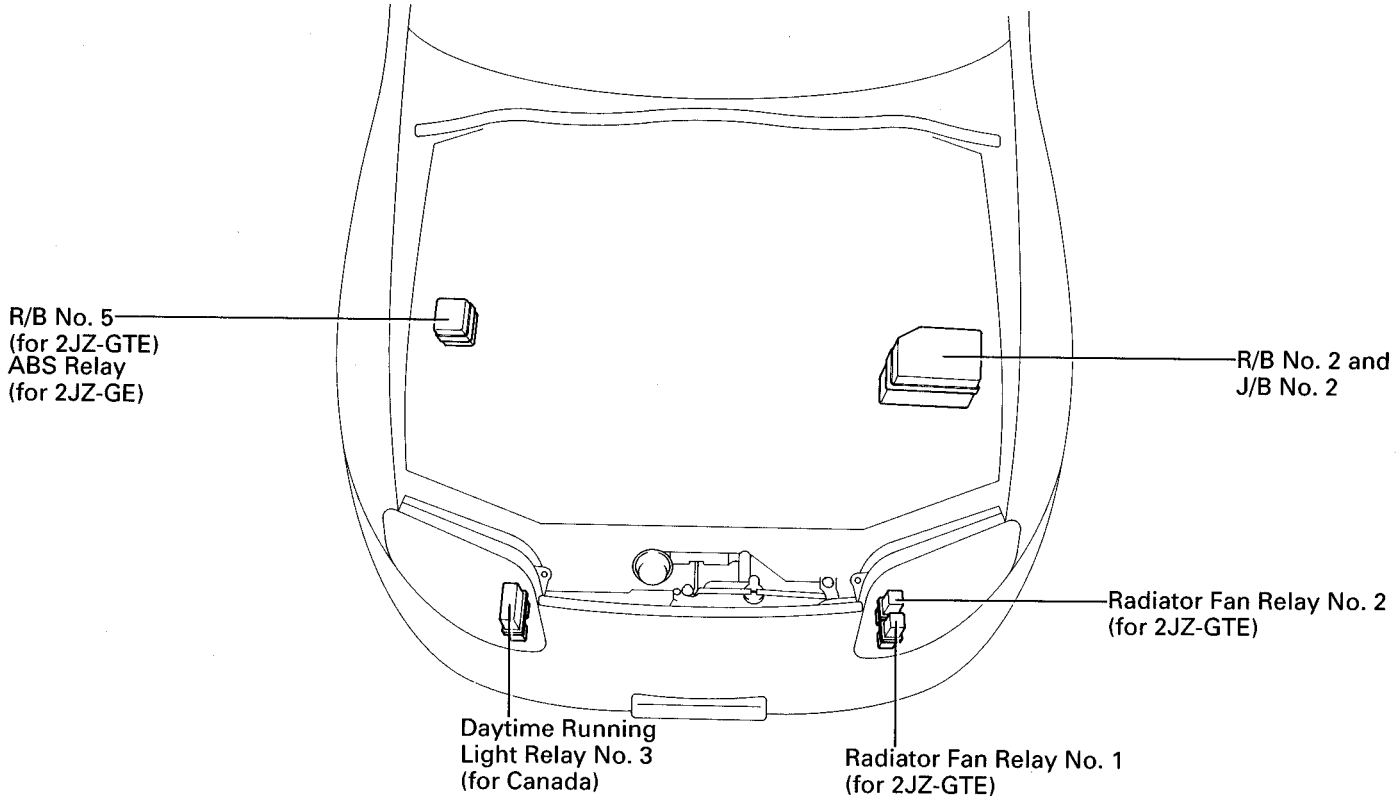

[Instrument Panel]

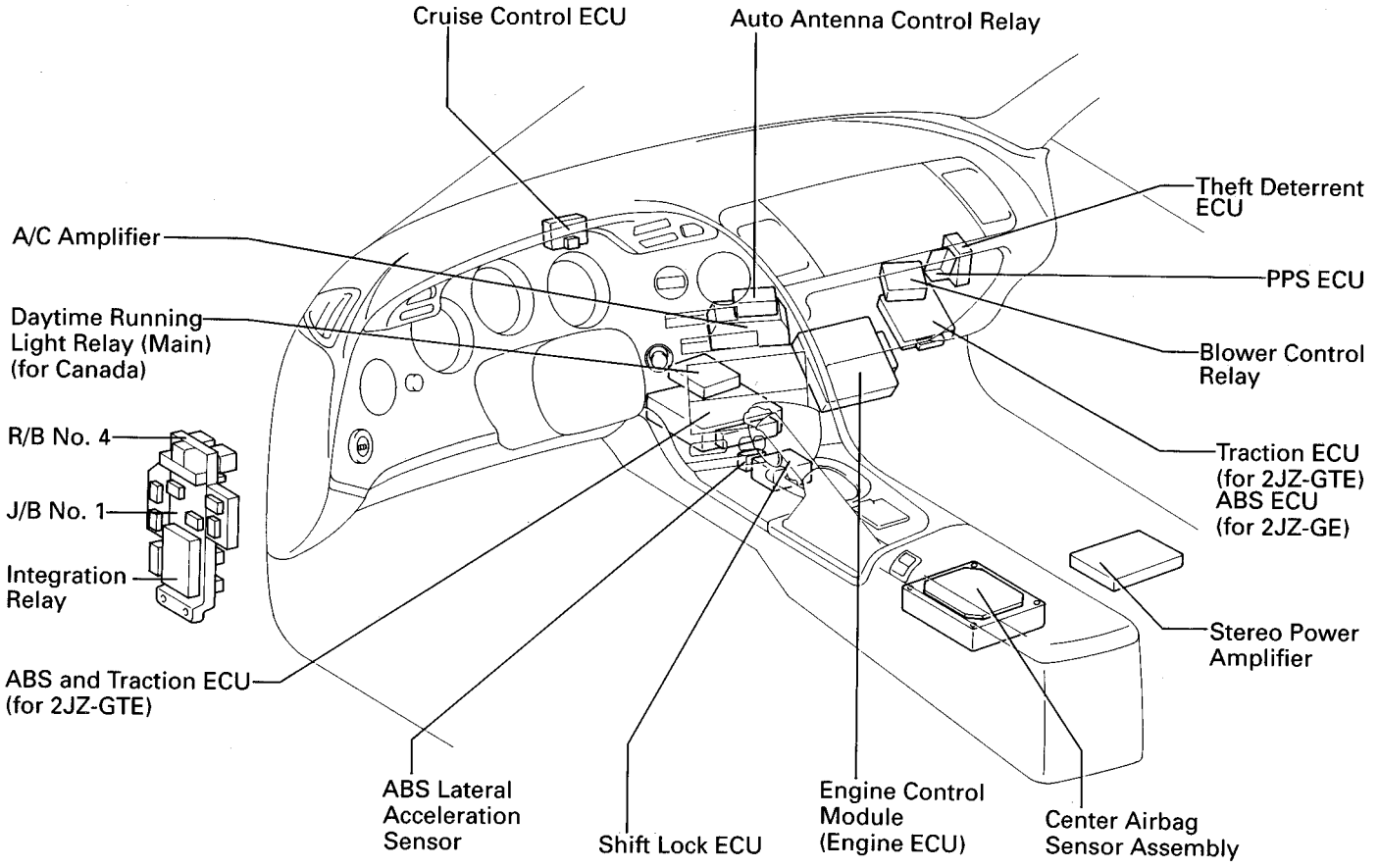

[Body]

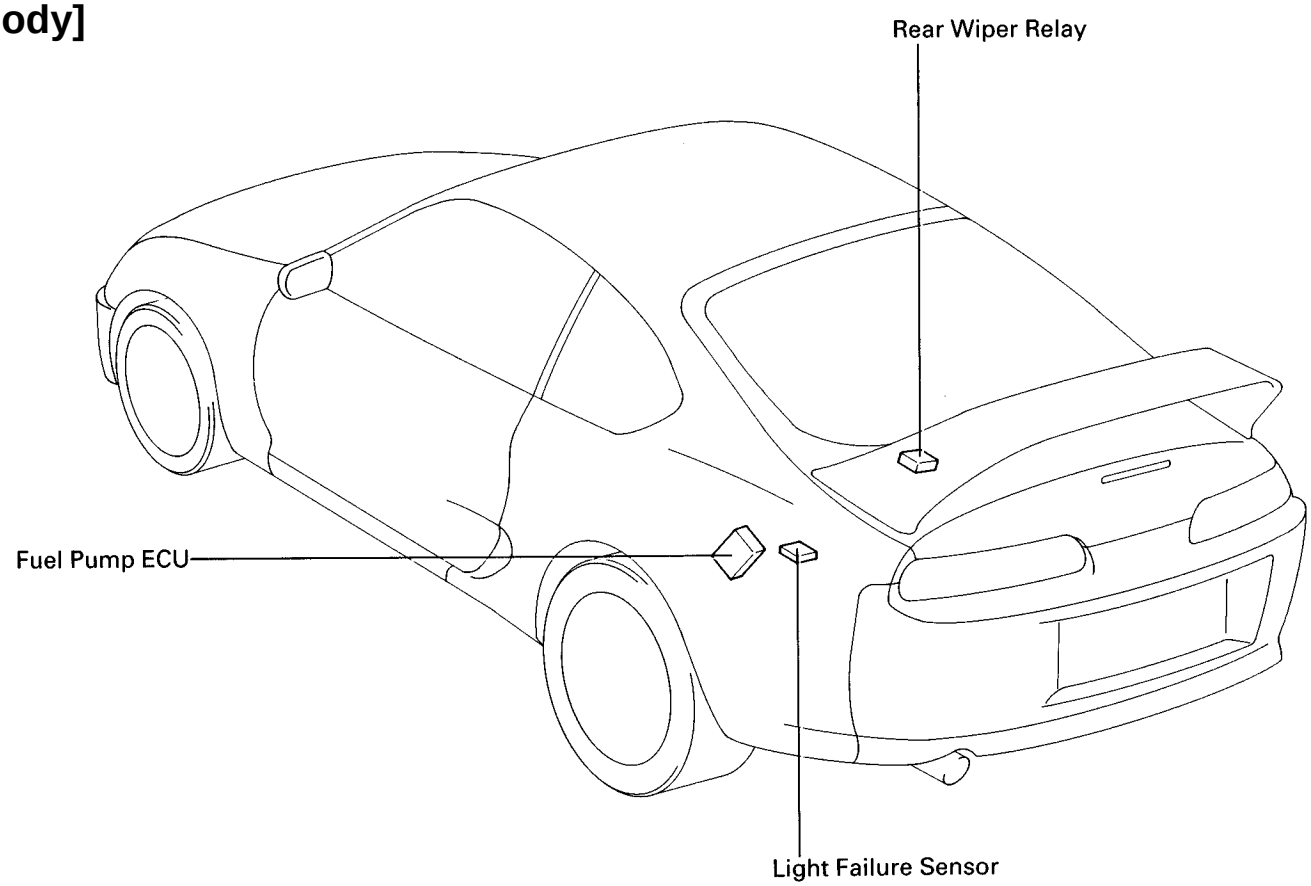
Rear Wiper Relay
Fuel Pump ECU
Light Failure Sensor

[Seat]

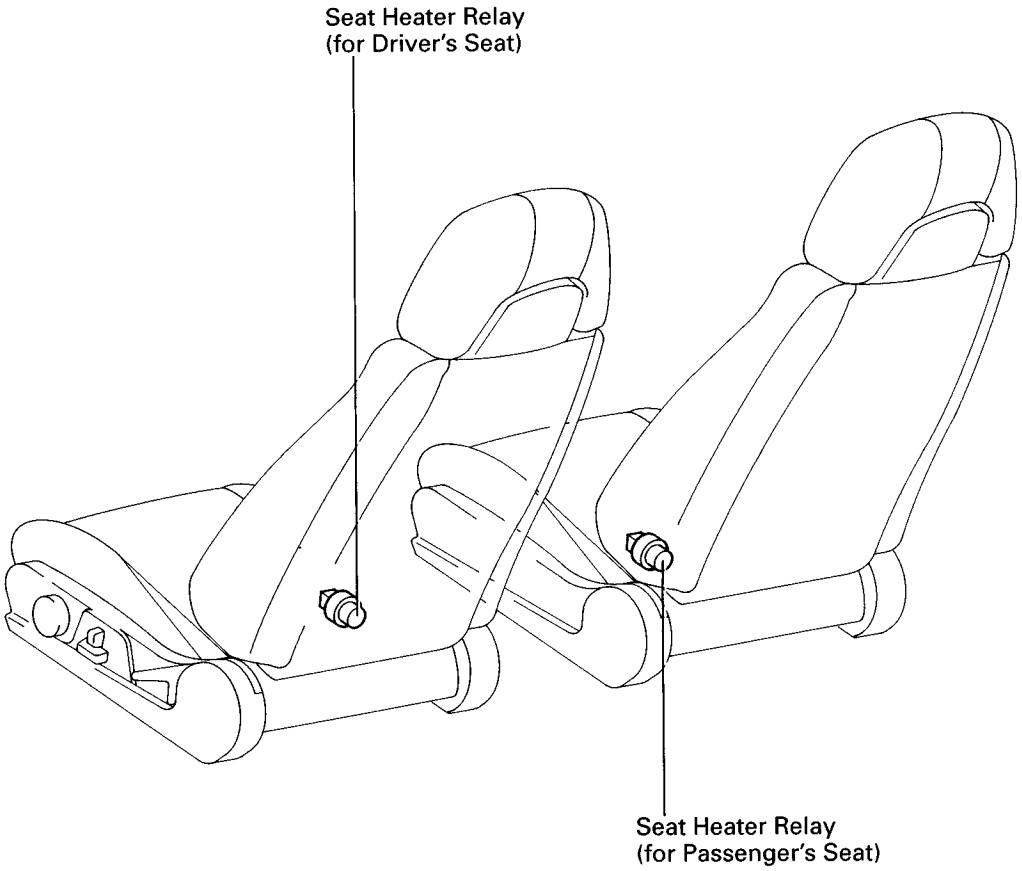
Seat Heater Relay
(for Driver's Seat)
Seat Heater Relay
(for Passenger's Seat)

RELAY LOCATIONS

⬭ : J/B No. 1	**Left Kick Panel** (See Page 18)

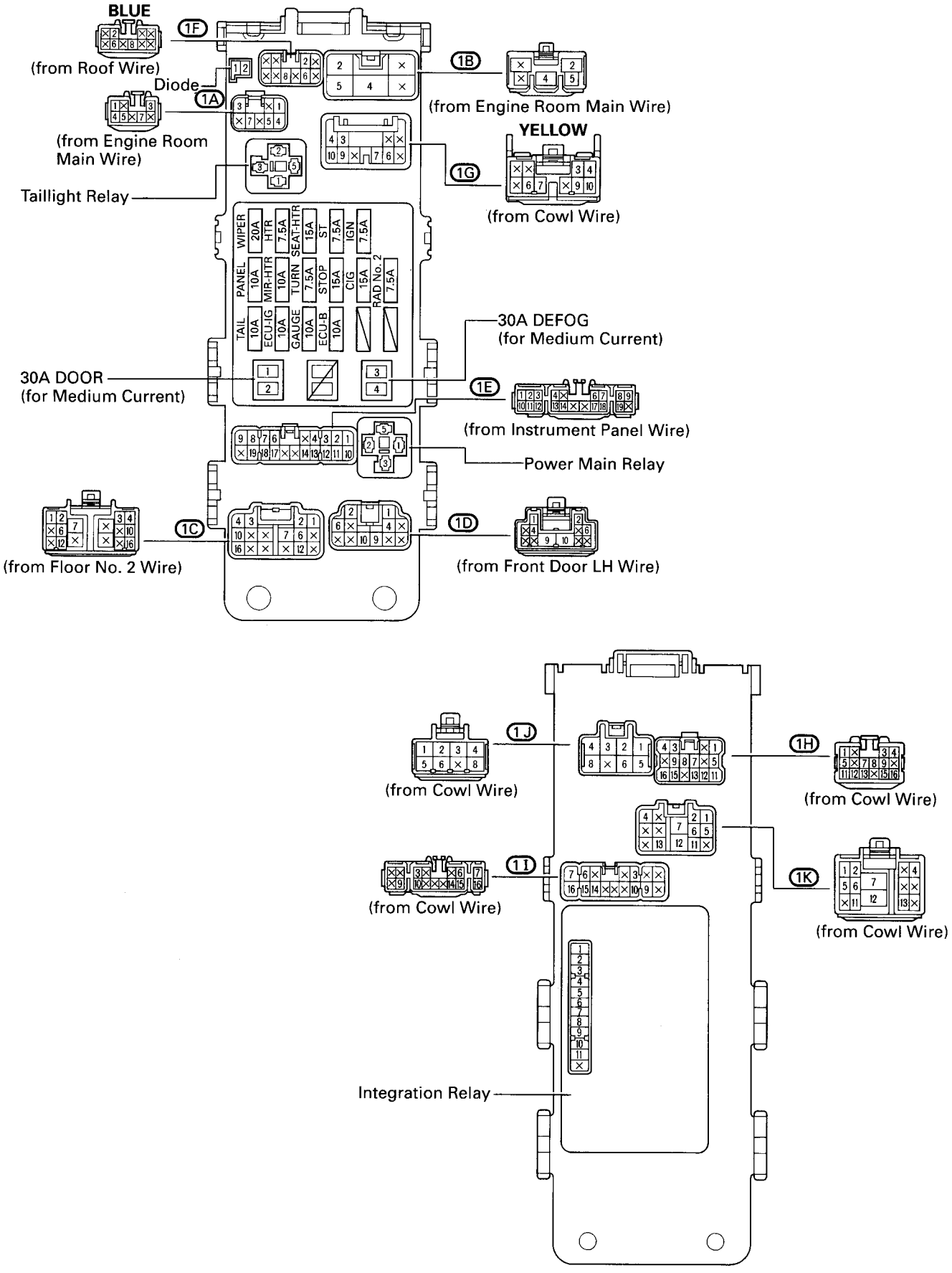

[J/B No. 1 Inner Circuit]

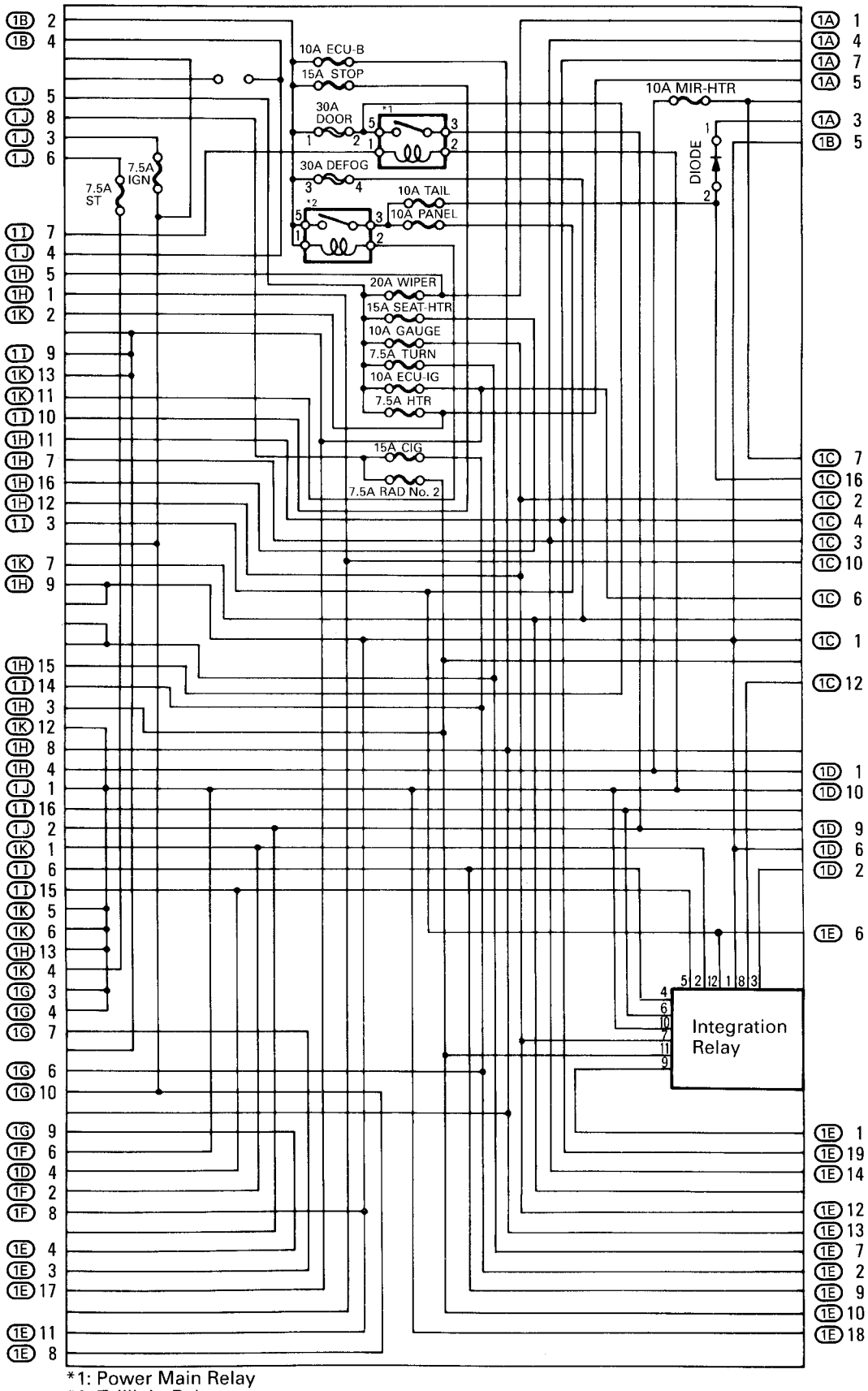

*1: Power Main Relay
*2: Taillight Relay

RELAY LOCATIONS

② : R/B No. 2 ⬭ : J/B No. 2	**Engine Compartment Left** (See Page 18)

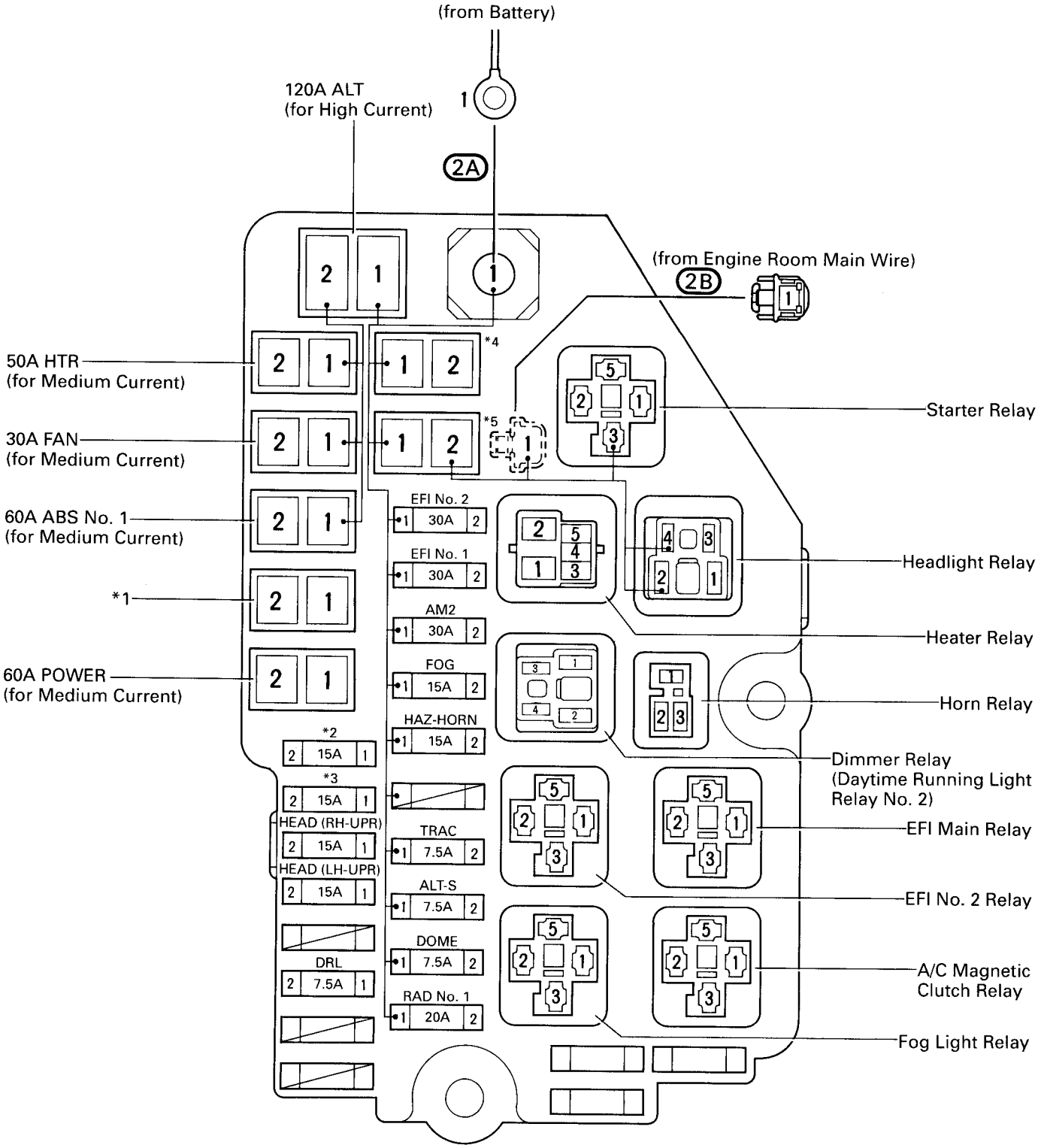

*1: { 50A AM1 (for Medium Current) (for USA)
60A AM1 (for Medium Current) (for CANADA)

*2: { HEAD (RH) (for USA)
HEAD (RH-LWR) (for CANADA)

*3: { HEAD (LH) (for USA)
HEAD (LH-LWR) (for CANADA)

*4: 30A ABS No. 2
(for Medium Current)

*5: 50A MAIN
(for Medium Current)

④ : R/B No. 4	Left Kick Panel (See Page 18)

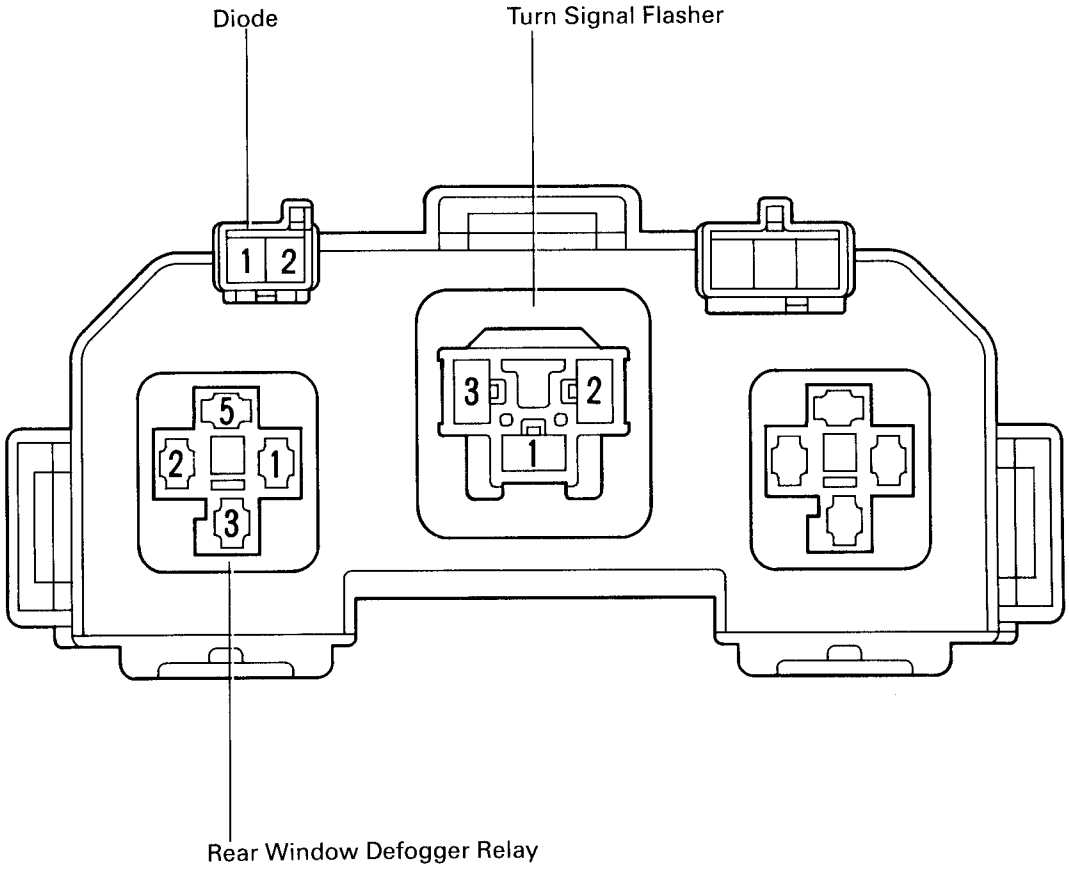

⑤ : R/B No. 5	Engine Compartment Right (See Page 18)

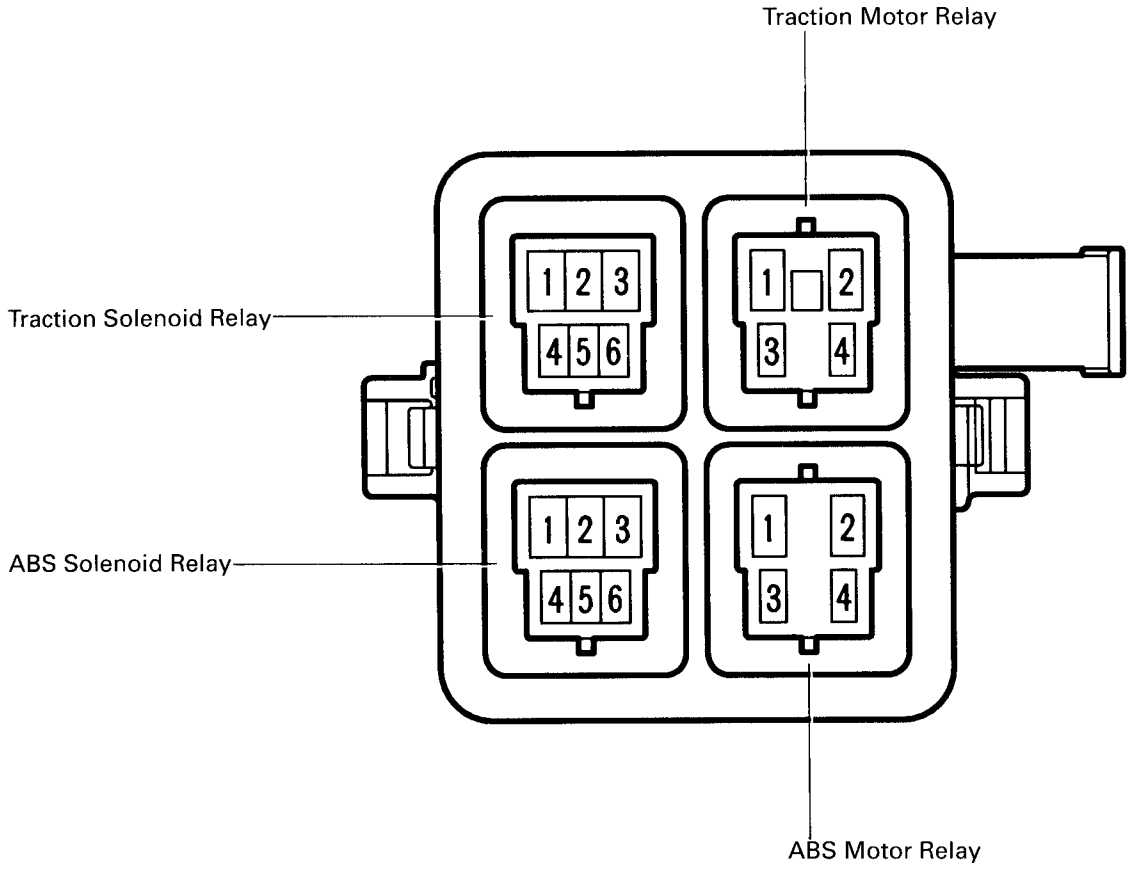

Position of Parts in Engine Compartment

[2JZ–GTE]

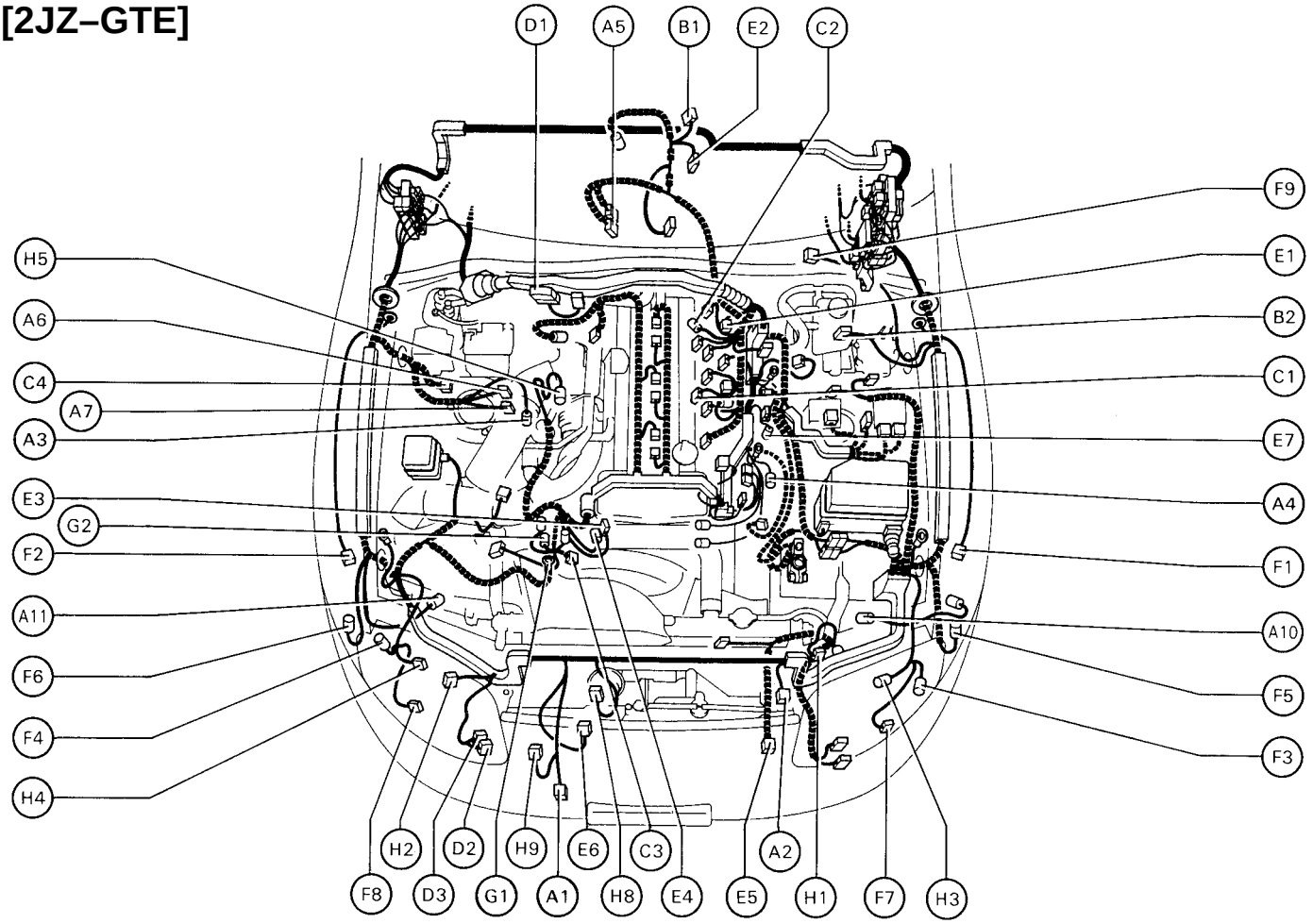

A 1 A/C Ambient Temp. Sensor
A 2 A/C Condenser Fan Motor
A 3 A/C Triple Pressure SW (A/C Dual and Single Pressure SW)
A 4 A/C Magnetic Clutch and Lock Sensor
A 5 A/T Fluid Temp. Sensor
A 6 ABS Actuator
A 7 ABS Actuator
A 10 ABS Speed Sensor Front LH
A 11 ABS Speed Sensor Front RH

B 1 Back–Up Light SW (for M/T)
B 2 Brake Fluid Level Warning SW

C 1 Camshaft Position Sensor No. 1
C 2 Camshaft Position Sensor No. 2
C 3 Crankshaft Position Sensor
C 4 Cruise Control Actuator

D 1 Data Link Connector 1 (Check Connector)
D 2 Daytime Running Light Relay No. 3
D 3 Daytime Running Light Relay No. 3

E 1 EGR Gas Temp. Sensor
E 2 Electronically Controlled Transmission Solenoid
E 3 Engine Coolant Temp. Sensor (EFI Water Temp. Sensor)
E 4 Engine Coolant Temp. Sender (Water Temp. Sender)
E 5 Engine Coolant Temp. SW (Water Temp. SW)
E 6 Engine Hood Courtesy SW
E 7 Engine Oil Level Sensor

F 1 Front Airbag Sensor LH
F 2 Front Airbag Sensor RH
F 3 Front Fog Light and Parking Light LH
F 4 Front Fog Light and Parking Light RH
F 5 Front Side Marker Light LH
F 6 Front Side Marker Light RH
F 7 Front Turn Signal Light LH
F 8 Front Turn Signal Light RH
F 9 Front Wiper Motor

G 1 Generator (Alternator)
G 2 Generator (Alternator)

H 1 Headlight Hi LH
H 2 Headlight Hi RH
H 3 Headlight Lo LH
H 4 Headlight Lo RH
H 5 Heated Oxygen Sensor (Main)
H 8 Horn LH
H 9 Horn RH

Position of Parts in Engine Compartment

[2JZ–GTE]

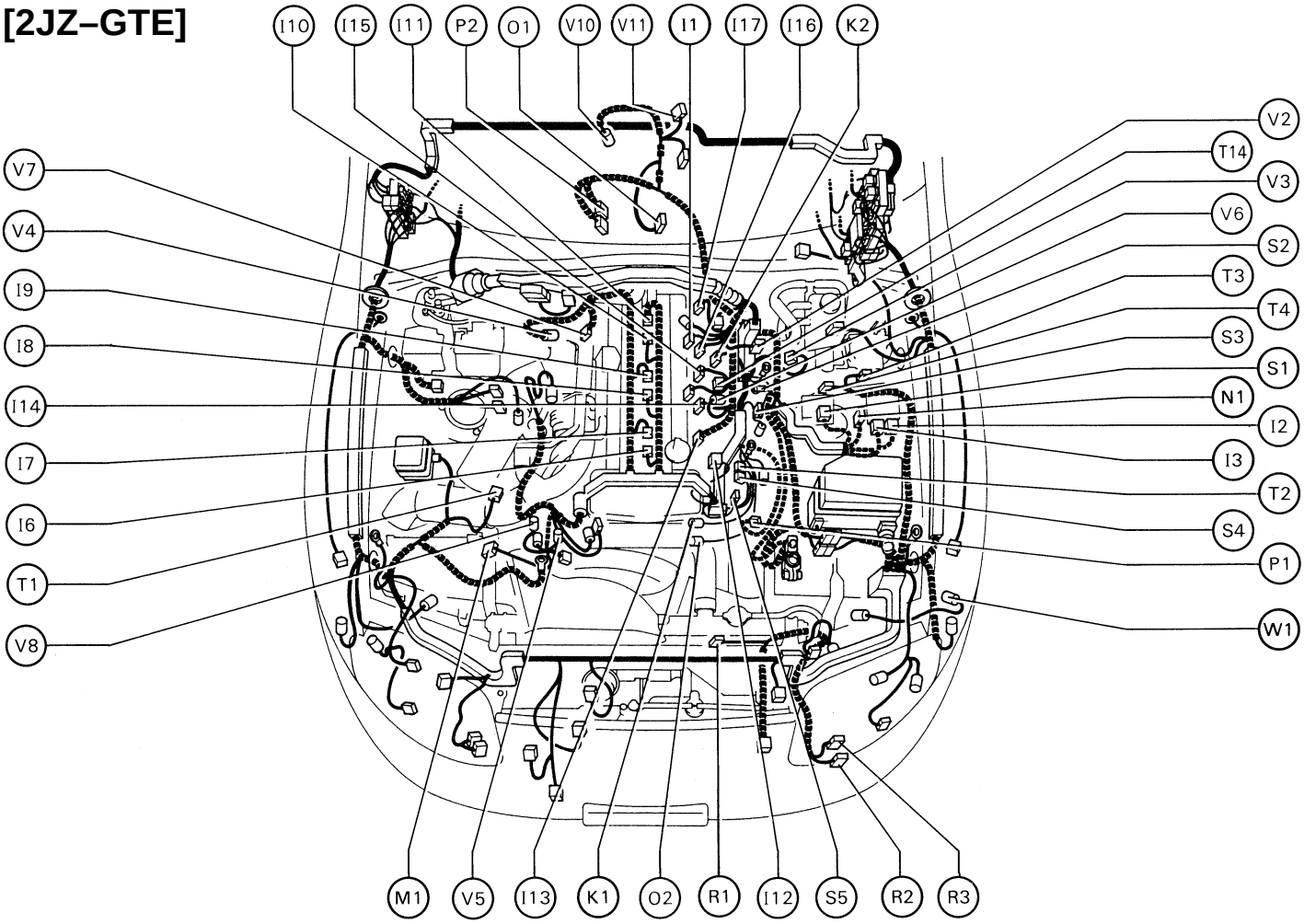

I 1 Idle Air Control Valve (ISC Valve)
I 2 Igniter
I 3 Igniter
I 6 Ignition Coil No. 1
I 7 Ignition Coil No. 2
I 8 Ignition Coil No. 3
I 9 Ignition Coil No. 4
I 10 Ignition Coil No. 5
I 11 Ignition Coil No. 6
I 12 Injector No. 1
I 13 Injector No. 2
I 14 Injector No. 3
I 15 Injector No. 4
I 16 Injector No. 5
I 17 Injector No. 6

K 1 Knock Sensor (on Front Side)
K 2 Knock Sensor (on Rear Side)

M 1 Mass Air Flow (Air Flow Meter)

N 1 Noise Filter

O 1 O/D Direct Clutch Speed Sensor
O 2 Oil Pressure SW

P 1 PPS Solenoid
P 2 Park/Neutral Position SW (Neutral Start SW), Back–Up Light SW and A/T Indicator Light SW (for A/T)

R 1 Radiator Fan Motor
R 2 Radiator Fan Relay No. 1
R 3 Radiator Fan Relay No. 2

S 1 SFI Resistor (EFI Resistor)
S 2 Starter
S 3 Starter
S 4 Sub Throttle Actuator
S 5 Sub Throttle Position Sensor

T 1 Theft Deterrent Horn
T 2 Throttle Position Sensor
T 3 Traction Brake Actuator
T 4 Traction Pump and Motor
T 14 Turbo Pressure Sensor

V 2 VSV (for EGR)
V 3 VSV (for EVAP)
V 4 VSV (for Exhaust Bypass Valve)
V 5 VSV (for Exhaust Gas Control Valve)
V 6 VSV (for Fuel Pressure Up)
V 7 VSV (for Intake Air Control Valve)
V 8 VSV (for Waste Gate Valve)
V 10 Vehicle Speed Sensor (Speed Sensor) No. 1 (for Combination Meter)
V 11 Vehicle Speed Sensor (Speed Sensor) No. 2 (for Electronically Controlled Transmission)

W 1 Washer Motor

Position of Parts in Engine Compartment

[2JZ–GE]

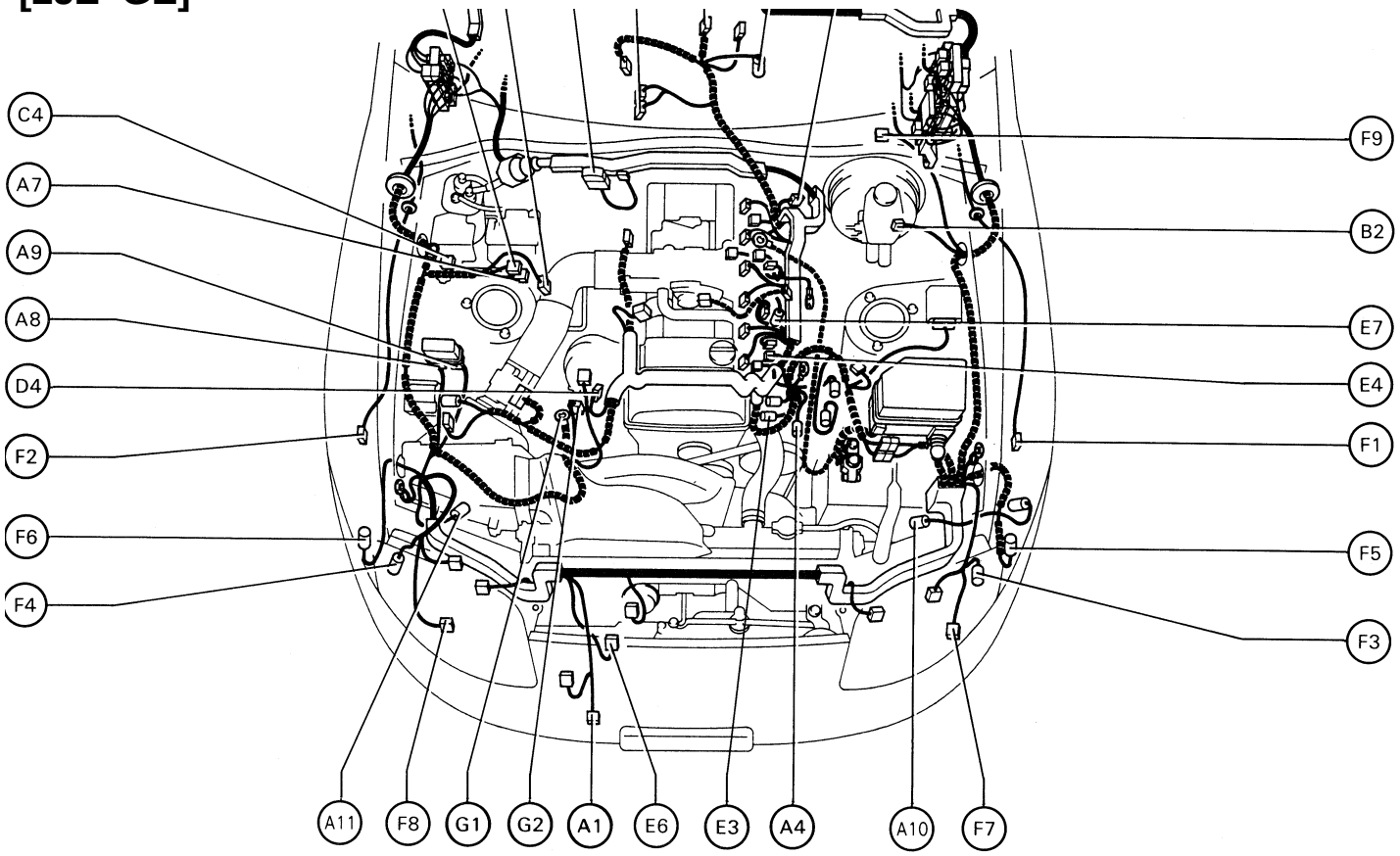

A 1 A/C Ambient Temp. Sensor
A 3 A/C Dual Pressure SW
A 4 A/C Magnetic Clutch and Lock Sensor
A 5 A/T Fluid Temp. Sensor
A 6 ABS Actuator
A 7 ABS Actuator
A 8 ABS Relay
A 9 ABS Relay
A 10 ABS Speed Sensor Front LH
A 11 ABS Speed Sensor Front RH

B 1 Back-Up Light SW (for M/T)
B 2 Brake Fluid Level Warning SW

C 4 Cruise Control Actuator

D 1 Data Link Connector 1 (Check Connector)
D 4 Distributor

E 1 EGR Gas Temp. Sensor
E 2 Electronically Controlled Transmission Solenoid
E 3 Engine Coolant Temp. Sensor (EFI Water Temp. Sensor)
E 4 Engine Coolant Temp. Sender (Water Temp. Sender)
E 6 Engine Hood Courtesy SW
E 7 Engine Oil Level Sensor

F 1 Front Airbag Sensor LH
F 2 Front Airbag Sensor RH
F 3 Front Fog Light and Parking Light LH
F 4 Front Fog Light and Parking Light RH
F 5 Front Side Marker Light LH
F 6 Front Side Marker Light RH
F 7 Front Turn Signal Light LH
F 8 Front Turn Signal Light RH
F 9 Front Wiper Motor

G 1 Generator (Alternator)
G 2 Generator (Alternator)

Position of Parts in Engine Compartment

[2JZ–GE]

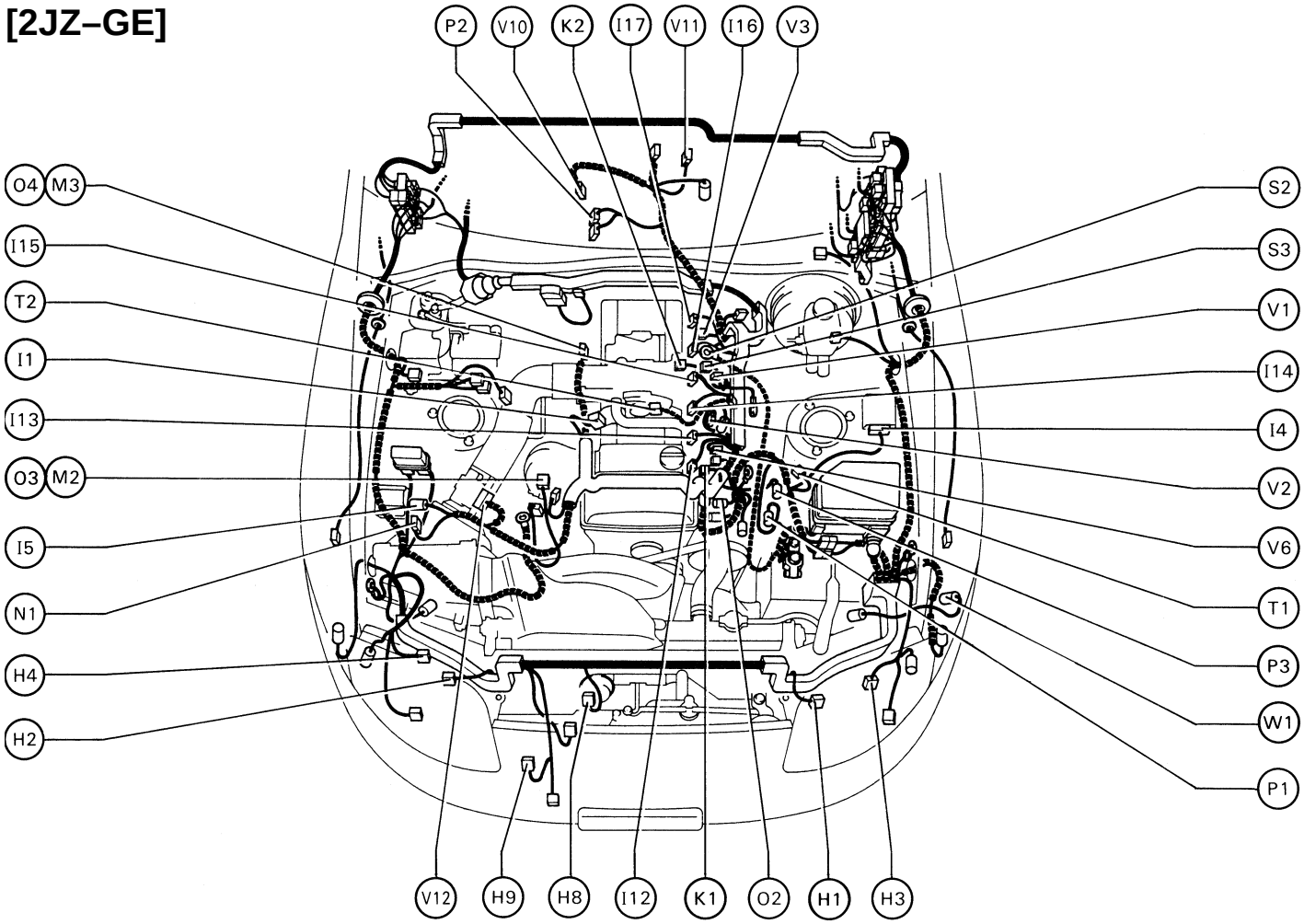

H 1 Headlight Hi LH
H 2 Headlight Hi RH
H 3 Headlight Lo LH
H 4 Headlight Lo RH
H 8 Horn LH
H 9 Horn RH

I 1 Idle Air Control Valve (ISC Valve)
I 4 Igniter
I 5 Ignition Coil
I 12 Injector No. 1
I 13 Injector No. 2
I 14 Injector No. 3
I 15 Injector No. 4
I 16 Injector No. 5
I 17 Injector No. 6

K 1 Knock Sensor (on Front Side)
K 2 Knock Sensor (on Rear Side)

M 2 Main Heated Oxygen Sensor (for California on Front Side)
M 3 Main Heated Oxygen Sensor (for California on Rear Side)

N 1 Noise Filter

O 2 Oil Pressure SW
O 3 Oxygen Sensor (Except California on Front Side)
O 4 Oxygen Sensor (Except California on Rear Side)

P 1 PPS Solenoid
P 2 Park/Neutral Position SW (Neutral Start SW), Back–Up Light SW and A/T Indicator Light SW (for A/T)
P 3 Power Steering Pressure SW

S 2 Starter
S 3 Starter

T 1 Theft Deterrent Horn
T 2 Throttle Position Sensor

V 1 VSV (for ACIS)
V 2 VSV (for EGR)
V 3 VSV (for EVAP)
V 6 VSV (for Fuel Pressure Up)
V 10 Vehicle Speed Sensor (Speed Sensor) No. 1 (for Combination Meter)
V 11 Vehicle Speed Sensor (Speed Sensor) No. 2 (for Electronically Controlled Transmission)
V 12 Volume Air Flow (Air Flow Meter)

W 1 Washer Motor

Position of Parts in Instrument Panel

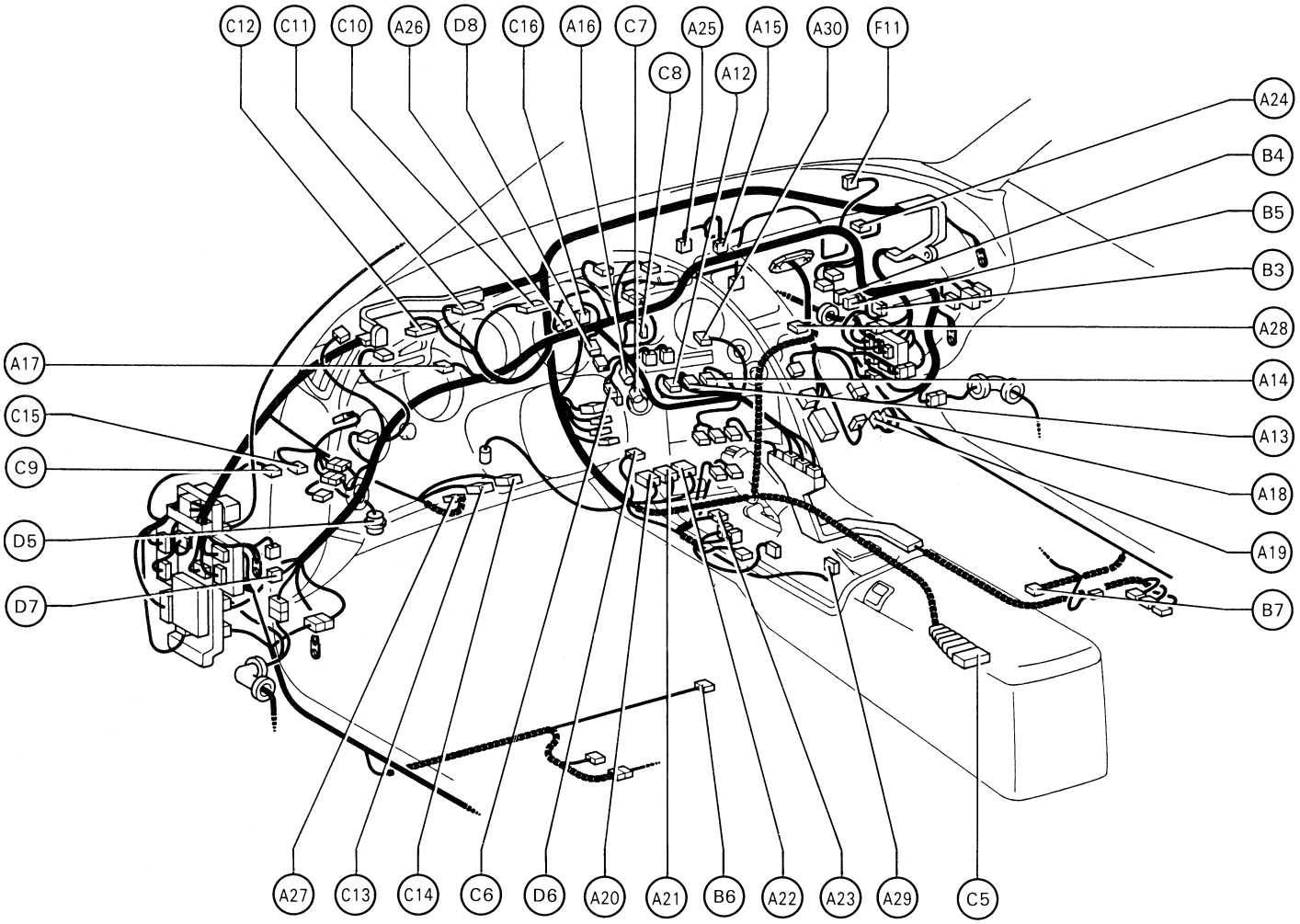

A 12 A/C Amplifier
A 13 A/C Amplifier
A 14 A/C Amplifier
A 15 A/C Evaporator Temp. Sensor
A 16 A/C Room Temp. Sensor
A 17 A/C Solar Sensor
A 18 ABS ECU
A 19 ABS ECU
A 20 ABS and Traction ECU
A 21 ABS and Traction ECU
A 22 ABS and Traction ECU
A 23 ABS Lateral Acceleration Sensor
A 24 Air Inlet Control Servo Motor
A 25 Air Mix Control Servo Motor
A 26 Air Vent Mode Control Servo Motor
A 27 Airbag Squib (Steering Wheel Pad)
A 28 Airbag Squib (Front Passenger Airbag Assembly)
A 29 Ashtray Illumination
A 30 Auto Antenna Control Relay

B 3 Blower Motor
B 4 Blower Motor Control Relay
B 5 Blower Motor Control Relay
B 6 Buckle SW LH
B 7 Buckle SW RH

C 5 Center Airbag Sensor Assembly
C 6 Cigarette Lighter
C 7 Cigarette Lighter Illumination
C 8 Clock
C 9 Clutch Start SW
C 10 Combination Meter
C 11 Combination Meter
C 12 Combination Meter
C 13 Combination SW
C 14 Combination SW
C 15 Cruise Control Clutch SW
C 16 Cruise Control ECU

D 5 Data Link Connector 2 (TDCL)
D 6 Daytime Running Light Relay (Main)
D 7 Diode (for Interior Light)
D 8 Diode (for Idle-Up)

Position of Parts in Instrument Panel

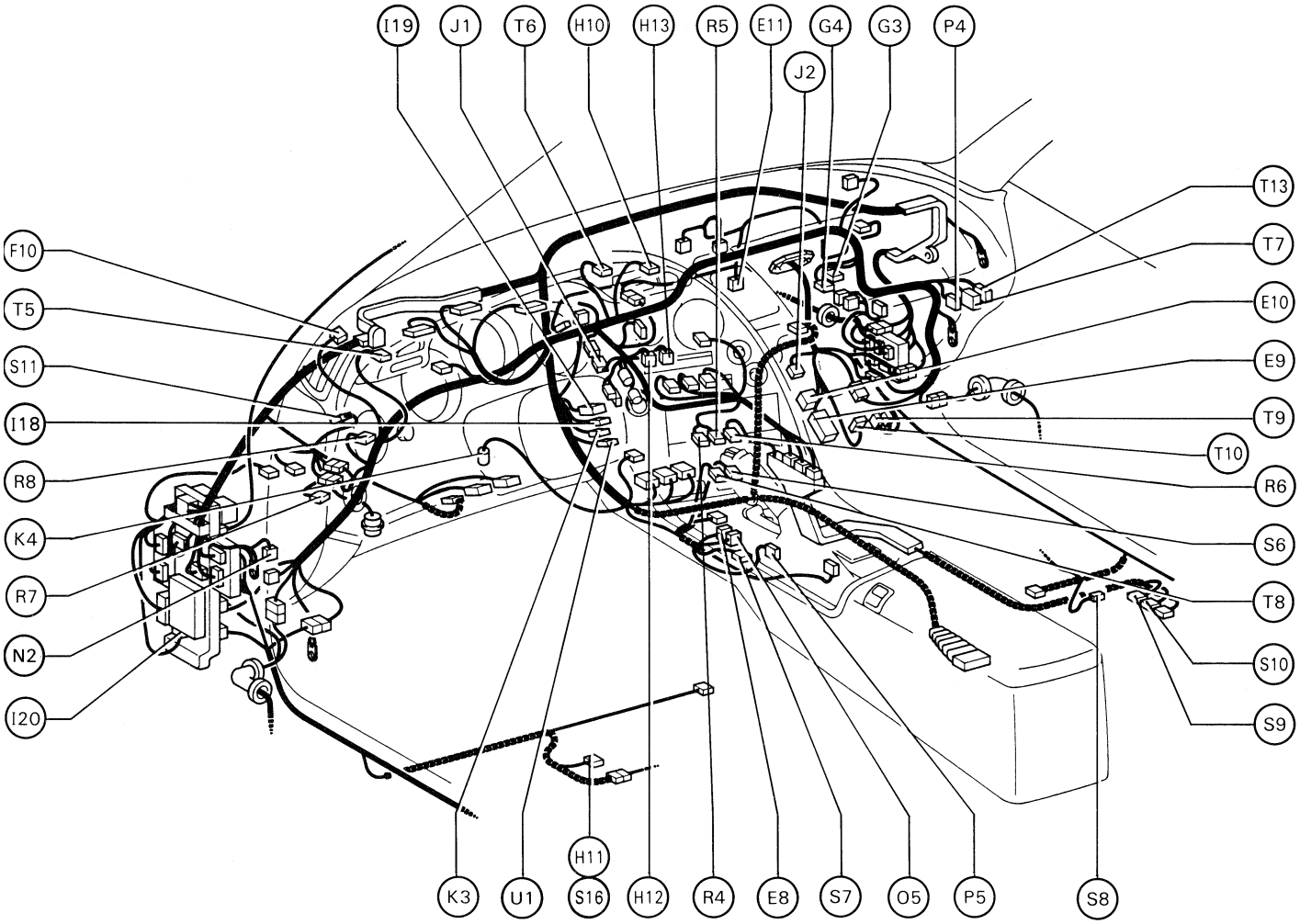

E 8 Electronically Controlled Transmission Pattern Select SW
E 9 Engine Control Module (Engine and Electronically Controlled Transmission ECU)
E 10 Engine Control Module (Engine and Electronically Controlled Transmission ECU)
E 11 Engine Coolant Temp. Sensor (Water Temp. Sensor) (for A/C System)

F 10 Front Tweeter (Speaker) LH
F 11 Front Tweeter (Speaker) RH

G 3 Glove Box Light
G 4 Glove Box Light SW

H 10 Hazard SW
H 11 Heated Oxygen Sensor (Sub)
H 12 Heater Control SW
H 13 Heater Control SW

I 18 Ignition Key Cylinder Light
I 19 Ignition SW
I 20 Integration Relay

J 1 Junction Connector
J 2 Junction Connector

K 3 Key Interlock Solenoid
K 4 Kick Down SW

N 2 Noise Filter

O 5 O/D Main SW and A/T Indicator Light (for Shift Lever)

P 4 PPS ECU
P 5 Parking Brake SW

R 4 Radio and Player (w/o Stereo Power Amplifier)
R 5 Radio and Player (w/o Stereo Power Amplifier)
R 6 Radio and Player (w/ Stereo Power Amplifier)
R 7 Remote Control Mirror SW
R 8 Rheostat

S 6 Seat Heater SW
S 7 Shift Lock ECU
S 8 Stereo Power Amplifier
S 9 Stereo Power Amplifier
S 10 Stereo Power Amplifier
S 11 Stop Light SW
S 16 Sub Heated Oxygen Sensor (for California)

T 5 Telltale Light LH
T 6 Telltale Light RH
T 7 Theft Deterrent ECU
T 8 TRAC Off SW
T 9 Traction ECU
T 10 Traction ECU
T 13 Theft Deterrent ECU

U 1 Unlock Warning SW

Position of Parts in Body

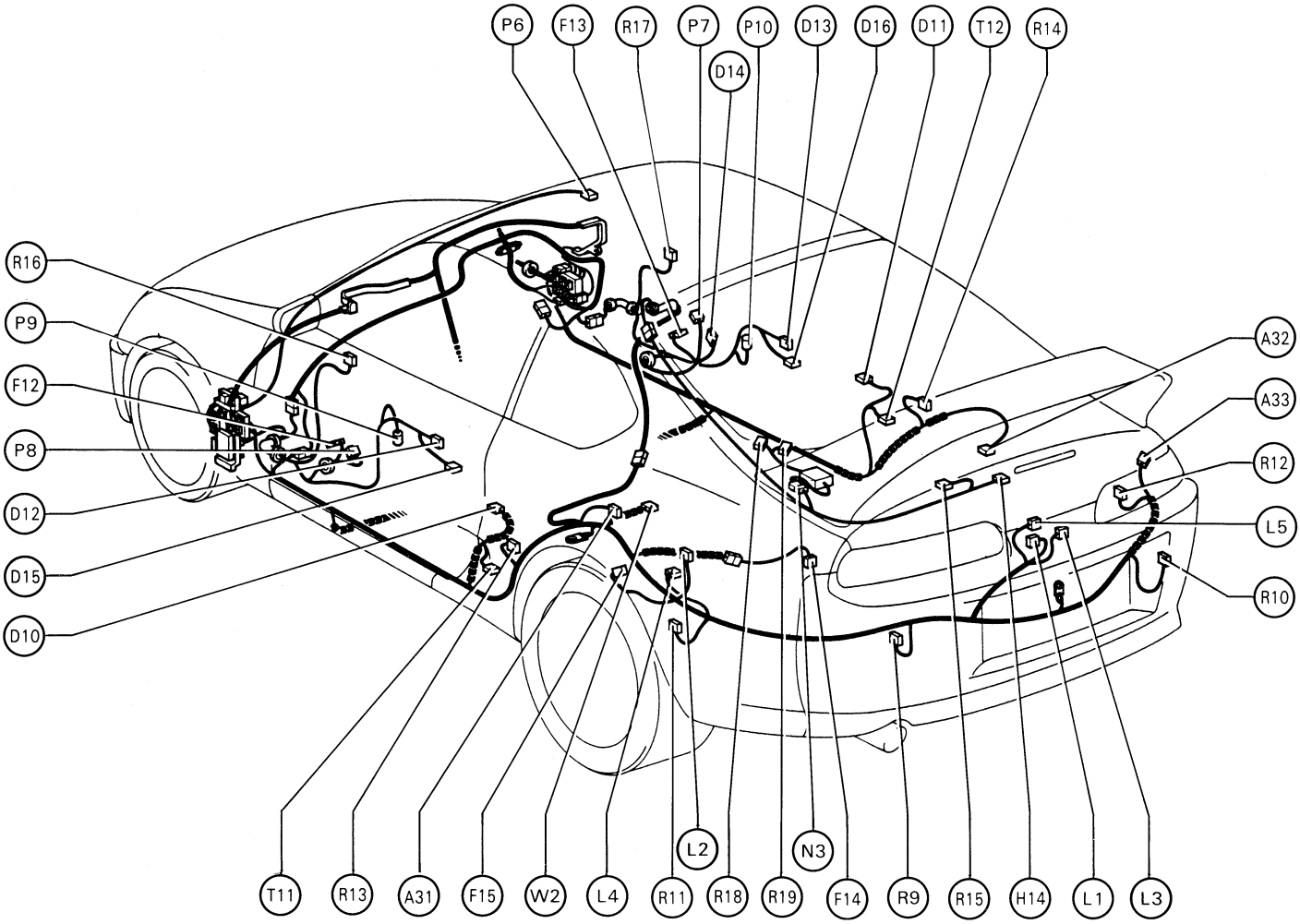

A 31 ABS Speed Sensor Rear LH
A 32 ABS Speed Sensor Rear RH
A 33 Auto Antenna Motor

D 10 Door Courtesy SW LH
D 11 Door Courtesy SW RH
D 12 Door Key Lock and Unlock SW LH
D 13 Door Key Lock and Unlock SW RH
D 14 Door Lock Control SW RH
D 15 Door Lock Motor and Door Unlock Detection SW LH
D 16 Door Lock Motor and Door Unlock Detection SW RH

F 12 Front Door Speaker LH
F 13 Front Door Speaker RH
F 14 Fuel Pump and Sender
F 15 Fuel Pump ECU

H 14 High Mounted Stop Light

L 1 License Plate Light
L 2 Light Failure Sensor
L 3 Luggage Compartment Key Unlock SW
L 4 Luggage Compartment Light
L 5 Luggage Compartment Light SW

N 3 Noise Filter

P 6 Personal Light
P 7 Power Window Control SW RH
P 8 Power Window Master SW and Door Lock Control SW LH
P 9 Power Window Motor LH
P 10 Power Window Motor RH

R 9 Rear Combination Light LH
R 10 Rear Combination Light RH
R 11 Rear Side Marker Light LH
R 12 Rear Side Marker Light RH
R 13 Rear Speaker LH
R 14 Rear Speaker RH
R 15 Rear Wiper Motor and Relay
R 16 Remote Control Mirror and Mirror Heater LH
R 17 Remote Control Mirror and Mirror Heater RH
R 18 Rear Window Defogger (+)
R 19 Rear Window Defogger (–)

T 11 Tension Reducer Solenoid LH
T 12 Tension Reducer Solenoid RH

W 2 Woofer (Speaker)

Position of Parts in Seat

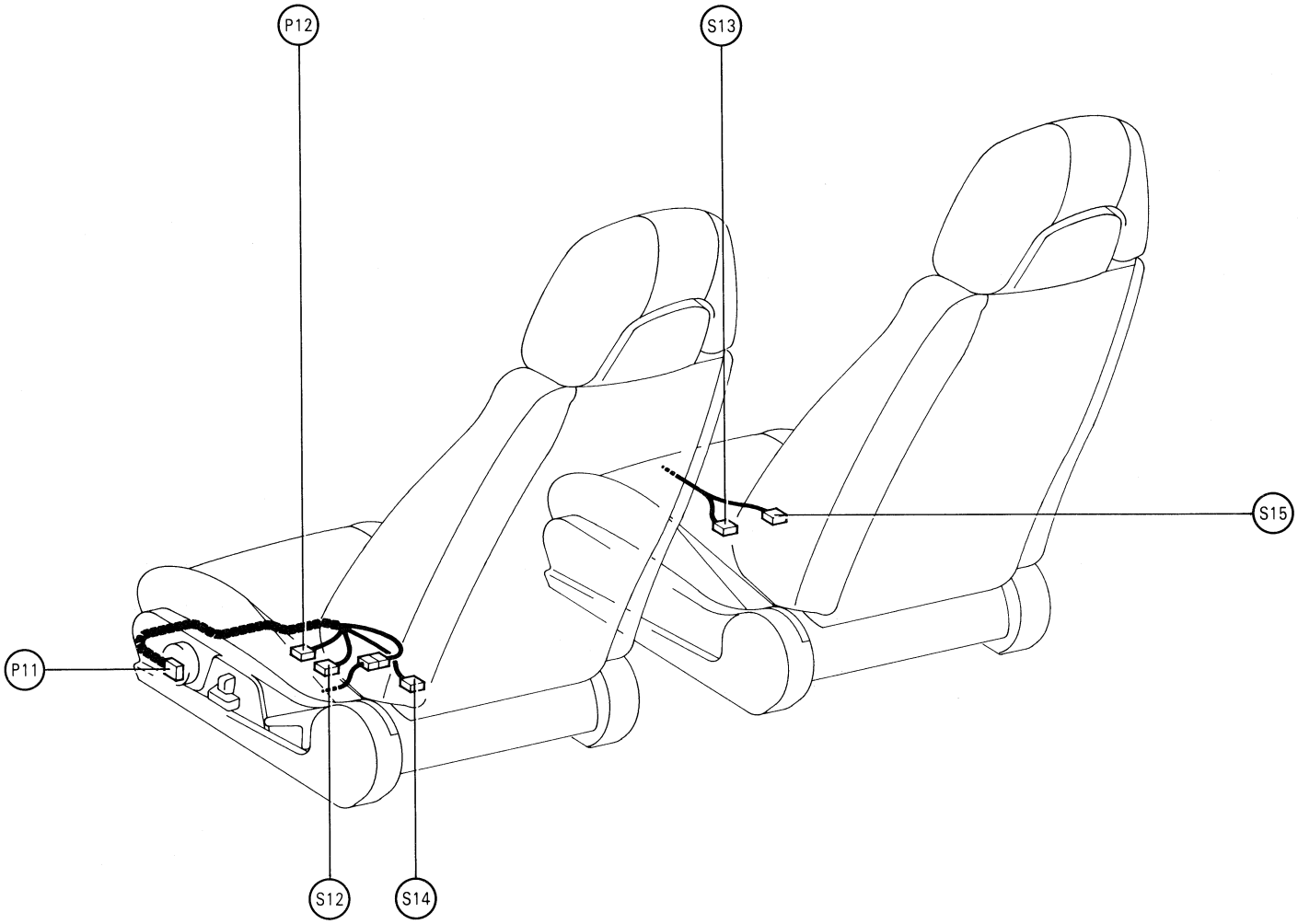

P 11 Power Seat Control SW (for Driver's Seat)
P 12 Power Seat Motor (for Driver's Seat Slide Control)

S 12 Seat Heater (for Driver's Seat)
S 13 Seat Heater (for Passenger's Seat)
S 14 Seat Heater Relay (for Driver's Seat)
S 15 Seat Heater Relay (for Passenger's Seat)

▭ : Location of Connector Joining Wire Harness and Wire Harness

▽ : Location of Ground Points

[2JZ–GTE]

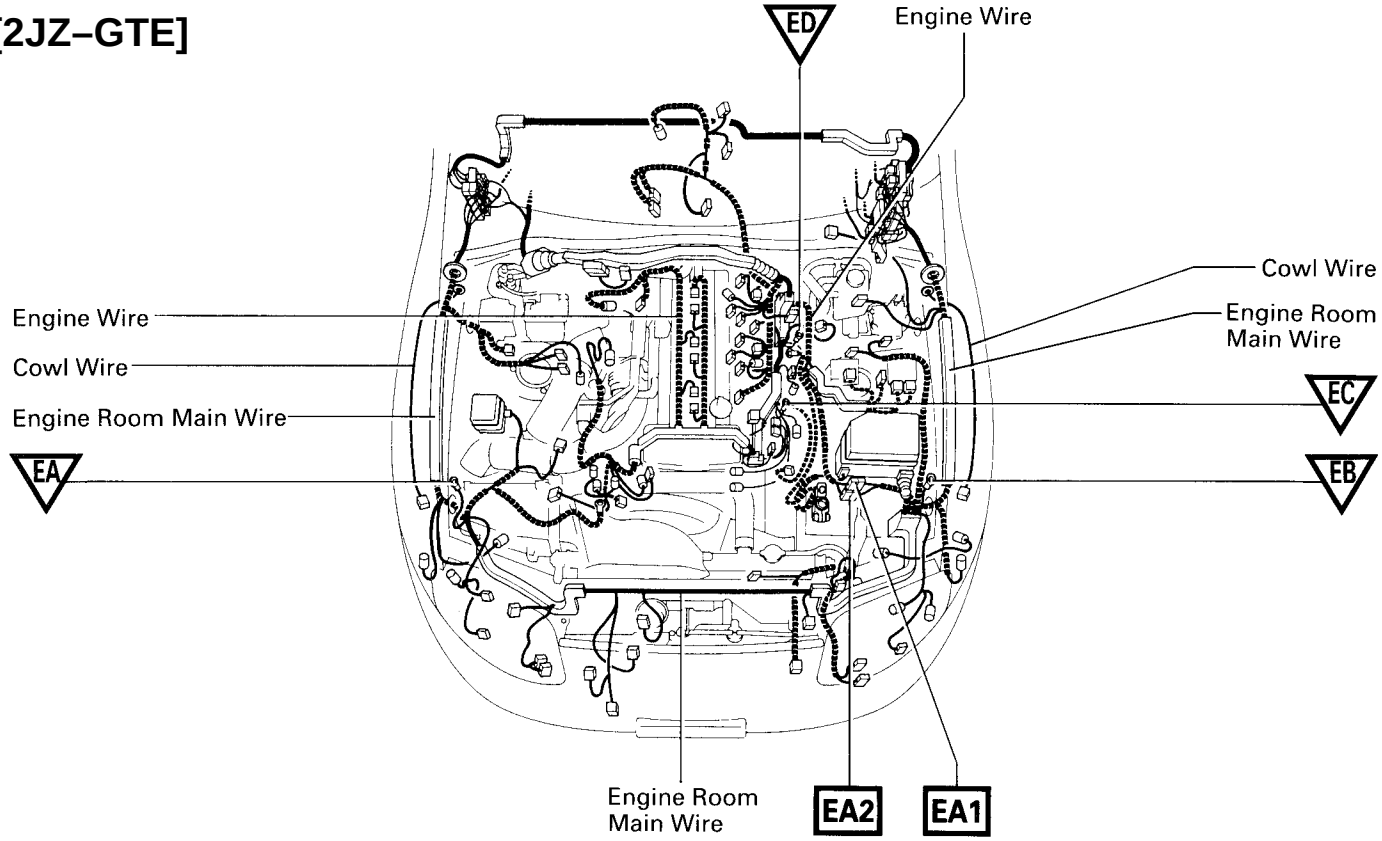

○ : Location of Splice Points

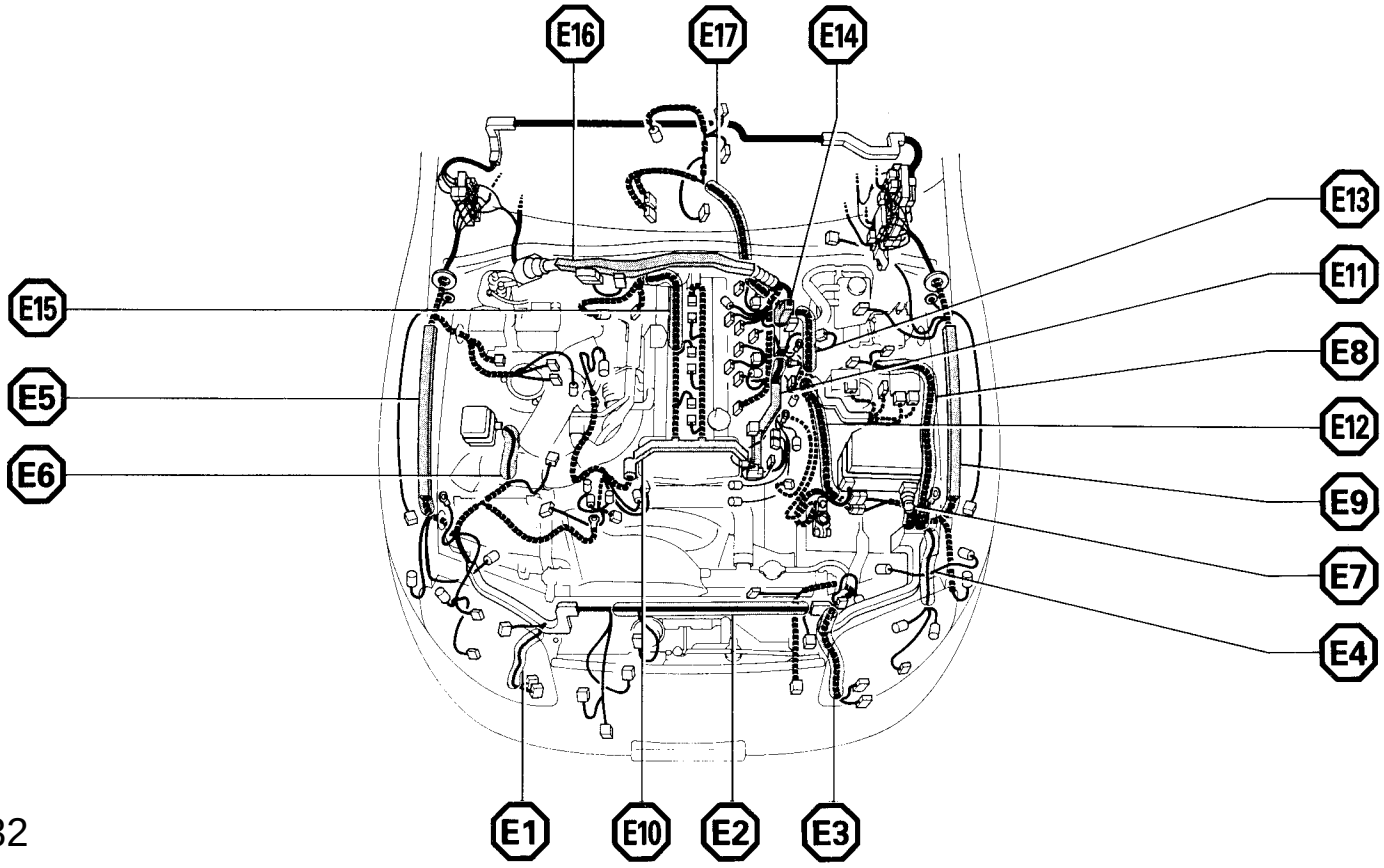

Connector Joining Wire Harness and Wire Harness

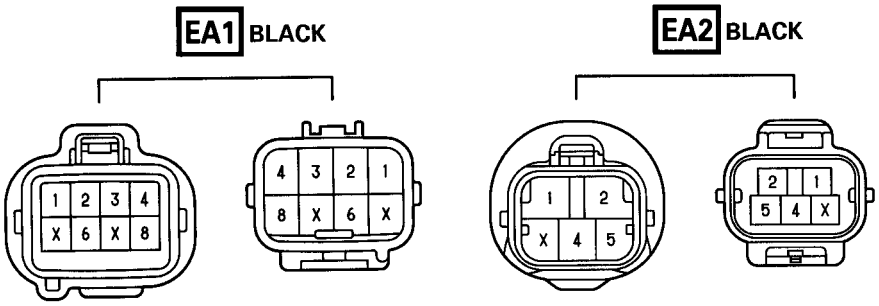

CODE	JOINING WIRE HARNESS AND WIRE HARNESS (CONNECTOR LOCATION)
EA1	ENGINE WIRE AND ENGINE ROOM MAIN WIRE (NEAR THE R/B NO. 2)
EA2	

▭ : Location of Connector Joining Wire Harness and Wire Harness

▽ : Location of Ground Points

[2JZ–GE]

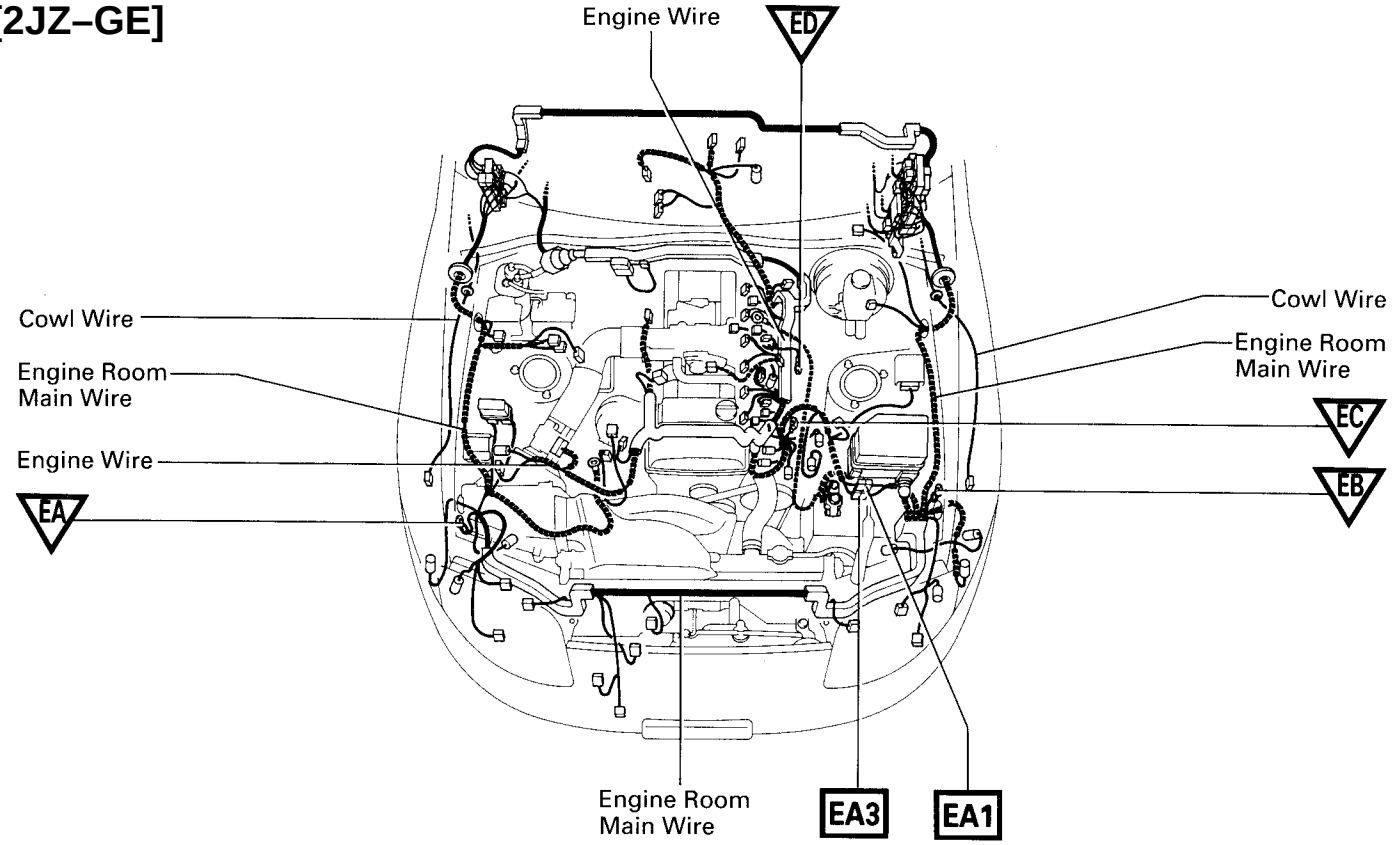

○ : Location of Splice Points

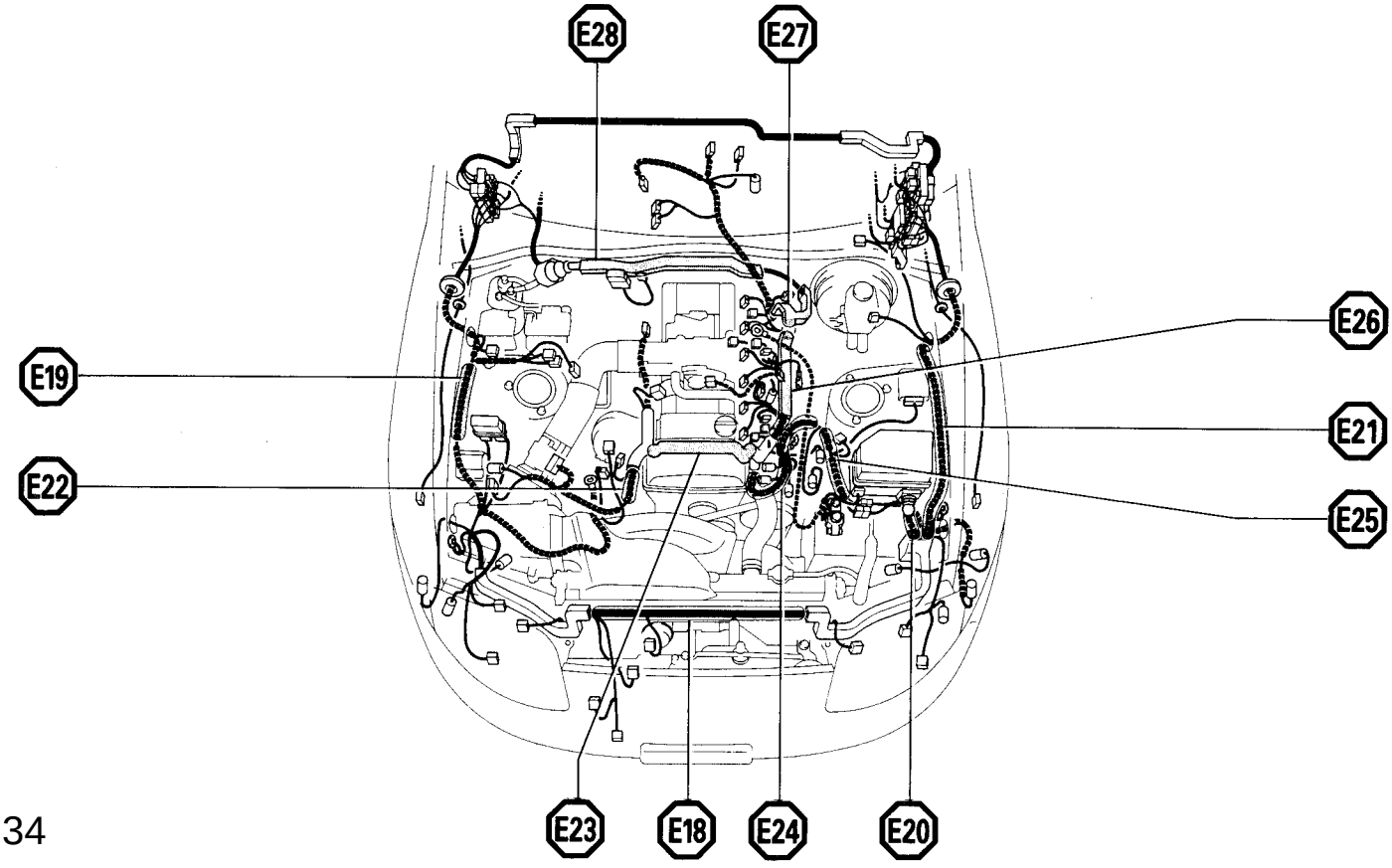

Connector Joining Wire Harness and Wire Harness

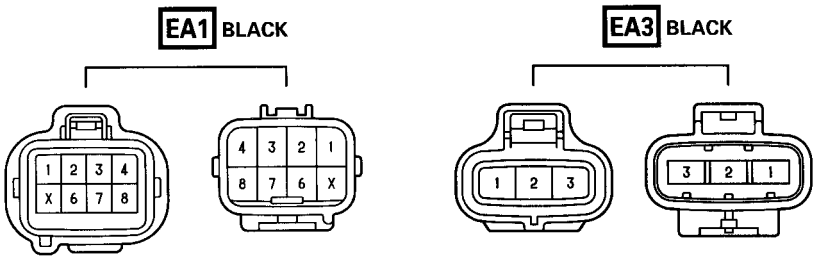

CODE	JOINING WIRE HARNESS AND WIRE HARNESS (CONNECTOR LOCATION)
EA1	ENGINE WIRE AND ENGINE ROOM MAIN WIRE (NEAR THE R/B NO. 2)
EA3	

▭ : Location of Connector Joining Wire Harness and Wire Harness

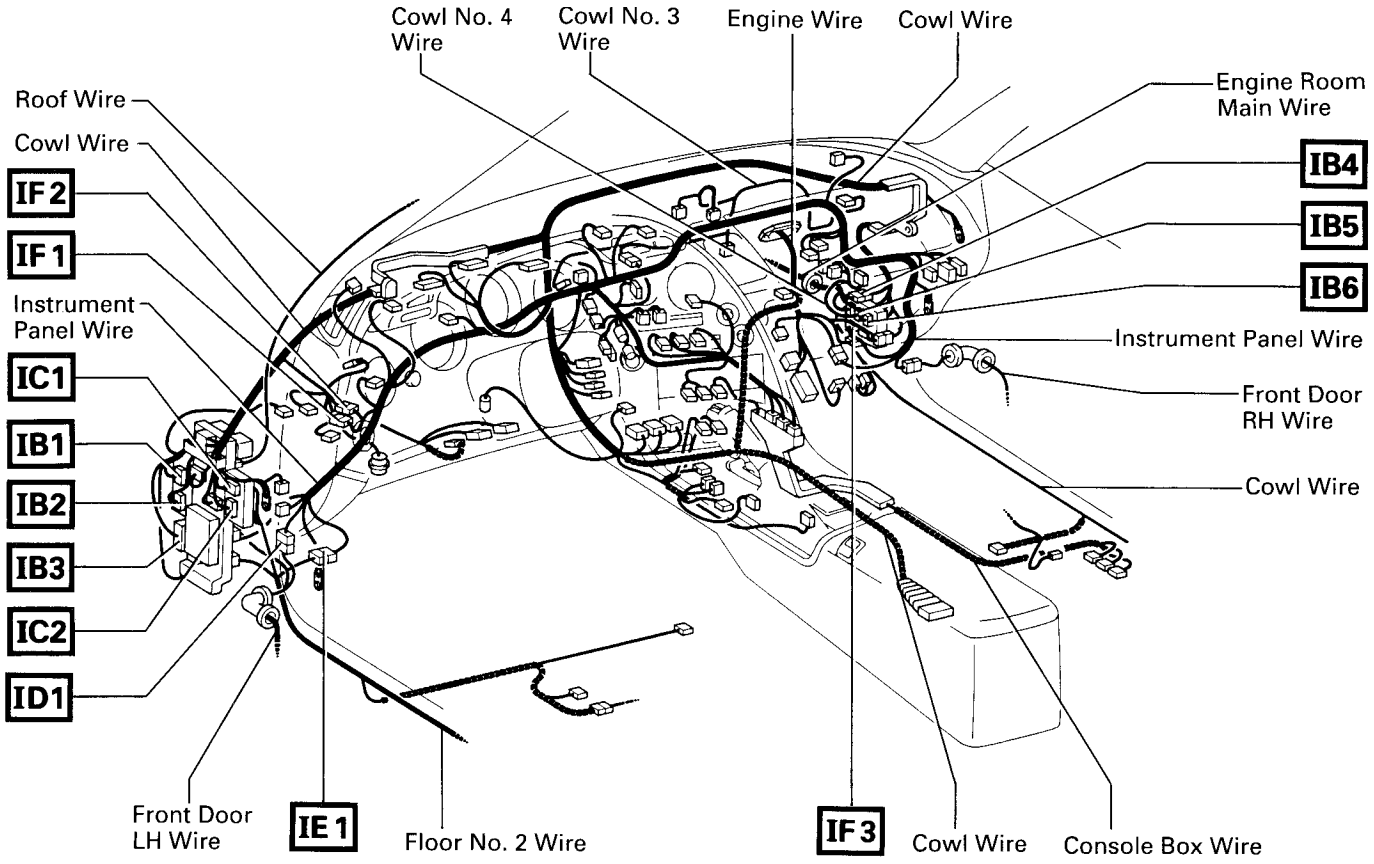

▽ : Location of Ground Points

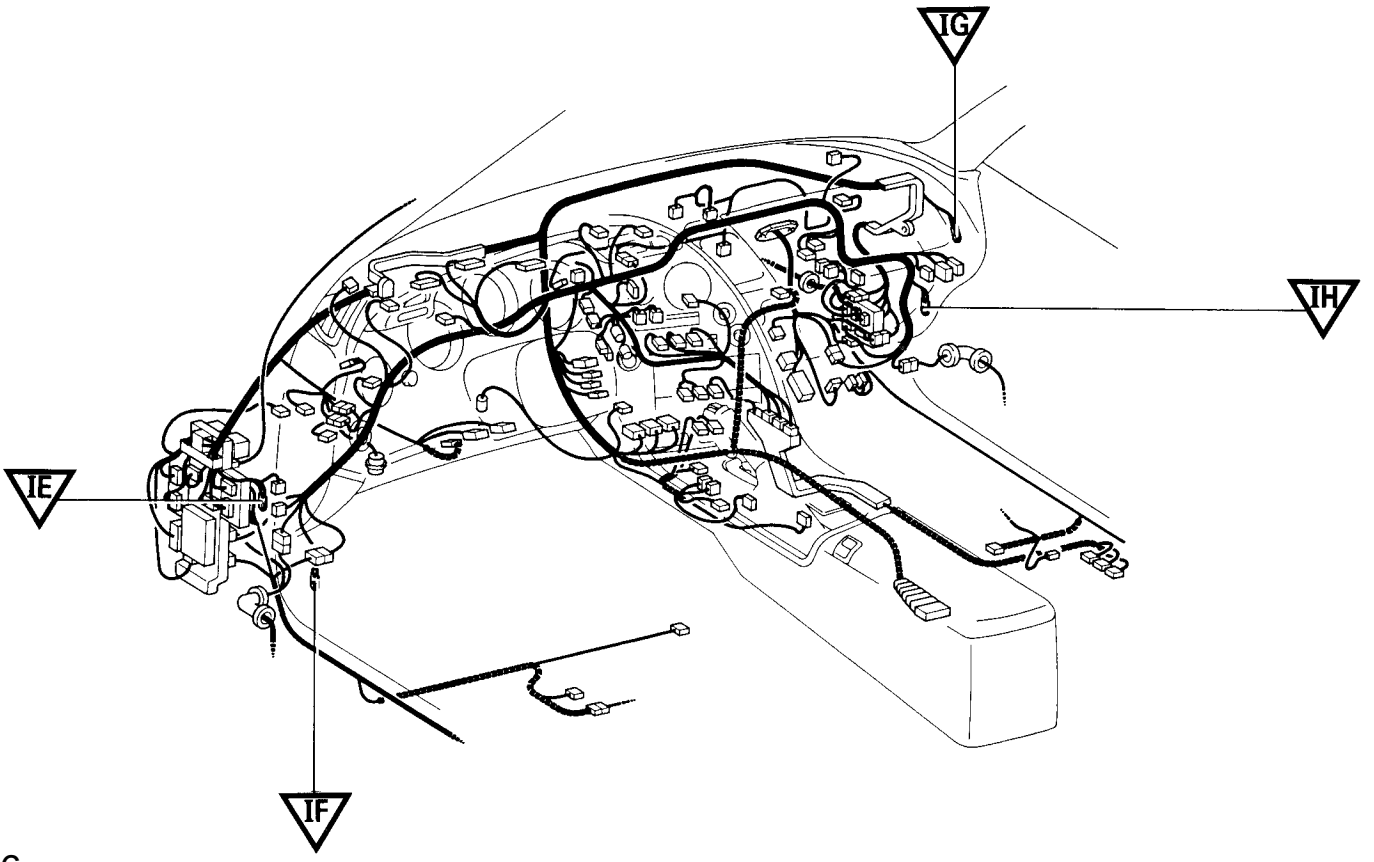

Connector Joining Wire Harness and Wire Harness

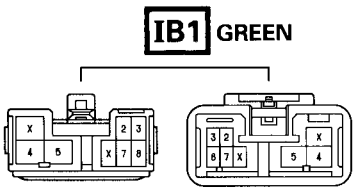

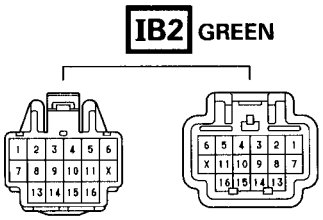

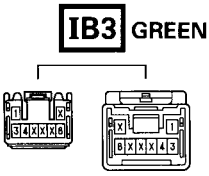

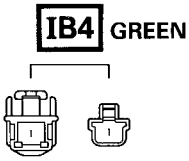

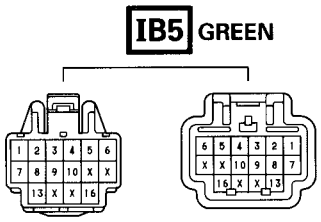

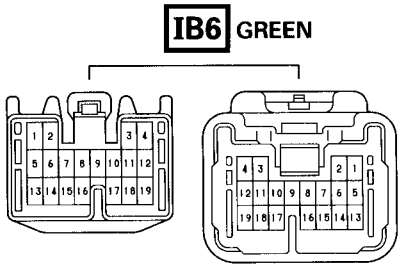

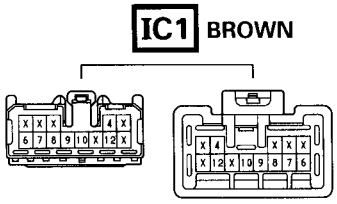

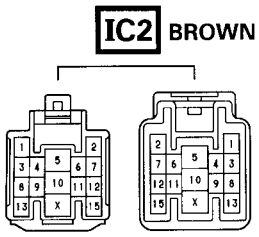

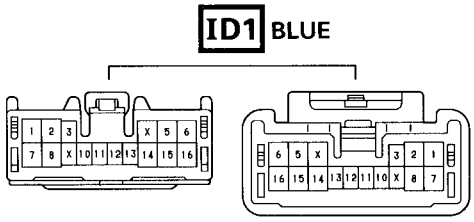

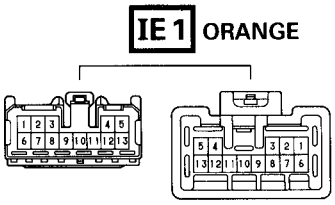

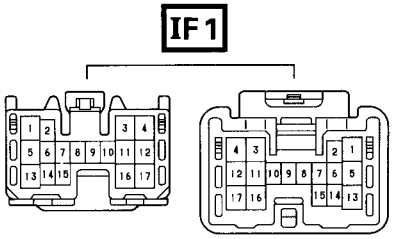

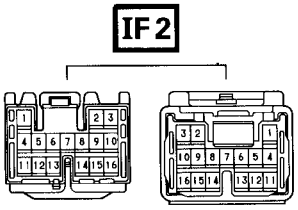

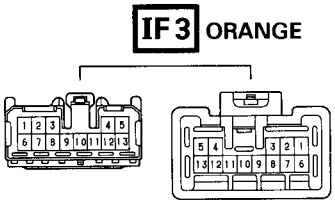

CODE	JOINING WIRE HARNESS AND WIRE HARNESS (CONNECTOR LOCATION)
IB1	ENGINE ROOM MAIN WIRE AND COWL WIRE (LEFT KICK PANEL)
IB2	
IB3	
IB4	ENGINE ROOM MAIN WIRE AND COWL WIRE (RIGHT KICK PANEL)
IB5	
IB6	
IC1	FLOOR NO. 2 WIRE AND COWL WIRE (LEFT KICK PANEL)
IC2	
ID1	FRONT DOOR LH WIRE AND INSTRUMENT PANEL WIRE (LEFT KICK PANEL)
IE1	INSTRUMENT PANEL WIRE AND FLOOR NO. 2 WIRE (LEFT KICK PANEL)
IF1	INSTRUMENT PANEL WIRE AND COWL WIRE (INSTRUMENT PANEL REINFORCEMENT LH)
IF2	
IF3	INSTRUMENT PANEL WIRE AND COWL WIRE (RIGHT KICK PANEL)

▭ : Location of Connector Joining Wire Harness and Wire Harness

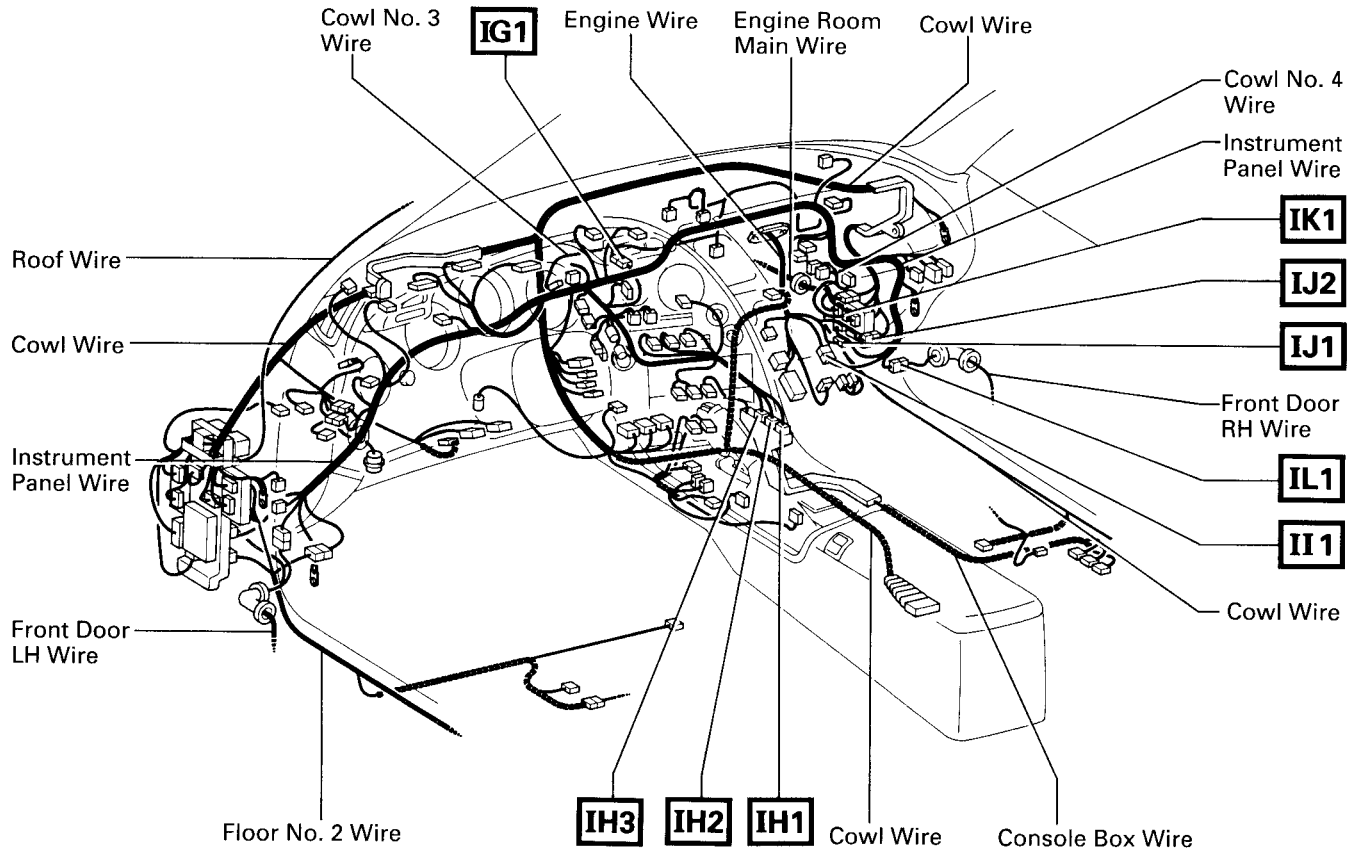

⬡ : Location of Splice Points

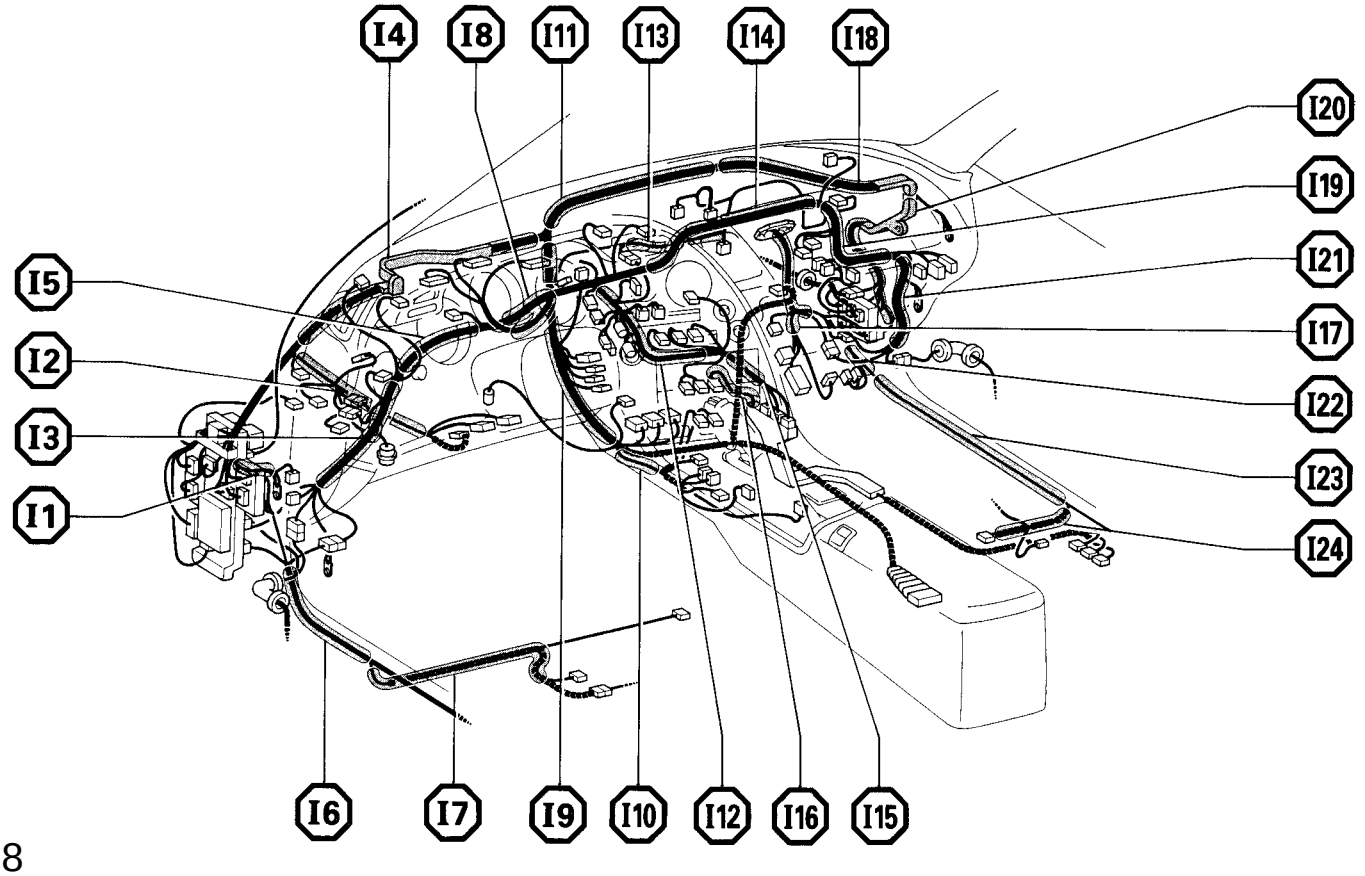

Connector Joining Wire Harness and Wire Harness

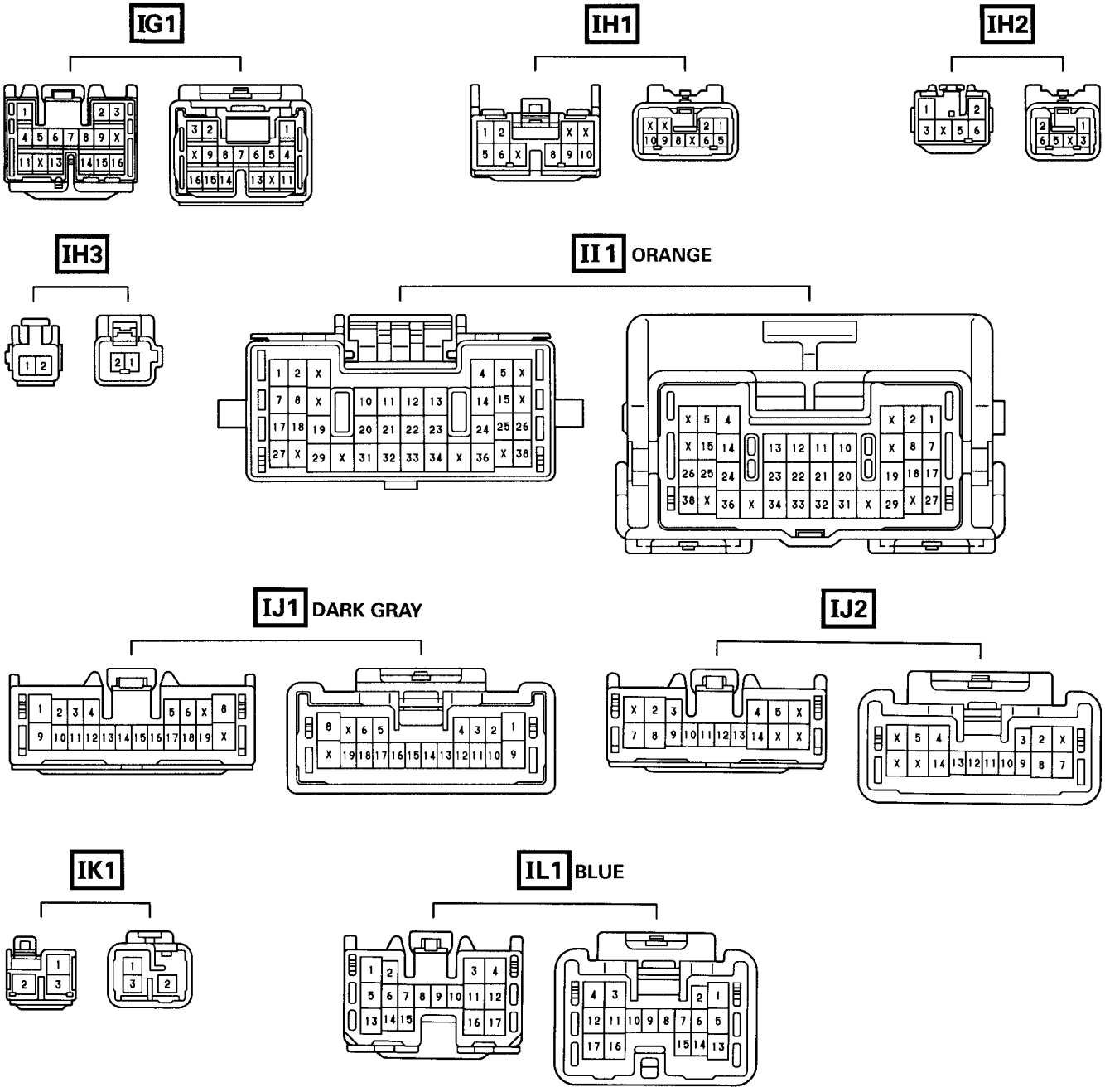

CODE	JOINING WIRE HARNESS AND WIRE HARNESS (CONNECTOR LOCATION)
IG1	INSTRUMENT PANEL WIRE AND COWL NO. 3 WIRE (BEHIND HEATER CONTROL SW)
IH1	INSTRUMENT PANEL WIRE AND CONSOLE BOX WIRE (UNDER THE INSTRUMENT PANEL BRACE RH)
IH2	
IH3	
II1	ENGINE WIRE AND INSTRUMENT PANEL WIRE (RIGHT KICK PANEL)
IJ1	ENGINE WIRE AND COWL WIRE (RIGHT KICK PANEL)
IJ2	
IK1	COWL NO. 4 WIRE AND COWL WIRE (RIGHT KICK PANEL)
IL1	FRONT DOOR RH WIRE AND INSTRUMENT PANEL WIRE (RIGHT KICK PANEL)

▭ : Location of Connector Joining Wire Harness and Wire Harness

▽ : Location of Ground Points

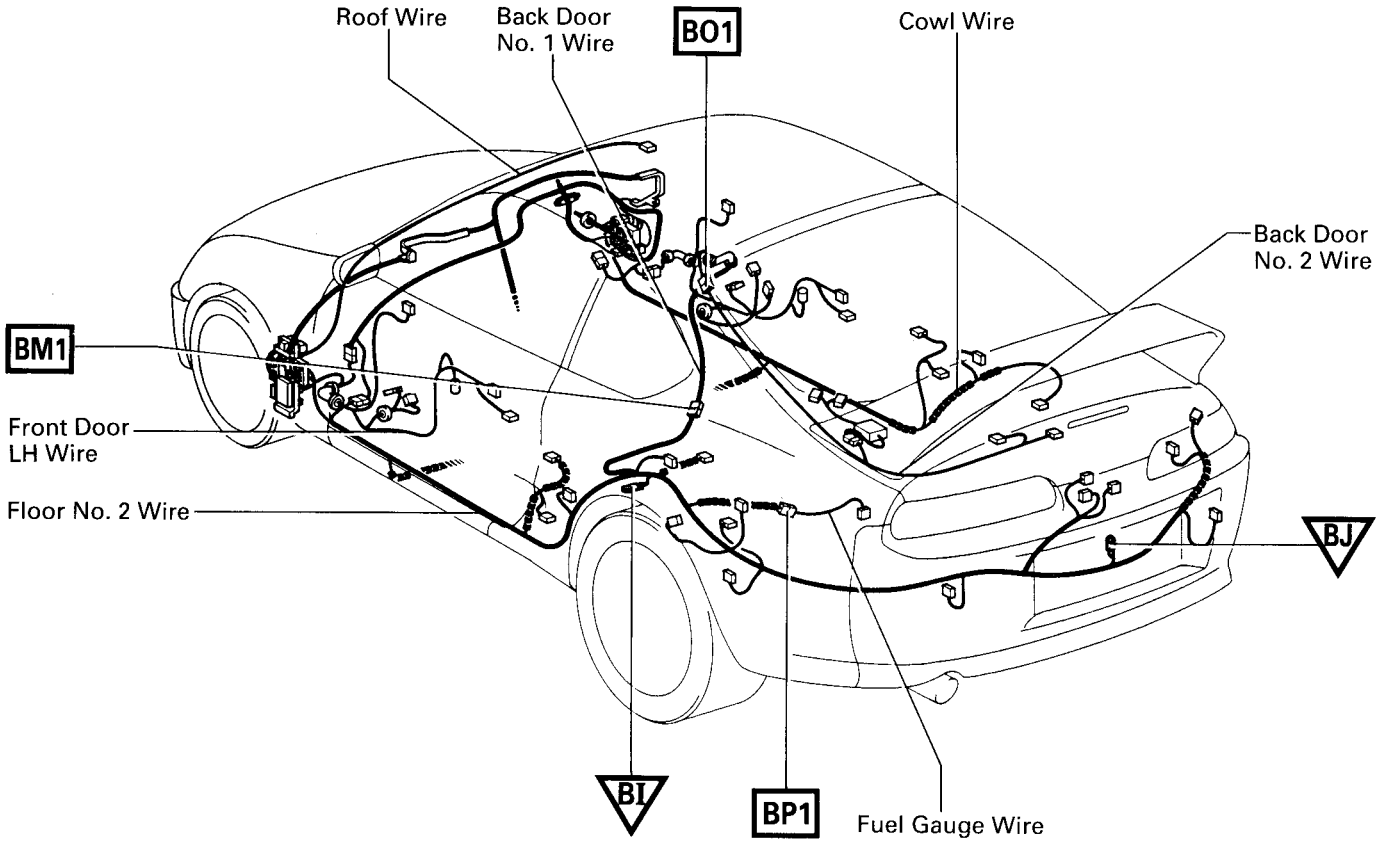

○ : Location of Splice Points

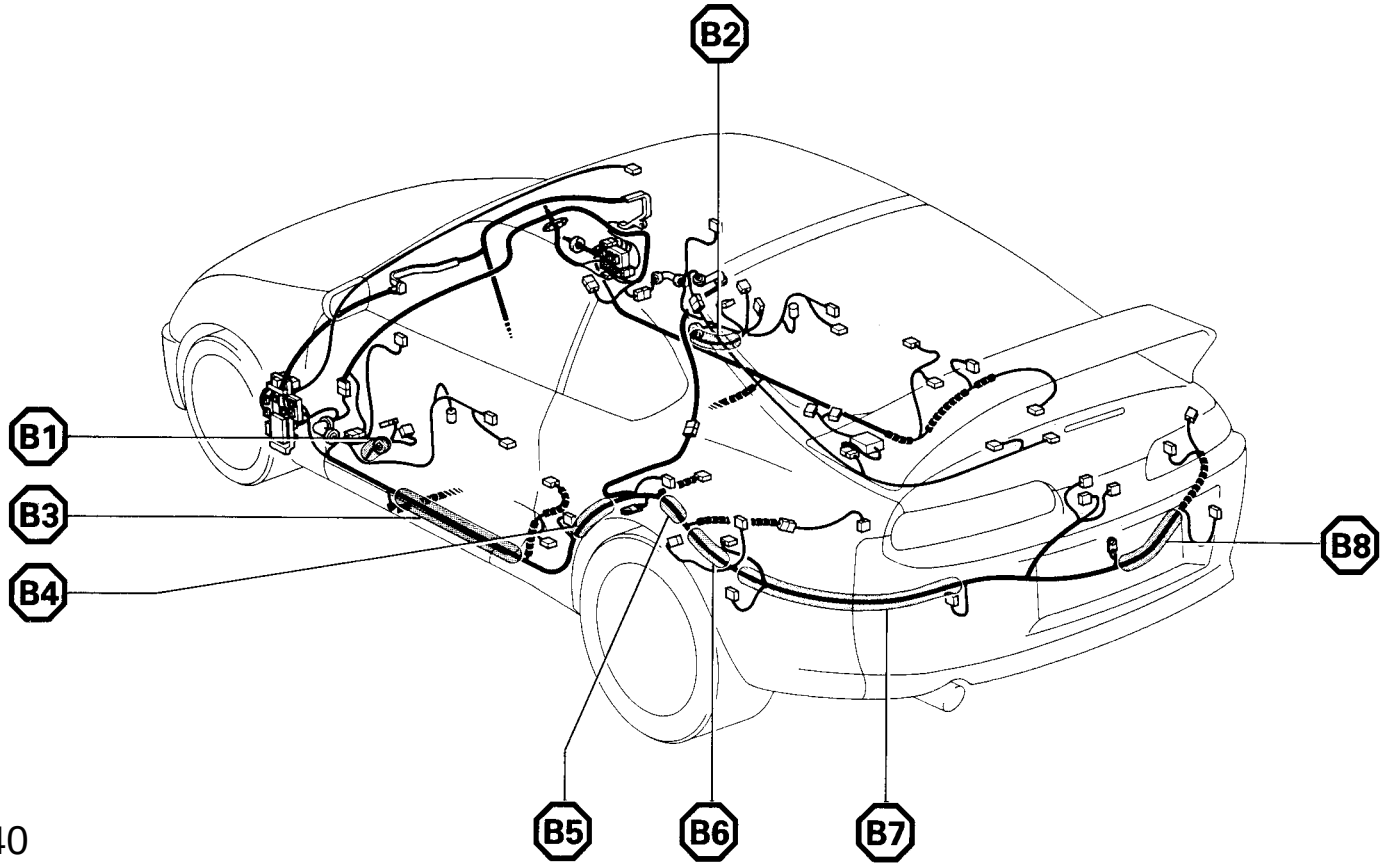

Connector Joining Wire Harness and Wire Harness

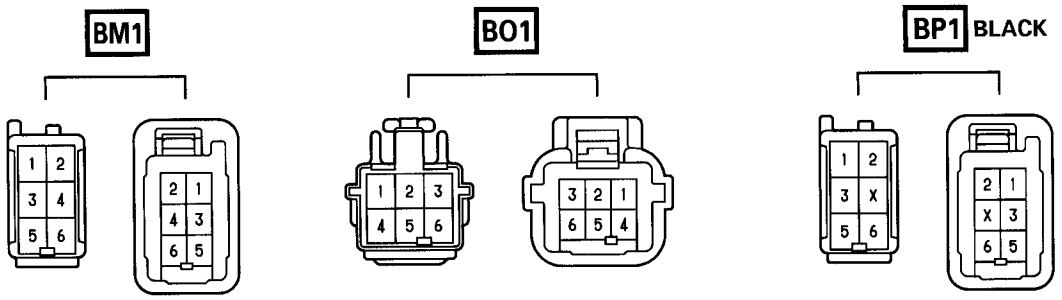

CODE	JOINING WIRE HARNESS AND WIRE HARNESS (CONNECTOR LOCATION)
BM1	BACK DOOR NO. 1 WIRE AND FLOOR NO. 2 WIRE (LEFT SIDE OF PACKAGE TRAY TRIM)
BO1	BACK DOOR NO. 2 WIRE AND BACK DOOR NO. 1 WIRE (BACK DOOR UPPER LEFT)
BP1	FUEL GAUGE WIRE AND FLOOR NO. 2 WIRE (LUGGAGE ROOM FRONT LH)

▭ : Location of Connector Joining Wire Harness and Wire Harness

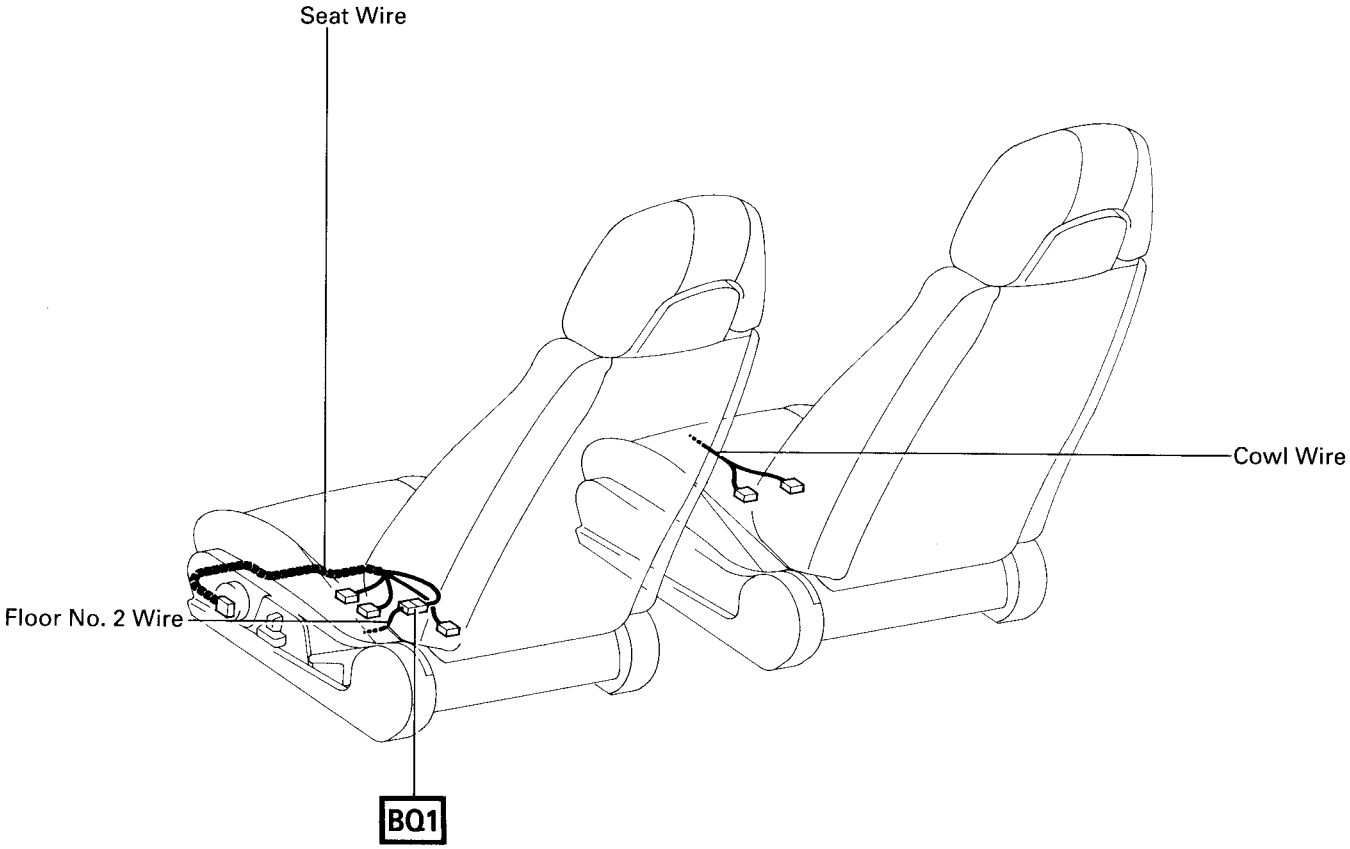

⬡ : Location of Splice Points

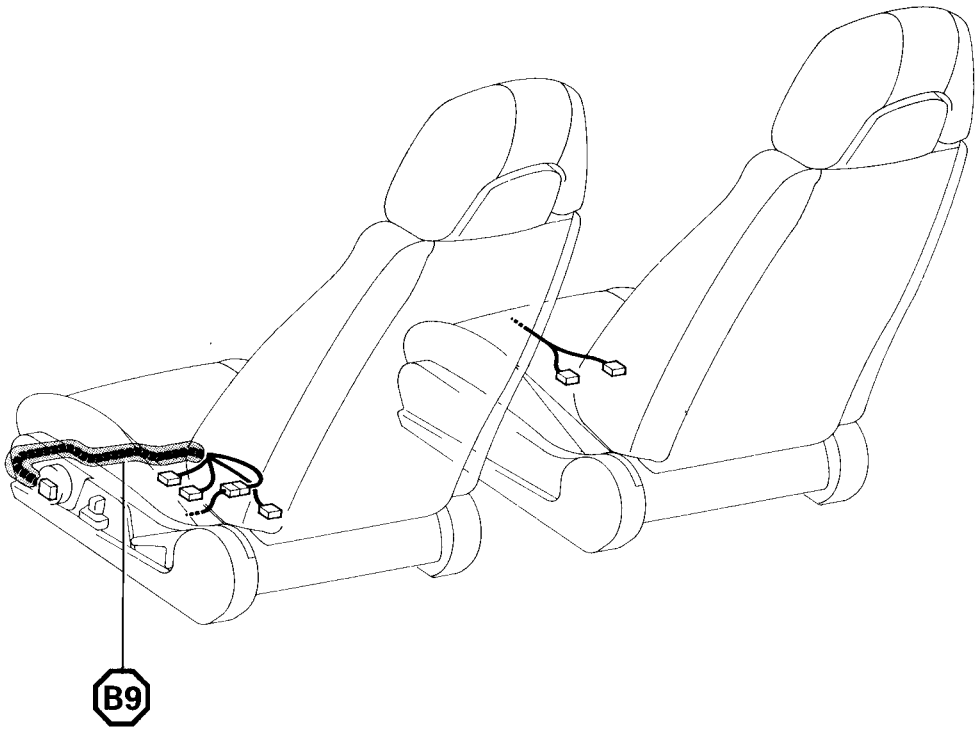

Connector Joining Wire Harness and Wire Harness

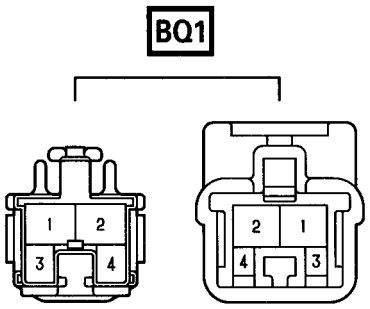

CODE	JOINING WIRE HARNESS AND WIRE HARNESS (CONNECTOR LOCATION)
BQ1	FLOOR NO. 2 WIRE AND SEAT WIRE (UNDER THE FRONT LH SEAT)

POWER SOURCE (Current Flow Chart)

The chart below shows the route by which current flows from the battery to each electrical source (Fusible Link, Circuit Breaker, Fuse, etc.) and other parts.

The next page and following pages show the parts to which each electrical source outputs current.

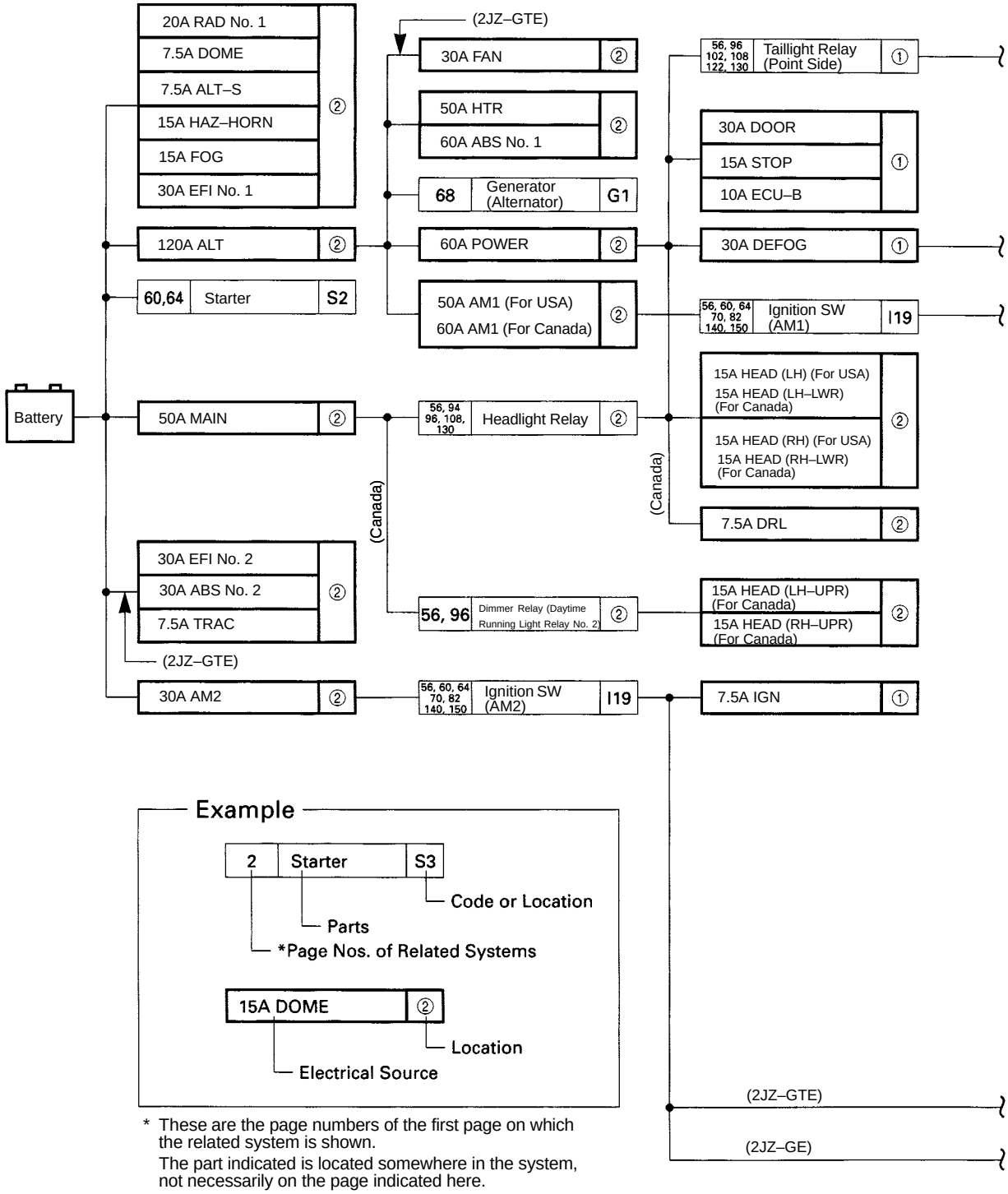

* These are the page numbers of the first page on which the related system is shown.
The part indicated is located somewhere in the system, not necessarily on the page indicated here.

[LOCATION] (1) : J/B No. 1 (See page 20) (2) : R/B No. 2 (See page 22) (3) : R/B No. 4 (See page 23)

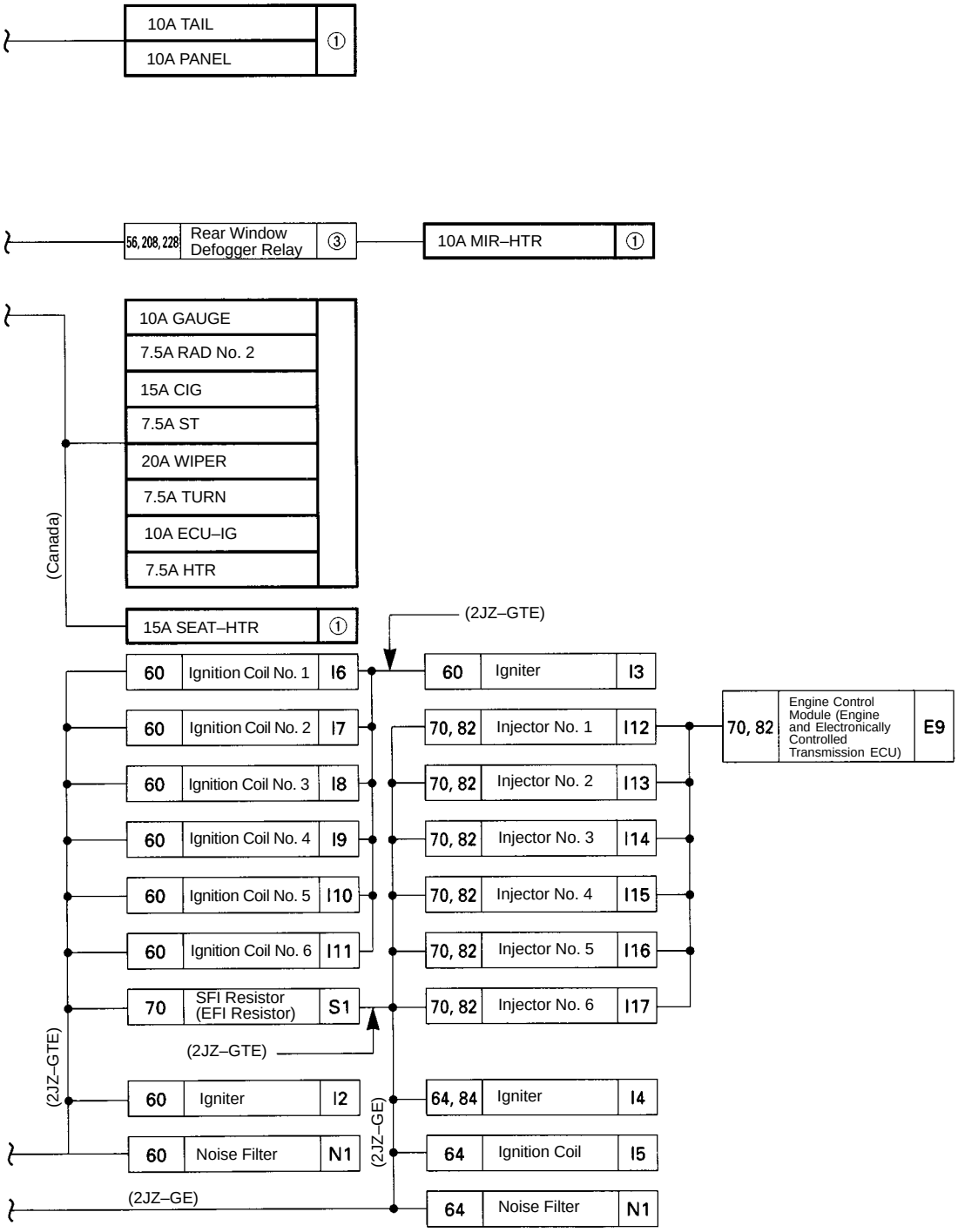

(4) : R/B No. 5 (See page 23)

POWER SOURCE (Current Flow Chart)

*1: (FOR CANADA)
*2: (FOR USA)

Location	CB or Fuse		*Page Nos. of Related Systems	228	228	228	159 164	159	159	228	208 228	159	159	164	164	159 164	228	122	210	210	116	164 220	228	206	206
			Parts	A/C Condenser Fan Motor	A/C Single Pressure SW [A/C Triple Pressure SW]	A/C Magnetic Clutch and Lock Sensor	ABS Actuator	ABS Relay		A/C Amplifier		ABS ECU		ABS and Traction ECU		ABS Lateral Acceleration Sensor	Air Inlet Control Servo Motor	Ashtray Illumination	Auto Antenna Control Relay	Auto Antenna Motor	Back–Up Light SW (for M/T)	Brake Fluid Level Warning SW	Blower Motor Control Relay	Buckle SW LH	Buckle SW RH
			Code or Location	A2	A3	A4	A6	A8	A9	A12	A14	A18	A19	A20	A22	A23	A24	A29	A30	A33	B1	B2	B4	B6	B7
①	7.5A	HTR			●	●				●	●						●								
	7.5A	IGN																							
	7.5A	RAD No. 2																	●						
	7.5A	ST																							
	7.5A	TURN																							
	10A	ECU–B									●		●	●											
	10A	ECU–IG											●	●		●			●					●	●
	10A	GAUGE					●		●		●	●	●	●	●						●	●			
	10A	MIR–HTR																							
	10A	PANEL																●							
	10A	TAIL																							
	15A	CIG								●															
	15A	SEAT–HTR																							
	15A	STOP										●			●										
	20A	WIPER																							
	30A	DEFOG																							
	30A	DOOR																							
②	7.5A	ALT–S																							
	7.5A	DOME																							
	7.5A	DRL																							
	7.5A	TRAC																							
	15A	FOG																							
	15A	HAZ–HORN																							
	15A	HEAD (LH) *2																							
	15A	HEAD (LH–LWR) *1																							
	15A	HEAD (LH–UPR) *1																							
	15A	HEAD (RH) *2																							
	15A	HEAD (RH–LWR) *1																							
	15A	HEAD (RH–UPR) *1																							
	20A	RAD No. 1																	●	●					
	30A	ABS No. 2												●											
	30A	EFI No. 1																							
	30A	EFI No. 2																							
	30A	FAN		●																					
	50A	HTR																					●		
	50A	MAIN																							
	60A	ABS No. 1					●	●	●				●	●	●										
	60A	POWER																							

* These are the page numbers of the first page on which the related system is shown.
The part indicated is located somewhere in the system, not necessarily on the page indicated here.

[LOCATION] (1) : J/B No. 1 (See page 20) (2) : R/B No. 2 (See page 22) (3) : R/B No. 4 (See page 23)

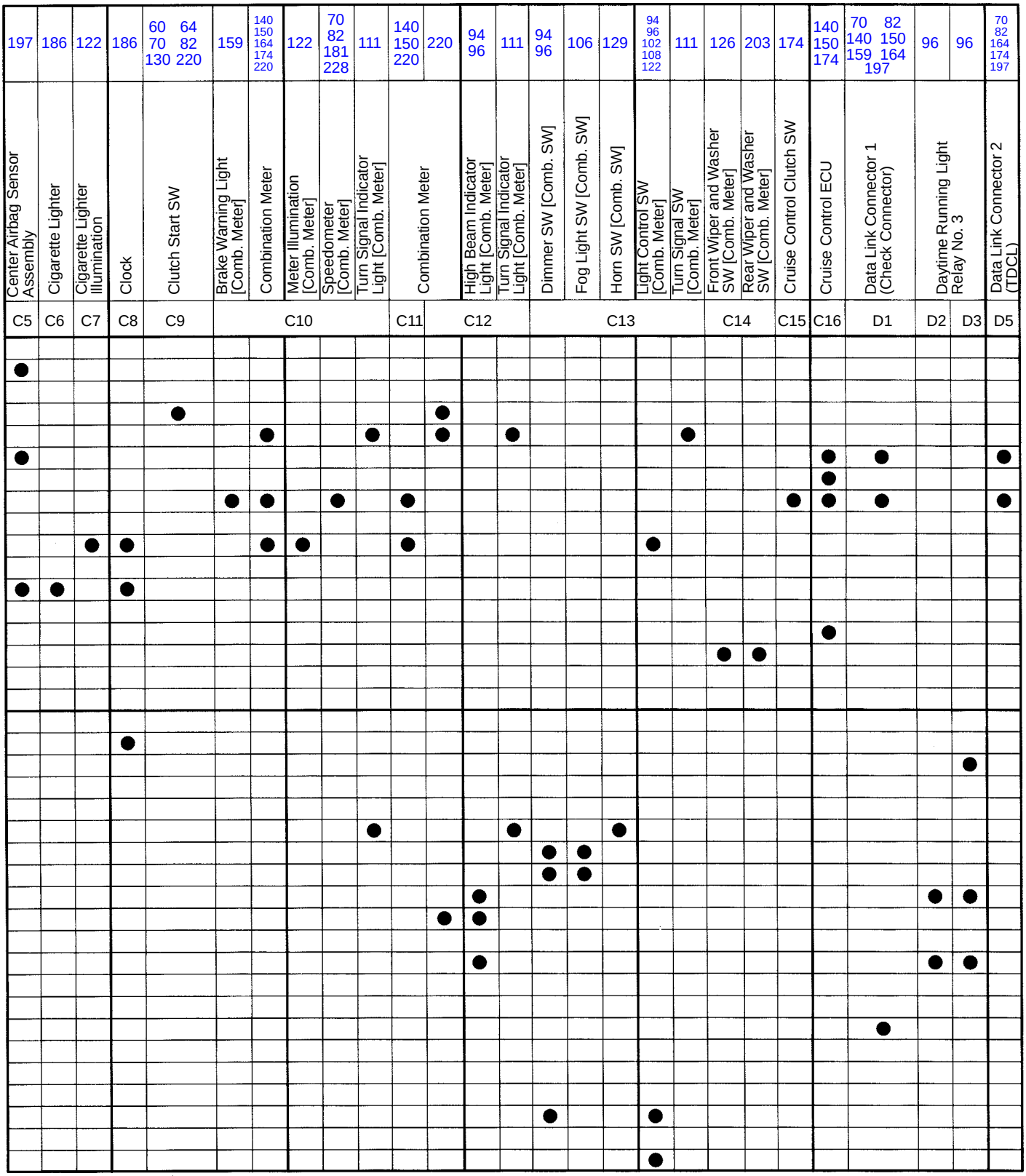

(4) : R/B No. 5 (See page 23)

POWER SOURCE (Current Flow Chart)

*1: (FOR CANADA)
*2: (FOR USA)

Location	CB or Fuse		*Page Nos. of Related Systems	Daytime Running Light Relay (Main)	Diode (for Interior Light)	Diode (for Idle–Up)	Door Courtesy SW LH	Door Courtesy SW RH	Door Key Lock and Unlock SW LH	Electronically Controlled Transmission Solenoid	Engine Coolant Temp. Sender (Water Temp. Sender)	Engine Coolant Temp. SW (Water Temp. SW)	Engine Oil Level Sensor	Electronically Controlled Transmission Pattern Select SW	Engine Control Module (Engine and Electronically Controlled Transmission ECU)		Front Fog Light and Parking Light LH	Front Fog Light and Parking Light RH	Front Side Marker Light LH	Front Side Marker Light RH	Front Turn Signal Light LH	Front Turn Signal Light RH	Front Wiper Motor
				96 164 220	118	70 82	118	118	118	140	220	228	220	112	60 64 70 82 140 150	70 82 140 150 228	102 106	102 106	102	102	111	111	126
			Parts																				
			Code or Location																				
			CB or Fuse	D6	D7	D8	D10	D11	D12	E2	E4	E5	E7	E8	E9	E10	F3	F4	F5	F6	F7	F8	F9
①	7.5A	HTR										●				●							
	7.5A	IGN														●							
	7.5A	RAD No. 2																					
	7.5A	ST													●								
	7.5A	TURN																			●	●	
	10A	ECU–B																					
	10A	ECU–IG																					
	10A	GAUGE	●								●		●		●	●							
	10A	MIR–HTR			●											●							
	10A	PANEL			●									●		●							
	10A	TAIL															●	●	●	●			
	15A	CIG																					
	15A	SEAT–HTR																					
	15A	STOP														●							
	20A	WIPER																					●
	30A	DEFOG																					
	30A	DOOR																					
②	7.5A	ALT–S																					
	7.5A	DOME	●	●		●	●	●															
	7.5A	DRL																					
	7.5A	TRAC																					
	15A	FOG															●	●					
	15A	HAZ–HORN																			●	●	
	15A	HEAD (LH) *2																					
	15A	HEAD (LH–LWR) *1																					
	15A	HEAD (LH–UPR) *1																					
	15A	HEAD (RH) *2																					
	15A	HEAD (RH–LWR) *1																					
	15A	HEAD (RH–UPR) *1																					
	20A	RAD No. 1																					
	30A	ABS No. 2																					
	30A	EFI No. 1								●					●	●							
	30A	EFI No. 2																					
	30A	FAN																					
	50A	HTR																					
	50A	MAIN	●																				
	60A	ABS No. 1																					
	60A	POWER	●																				

* These are the page numbers of the first page on which the related system is shown.
The part indicated is located somewhere in the system, not necessarily on the page indicated here.

[LOCATION] (1) : J/B No. 1 (See page 20) (2) : R/B No. 2 (See page 22) (3) : R/B No. 4 (See page 23)

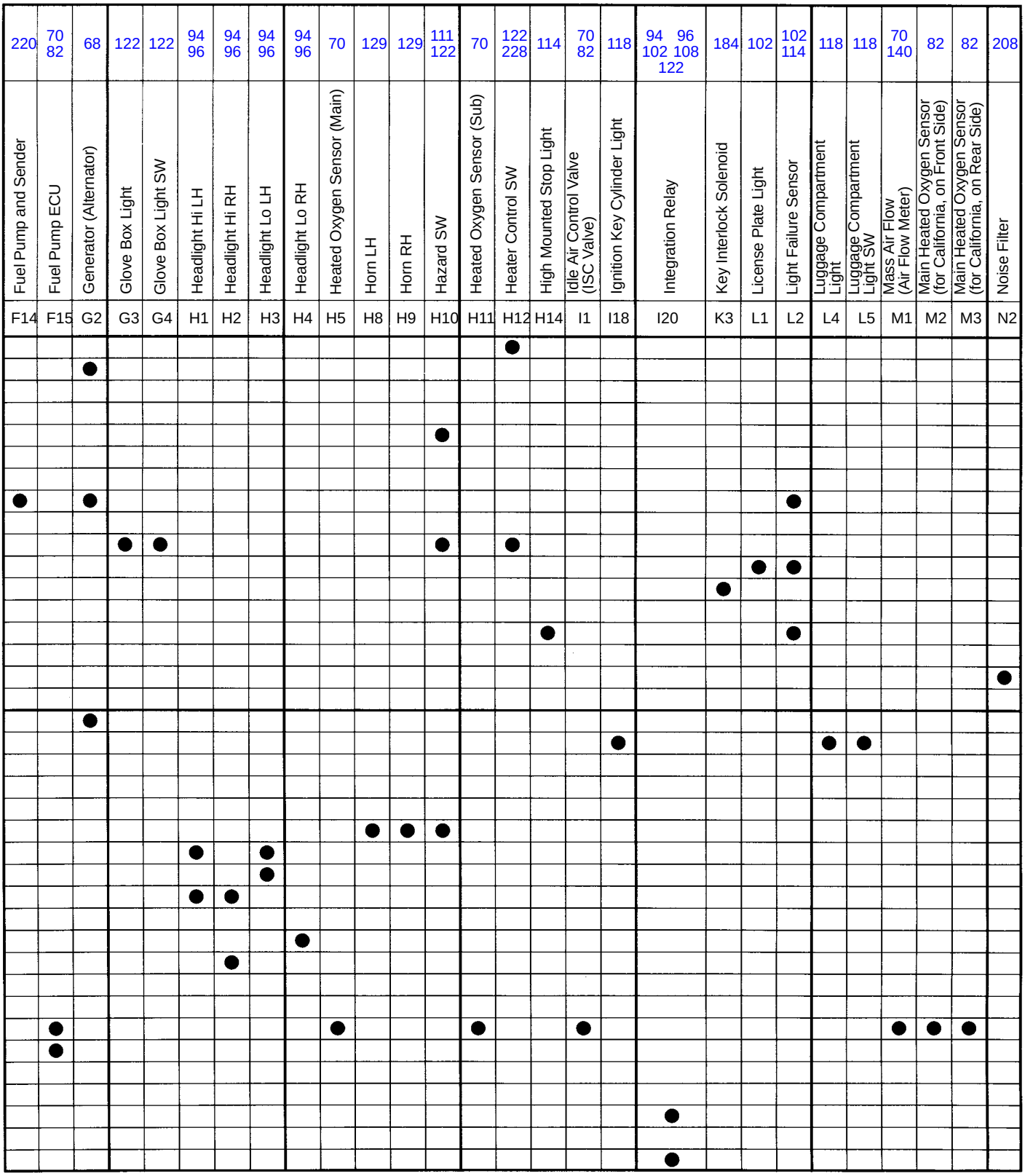

(4) : R/B No. 5 (See page 23)

POWER SOURCE (Current Flow Chart)

*1: (FOR CANADA)
*2: (FOR USA)

Location	CB or Fuse		*Page Nos. of Related Systems	208	220	122 140 150	60 64 70 82 116 130 140 150 174 220	181	159 164 220	118	136	136	136	136	190	190	228	228	228	122 210 218	122	188	122	116
			Parts	Noise Filter	Oil Pressure SW	O/D Main SW	Park/Neutral Position SW (Neutral Start SW), Back–Up Light SW and A/T Indicator Light SW (for A/T)	PPS ECU	Parking Brake SW	Personal Light	Power Window Control SW RH	Power Window Master SW and Door Lock Control SW LH	Power Window Motor LH	Power Window Motor RH	Power Seat Control SW (for Driver's Seat)	Power Seat Motor (for Driver's Seat Slide Control)	Radiator Fan Motor	Radiator Fan Relay No. 1	Radiator Fan Relay No. 2	Radio and Player (w/o Stereo Power Amplifier)	Radio and Player (w/ Stereo Power Amplifier)	Remote Control Mirror SW	Rheostat	Back–Up Light LH [Rear Comb. Light LH]
			Code or Location	N3	O2	O5	P2	P4	P5	P6	P7	P8	P9	P10	P11	P12	R1	R2	R3	R4	R6	R7	R8	R9
①	7.5A	HTR																●	●					
	7.5A	IGN																						
	7.5A	RAD No. 2																		●		●		
	7.5A	ST					●																	
	7.5A	TURN																						
	10A	ECU–B																						
	10A	ECU–IG						●												●	●			
	10A	GAUGE		●	●	●			●															●
	10A	MIR–HTR																						
	10A	PANEL			●															●	●		●	
	10A	TAIL																						
	15A	CIG																						
	15A	SEAT–HTR																						
	15A	STOP																						
	20A	WIPER																						
	30A	DEFOG	●																					
	30A	DOOR									●	●	●	●	●	●								
②	7.5A	ALT–S																						
	7.5A	DOME								●														
	7.5A	DRL																						
	7.5A	TRAC																						
	15A	FOG																						
	15A	HAZ–HORN																						
	15A	HEAD (LH) *2																						
	15A	HEAD (LH–LWR) *1																						
	15A	HEAD (LH–UPR) *1																						
	15A	HEAD (RH) *2																						
	15A	HEAD (RH–LWR) *1																						
	15A	HEAD (RH–UPR) *1																						
	20A	RAD No. 1																		●				
	30A	ABS No. 2																						
	30A	EFI No. 1																						
	30A	EFI No. 2																						
	30A	FAN															●	●	●					
	50A	HTR																						
	50A	MAIN																						
	60A	ABS No. 1																						
	60A	POWER																						

* These are the page numbers of the first page on which the related system is shown.
The part indicated is located somewhere in the system, not necessarily on the page indicated here.

[LOCATION] (1) : J/B No. 1 (See page 20) (2) : R/B No. 2 (See page 22) (3) : R/B No. 4 (See page 23)

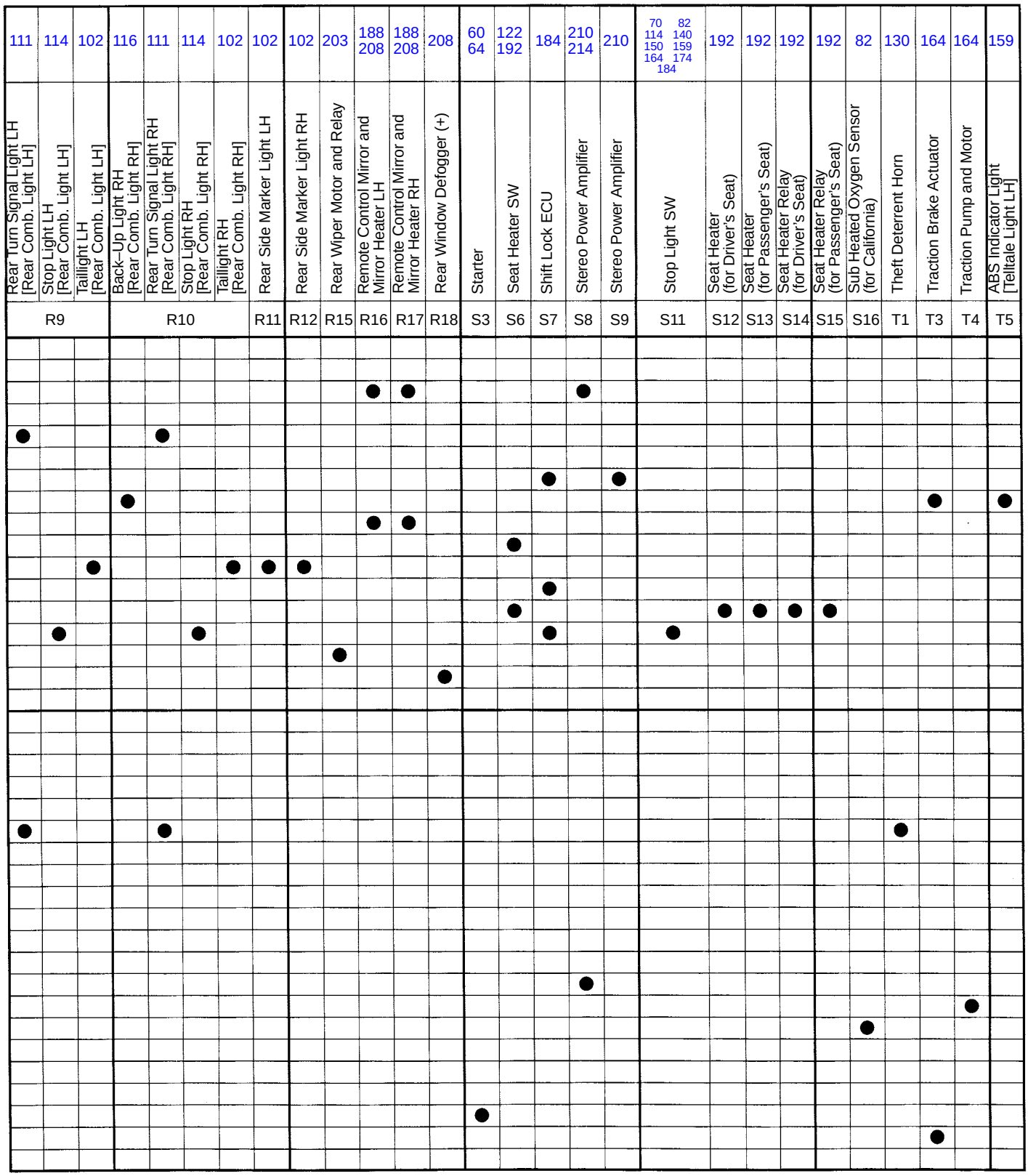

(4) : R/B No. 5 (See page 23)

POWER SOURCE (Current Flow Chart)

*1: (FOR CANADA)
*2: (FOR USA)

Location	CB or Fuse		*Page Nos. of Related Systems																								
			70 82	164 220	68	118	102 114	194	197	70 82 122 140 150 174 181 220 228	60 64 130	122	164	206	206	82	70 82	70 82	70	70	70 82	70
			Malfunction Indicator Lamp (Check Engine Warning Light) [Telltale Light LH]	Telltale Light LH	Charge Warning Light [Telltale Light RH]	Open Door Warning Light [Telltale Light RH]	Rear Light Warning Light [Telltale Light RH]	Seat Belt Warning Light [Telltale Light RH]	SRS Warning Light [Telltale Light RH]	Telltale Light RH	Theft Deterrent ECU	TRAC Off SW	Traction ECU	Tension Reducer Solenoid LH	Tension Reducer Solenoid RH	VSV (for ACIS)	VSV (for EGR)	VSV (for EVAP)	VSV (for Exhaust Bypass Valve)	VSV (for Exhaust Gas Control Valve)	VSV (for Fuel Pressure Up)	VSV (for Intake Air Control Valve)
			T5		T6						T7	T8	T9	T11	T12	V1	V2	V3	V4	V5	V6	V7
①	7.5A	HTR																				
	7.5A	IGN			●					●												
	7.5A	RAD No. 2																				
	7.5A	ST									●											
	7.5A	TURN																				
	10A	ECU–B							●	●			●									
	10A	ECU–IG									●		●	●	●							
	10A	GAUGE	●	●			●	●		●			●									
	10A	MIR–HTR																				
	10A	PANEL								●		●										
	10A	TAIL																				
	15A	CIG									●											
	15A	SEAT–HTR																				
	15A	STOP											●									
	20A	WIPER																				
	30A	DEFOG																				
	30A	DOOR									●											
②	7.5A	ALT–S																				
	7.5A	DOME				●				●	●											
	7.5A	DRL																				
	7.5A	TRAC											●									
	15A	FOG																				
	15A	HAZ–HORN									●											
	15A	HEAD (LH) *2																				
	15A	HEAD (LH–LWR) *1																				
	15A	HEAD (LH–UPR) *1																				
	15A	HEAD (RH) *2																				
	15A	HEAD (RH–LWR) *1																				
	15A	HEAD (RH–UPR) *1																				
	20A	RAD No. 1																				
	30A	ABS No. 2																				
	30A	EFI No. 1														●	●	●	●	●	●	●
	30A	EFI No. 2																				
	30A	FAN																				
	50A	HTR																				
	50A	MAIN									●											
	60A	ABS No. 1																				
	60A	POWER									●											

* These are the page numbers of the first page on which the related system is shown.
The part indicated is located somewhere in the system, not necessarily on the page indicated here.

[LOCATION] (1) : J/B No. 1 (See page 20) (2) : R/B No. 2 (See page 22) (3) : R/B No. 4 (See page 23)

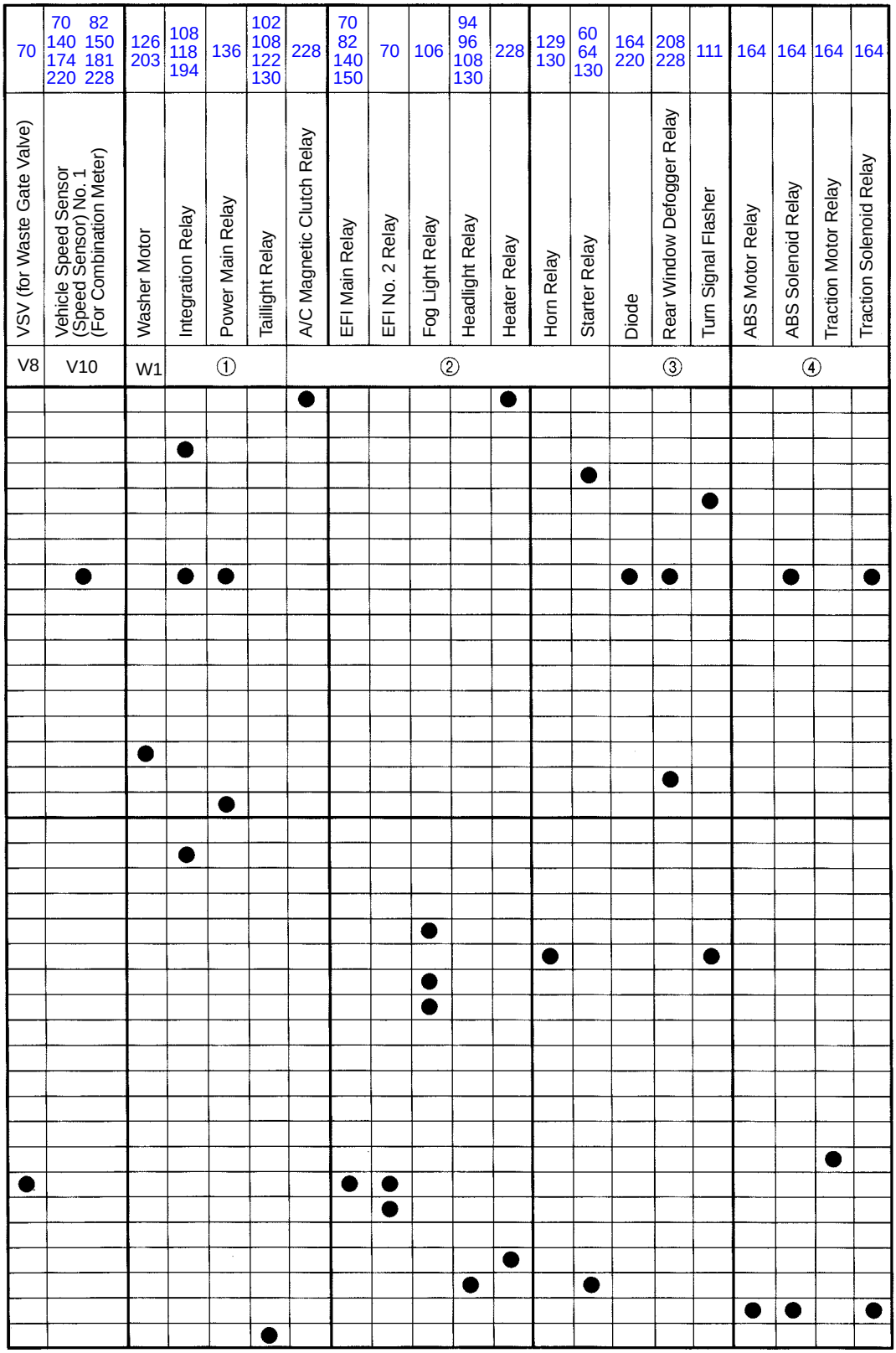

: R/B No. 5 (See page 23)

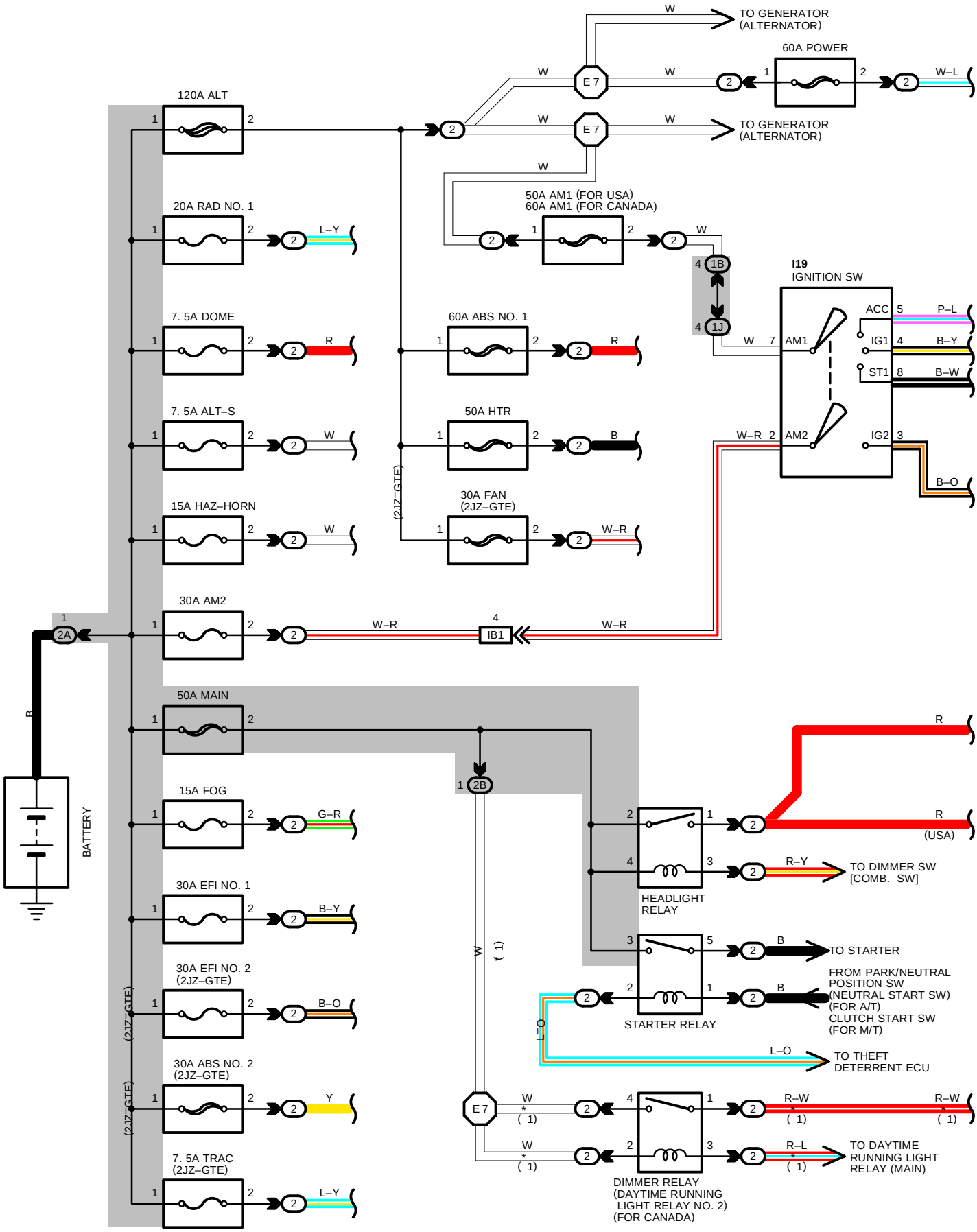
W
TO GENERATOR (ALTERNATOR)
60A POWER
W
E 7
W
W–L
120A ALT
W
E 7
W
TO GENERATOR (ALTERNATOR)
W
50A AM1 (FOR USA)
60A AM1 (FOR CANADA)
20A RAD NO. 1
L–Y
W
4 1B
4 1J
I19
IGNITION SW
7. 5A DOME
60A ABS NO. 1
R
W 7 AM1
ACC 5 P–L
IG1 4 B–Y
ST1 8 B–W
7. 5A ALT–S
50A HTR
W
B
W–R 2 AM2
IG2 3
B–O
15A HAZ–HORN
30A FAN (2JZ–GTE)
W
W–R
(2JZ–GTE)
30A AM2
W–R
4 IB1
W–R
1 2A
50A MAIN
1 2B
BATTERY
R
15A FOG
G–R
R
R
(USA)
30A EFI NO. 1
B–Y
R–Y
TO DIMMER SW [COMB. SW]
HEADLIGHT RELAY
30A EFI NO. 2 (2JZ–GTE)
B–O
B
TO STARTER
W
(1)
FROM PARK/NEUTRAL POSITION SW (NEUTRAL START SW) (FOR A/T) CLUTCH START SW (FOR M/T)
B
STARTER RELAY
L–O
L–O
TO THEFT DETERRENT ECU
30A ABS NO. 2 (2JZ–GTE)
Y
E 7
W
(1)
R–W
(1)
R–W
(1)
W
(1)
R–L
(1)
TO DAYTIME RUNNING LIGHT RELAY (MAIN)
7. 5A TRAC (2JZ–GTE)
L–Y
DIMMER RELAY (DAYTIME RUNNING LIGHT RELAY NO. 2) (FOR CANADA)

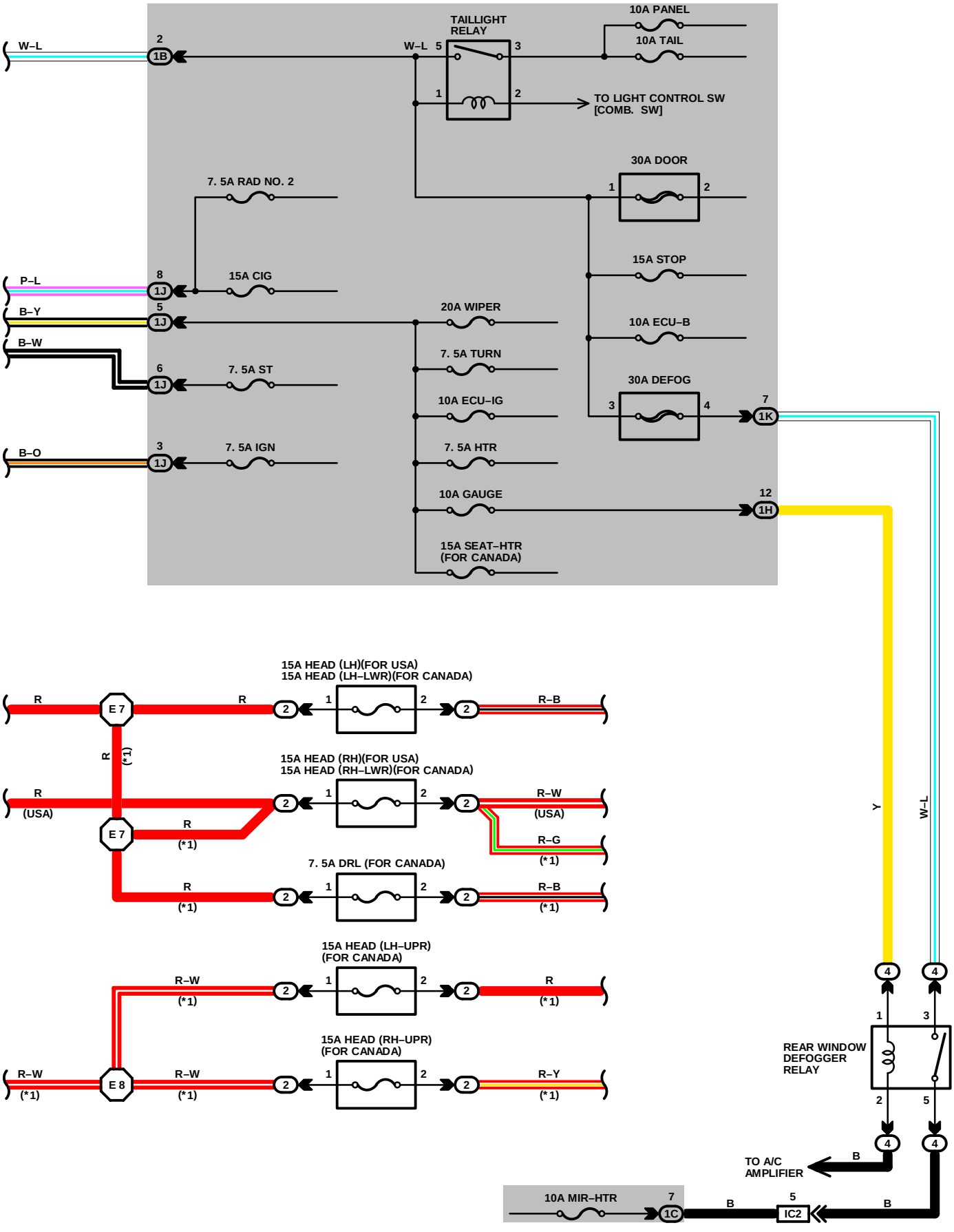
TAILLIGHT RELAY
10A PANEL
10A TAIL
W–L
2
1B
W–L 5
3
1
2
TO LIGHT CONTROL SW [COMB. SW]
30A DOOR
1
2
7. 5A RAD NO. 2
15A STOP
P–L
8
1J
15A CIG
B–Y
5
1J
20A WIPER
10A ECU–B
B–W
7. 5A TURN
6
1J
7. 5A ST
30A DEFOG
3
4
7
1K
10A ECU–IG
B–O
3
1J
7. 5A IGN
7. 5A HTR
10A GAUGE
12
1H
15A SEAT–HTR (FOR CANADA)
15A HEAD (LH)(FOR USA)
15A HEAD (LH–LWR)(FOR CANADA)
R
E 7
R
1
2
2
2
R–B
R
(*1)
15A HEAD (RH)(FOR USA)
15A HEAD (RH–LWR)(FOR CANADA)
R
(USA)
R–W
(USA)
R–G
(*1)
R
(*1)
7. 5A DRL (FOR CANADA)
R
(*1)
R–B
(*1)
15A HEAD (LH–UPR)
(FOR CANADA)
R–W
(*1)
R
(*1)
15A HEAD (RH–UPR)
(FOR CANADA)
R–W
(*1)
E 8
R–W
(*1)
R–Y
(*1)
Y
W–L
4
4
1
3
REAR WINDOW DEFOGGER RELAY
2
5
4
4
TO A/C AMPLIFIER
B
10A MIR–HTR
7
1C
B
5
IC2
B

POWER SOURCE

SERVICE HINTS

HEADLIGHT RELAY (FOR USA)
2–1 : CLOSED WITH LIGHT CONTROL SW AT **HEAD** POSITION OR DIMMER SW AT **FLASH** POSITION

HEADLIGHT RELAY (FOR CANADA)
2–1 : CLOSED WITH LIGHT CONTROL SW AT **HEAD** POSITION OR DIMMER SW AT **FLASH** POSITION
: CLOSED WITH ENGINE RUNNING AND PARKING BRAKE LEVER RELEASED (PARKING BRAKE SW OFF)

TAILLIGHT RELAY
5–3: CLOSED WITH LIGHT CONTROL SW AT **TAIL** OR **HEAD** POSITION

I19 IGNITION SW
7–5 : CLOSED WITH IGNITION KEY AT **ACC** OR **ON** POSITION
7–4 : CLOSED WITH IGNITION KEY AT **ON** OR **ST** POSITION
2–3 : CLOSED WITH IGNITION KEY AT **ON** OR **ST** POSITION
7–8 : CLOSED WITH IGNITION KEY AT **ST** POSITION

: PARTS LOCATION

CODE	SEE PAGE	CODE	SEE PAGE	CODE	SEE PAGE
I19	29				

: RELAY BLOCKS

CODE	SEE PAGE	RELAY BLOCKS (RELAY BLOCK LOCATION)
2	22	R/B NO. 2 (ENGINE COMPARTMENT LEFT)
4	23	R/B NO. 4 (LEFT KICK PANEL)

: JUNCTION BLOCK AND WIRE HARNESS CONNECTOR

CODE	SEE PAGE	JUNCTION BLOCK AND WIRE HARNESS (CONNECTOR LOCATION)
1B	20	ENGINE ROOM MAIN WIRE AND J/B NO. 1 (LEFT KICK PANEL)
1C	20	FLOOR NO. 2 WIRE AND J/B NO. 1 (LEFT KICK PANEL)
1H	20	COWL WIRE AND J/B NO. 1 (LEFT KICK PANEL)
1J		
1K		
2A	22	BATTERY AND J/B NO. 2 (ENGINE COMPARTMENT LEFT)
2B	22	ENGINE ROOM MAIN WIRE AND J/B NO. 2 (ENGINE COMPARTMENT LEFT)

: CONNECTOR JOINING WIRE HARNESS AND WIRE HARNESS

CODE	SEE PAGE	JOINING WIRE HARNESS AND WIRE HARNESS (CONNECTOR LOCATION)
IB1	36	ENGINE ROOM MAIN WIRE AND COWL WIRE (LEFT KICK PANEL)
IC2	36	FLOOR NO. 2 WIRE AND COWL WIRE (LEFT KICK PANEL)

: SPLICE POINTS

CODE	SEE PAGE	WIRE HARNESS WITH SPLICE POINTS	CODE	SEE PAGE	WIRE HARNESS WITH SPLICE POINTS
E 7	32	ENGINE ROOM MAIN WIRE	**E 8**	32	ENGINE ROOM MAIN WIRE

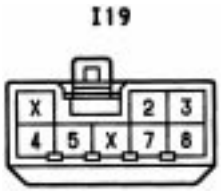

STARTING AND IGNITION (FOR 2JZ–GTE)

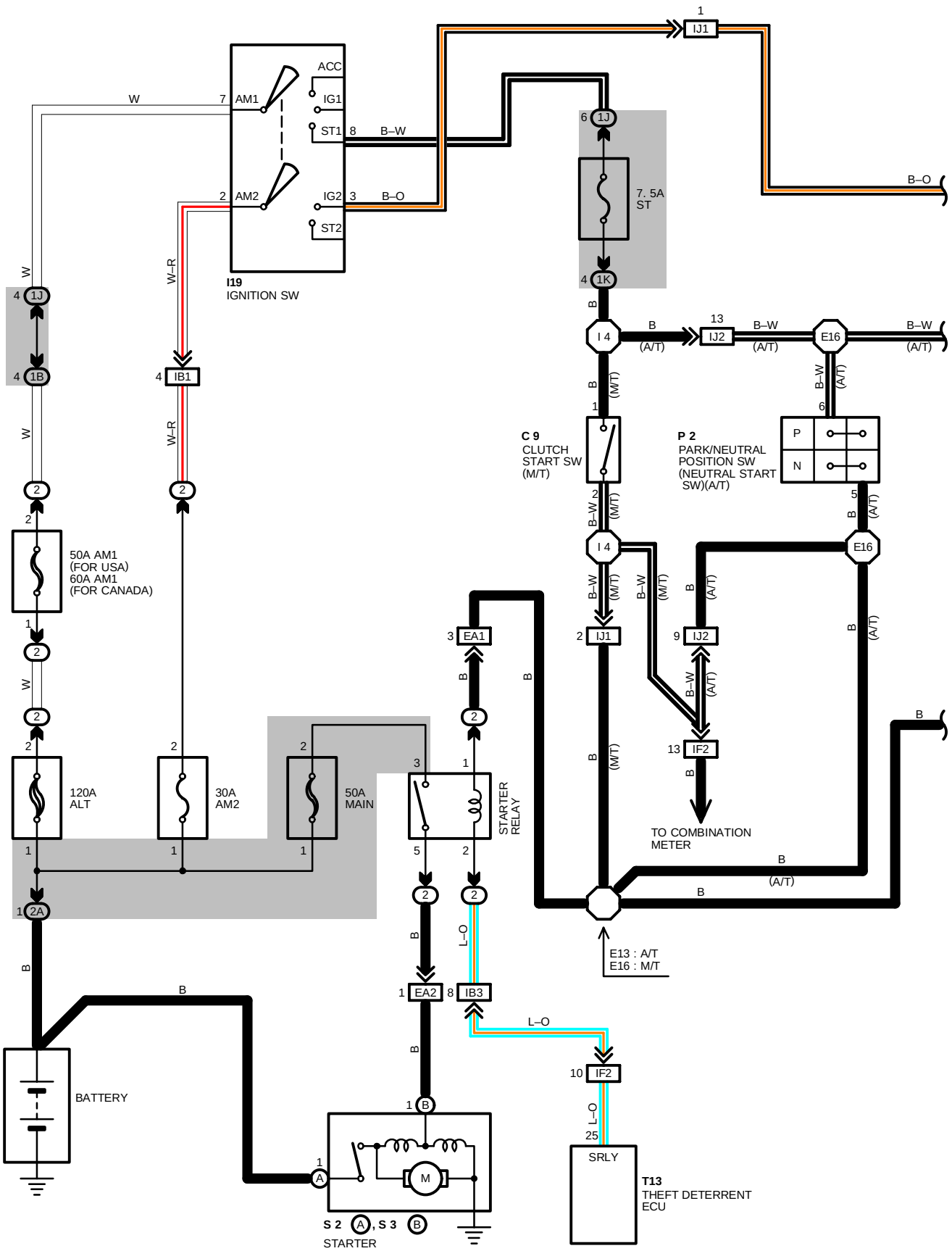

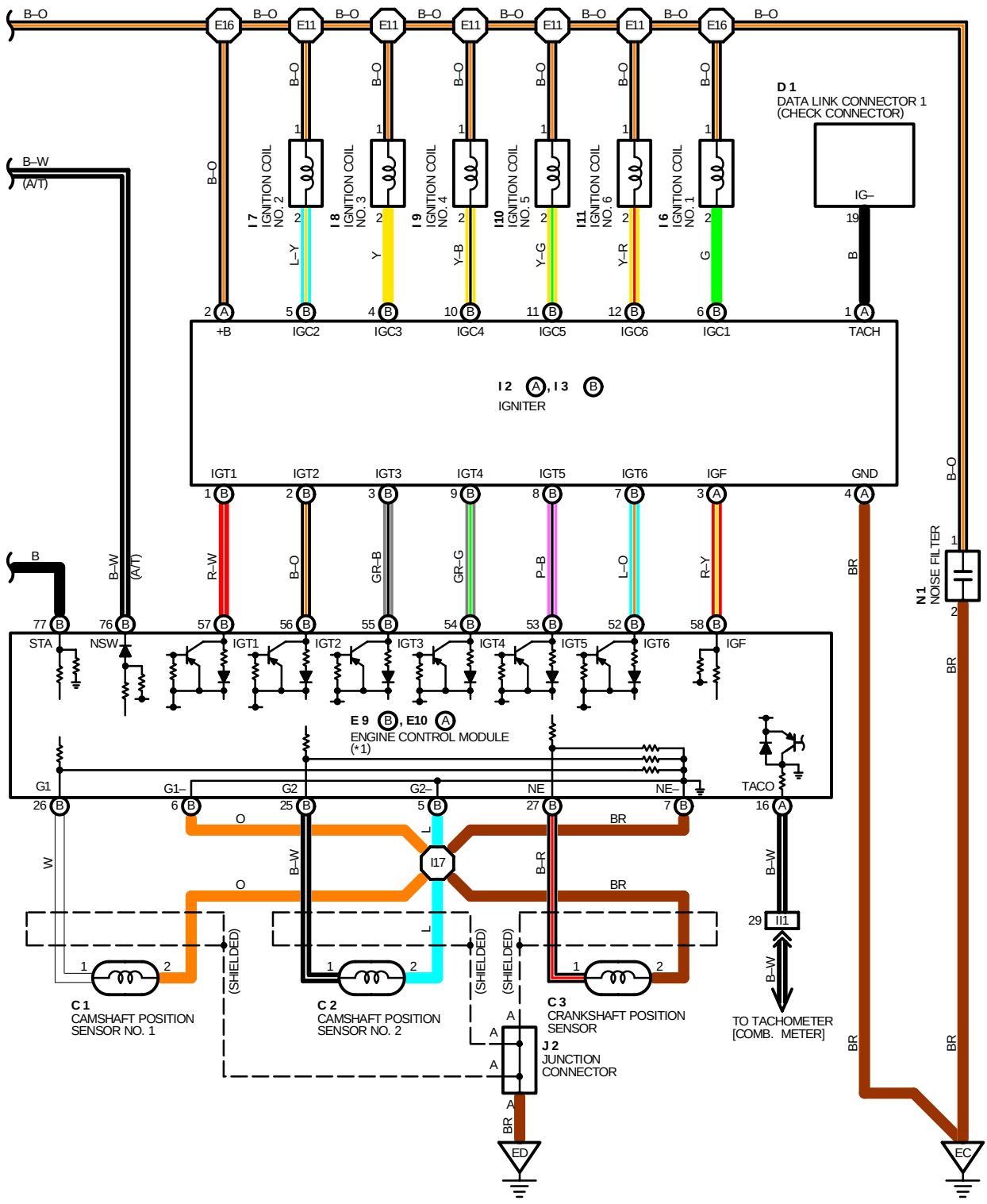
B–O
E16
E11
B–W
(A/T)
I7 IGNITION COIL NO. 2
I8 IGNITION COIL NO. 3
I9 IGNITION COIL NO. 4
I10 IGNITION COIL NO. 5
I11 IGNITION COIL NO. 6
I6 IGNITION COIL NO. 1
L–Y
Y
Y–B
Y–G
Y–R
G
D1
DATA LINK CONNECTOR 1
(CHECK CONNECTOR)
IG–
19
B
+B
IGC2
IGC3
IGC4
IGC5
IGC6
IGC1
TACH
I2 A, I3 B
IGNITER
IGT1
IGT2
IGT3
IGT4
IGT5
IGT6
IGF
GND
R–W
GR–B
GR–G
P–B
L–O
R–Y
BR
N1
NOISE FILTER
STA
NSW
E9 B, E10 A
ENGINE CONTROL MODULE
(*1)
G1
G1–
G2
G2–
NE
NE–
TACO
O
W
L
I17
B–R
I11
TO TACHOMETER
[COMB. METER]
C1
CAMSHAFT POSITION
SENSOR NO. 1
C2
CAMSHAFT POSITION
SENSOR NO. 2
C3
CRANKSHAFT POSITION
SENSOR
(SHIELDED)
J2
JUNCTION
CONNECTOR
ED
EC

STARTING AND IGNITION (FOR 2JZ–GTE)

SERVICE HINTS

I19 IGNITION SW
7–8 : CLOSED WITH IGNITION SW AT **ST** POSITION
2–3 : CLOSED WITH IGNITION SW AT **ON** OR **ST** POSITION

P 2 PARK/NEUTRAL POSITION SW (NEUTRAL START SW) (A/T)
6–5 : CLOSED WITH A/T SHIFT LEVER IN **P** OR **N** POSITION

C 9 CLUTCH START SW (M/T)
1–2 : CLOSED WITH CLUTCH PEDAL FULLY DEPRESSED

S 2(A), S 3(B) STARTER
POINTS CLOSED WITH PARK/NEUTRAL POSITION SW (NEUTRAL START SW) ON AND IGNITION SW AT **ST** POSITION (A/T)
POINTS CLOSED WITH CLUTCH START SW ON AND IGNITION SW AT **ST** POSITION (M/T)

○ : PARTS LOCATION

CODE	SEE PAGE	CODE	SEE PAGE	CODE	SEE PAGE
C 1	24	**I 3** B	25	**J 2**	29
C 2	24	**I 6**	25	**N 1**	25 (2JZ–GTE)
C 3	24	**I 7**	25	**P 2**	25 (2JZ–GTE)
C 9	28	**I 8**	25	**S 2** A	25 (2JZ–GTE)
D 1	24 (2JZ–GTE)	**I 9**	25	**S 3** B	25 (2JZ–GTE)
E 9 B	29	**I10**	25	**T13**	29
E10 A	29	**I11**	25		
I 2 A	25	**I19**	29		

⬭ : RELAY BLOCKS

CODE	SEE PAGE	RELAY BLOCKS (RELAY BLOCK LOCATION)
2	22	R/B NO. 2 (ENGINE COMPARTMENT LEFT)

⬭ : JUNCTION BLOCK AND WIRE HARNESS CONNECTOR

CODE	SEE PAGE	JUNCTION BLOCK AND WIRE HARNESS (CONNECTOR LOCATION)
1B	20	ENGINE ROOM MAIN WIRE AND J/B NO. 1 (LEFT KICK PANEL)
1J	20	COWL WIRE AND J/B NO. 1 (LEFT KICK PANEL)
1K		
2A	22	BATTERY AND J/B NO. 2 (ENGINE COMPARTMENT LEFT)

▭ : CONNECTOR JOINING WIRE HARNESS AND WIRE HARNESS

CODE	SEE PAGE	JOINING WIRE HARNESS AND WIRE HARNESS (CONNECTOR LOCATION)
EA1	32 (2JZ–GTE)	ENGINE WIRE AND ENGINE ROOM MAIN WIRE (NEAR THE R/B NO. 2)
EA2	32	
IB1	36	ENGINE ROOM MAIN WIRE AND COWL WIRE (LEFT KICK PANEL)
IB3		
IF2	36	INSTRUMENT PANEL WIRE AND COWL WIRE (INSTRUMENT PANEL REINFORCEMENT LH)
II1	38	ENGINE WIRE AND INSTRUMENT PANEL WIRE (RIGHT KICK PANEL)
IJ1	38	ENGINE WIRE AND COWL WIRE (RIGHT KICK PANEL)
IJ2		

▽ : GROUND POINTS

CODE	SEE PAGE	GROUND POINTS LOCATION
EC	32 (2JZ–GTE)	FRONT SIDE OF INTAKE MANIFOLD
ED	32 (2JZ–GTE)	REAR SIDE OF INTAKE MANIFOLD

⬡ : SPLICE POINTS

CODE	SEE PAGE	WIRE HARNESS WITH SPLICE POINTS	CODE	SEE PAGE	WIRE HARNESS WITH SPLICE POINTS
E11	32	ENGINE WIRE	**I 4**	38	COWL WIRE
E13			**I17**	38	ENGINE WIRE
E16					

C 1 BLACK



C 2 BLACK



C 3 DARK GRAY



C 9

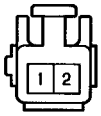

D 1 BLACK

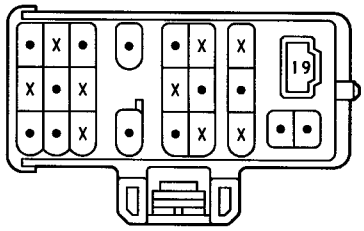

E 9 (B) DARK GRAY

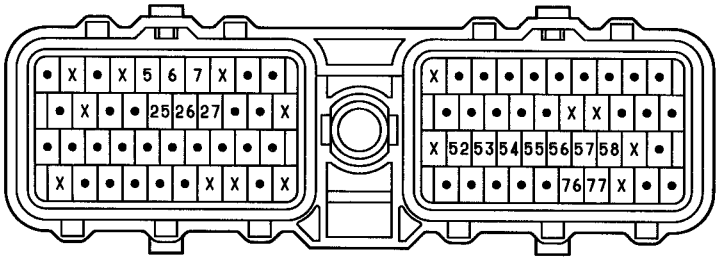

E10 (A) DARK GRAY

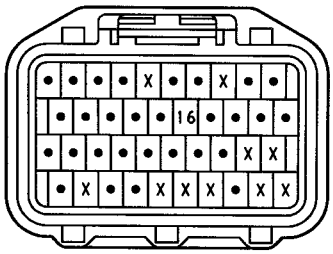

I 2 (A) BLACK



I 3 (B) BLACK

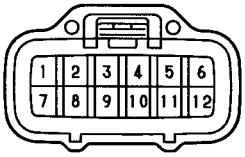

I 6, I 7, I 8
I 9, I10, I11 BLACK

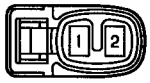

I19

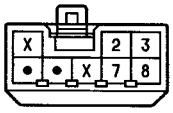

J 2

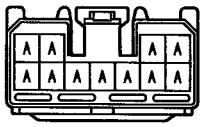

(HINT:SEE PAGE 7)

N 1 GRAY



P 2 GRAY

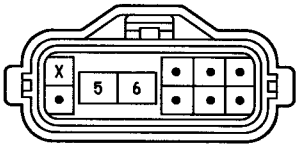

S 2 (A)

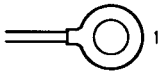

S 3 (B) BLACK



T13 ORANGE

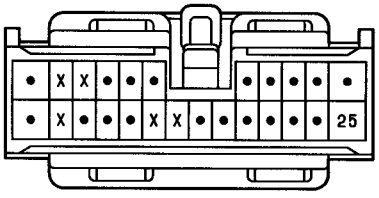

STARTING AND IGNITION (FOR 2JZ–GE)

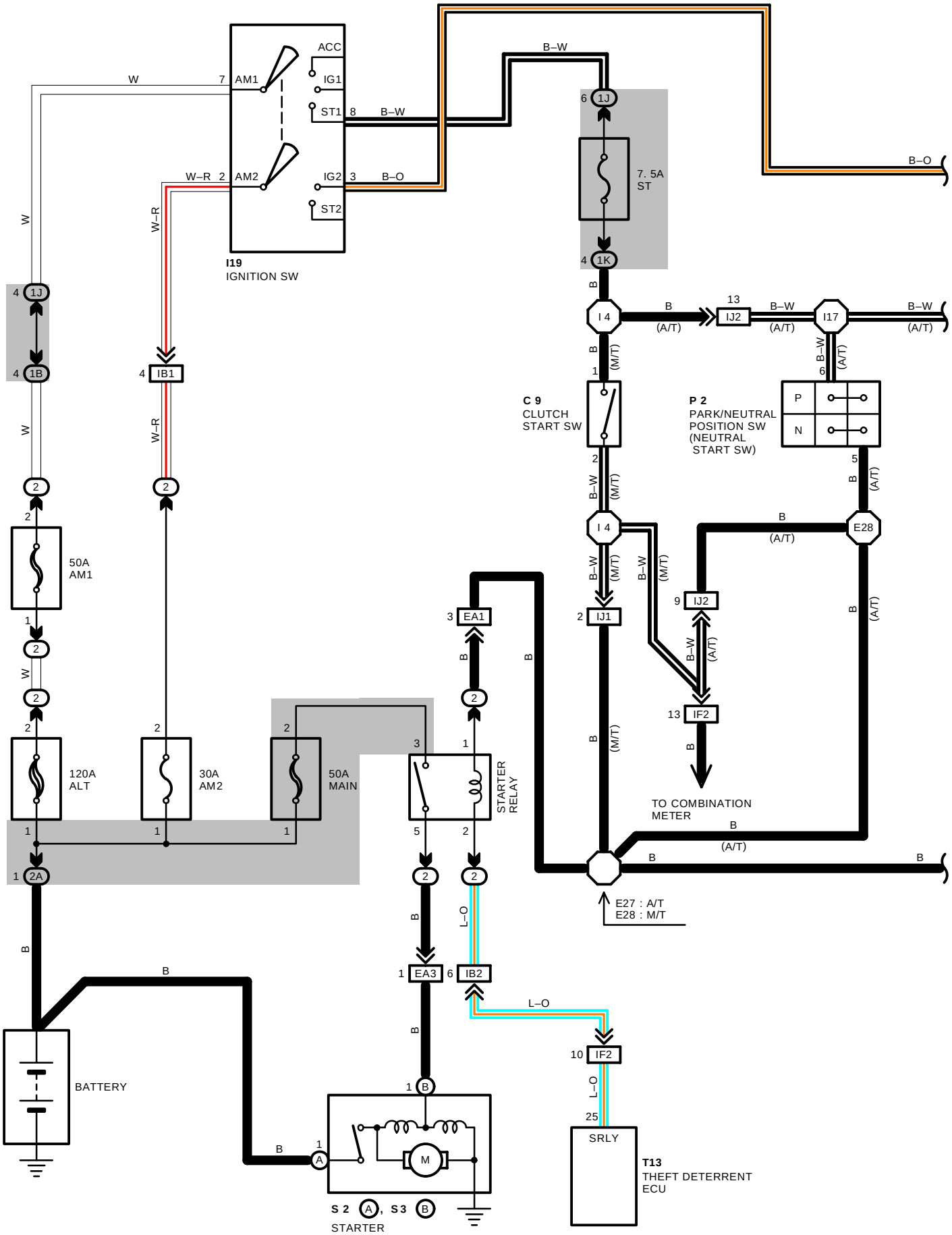

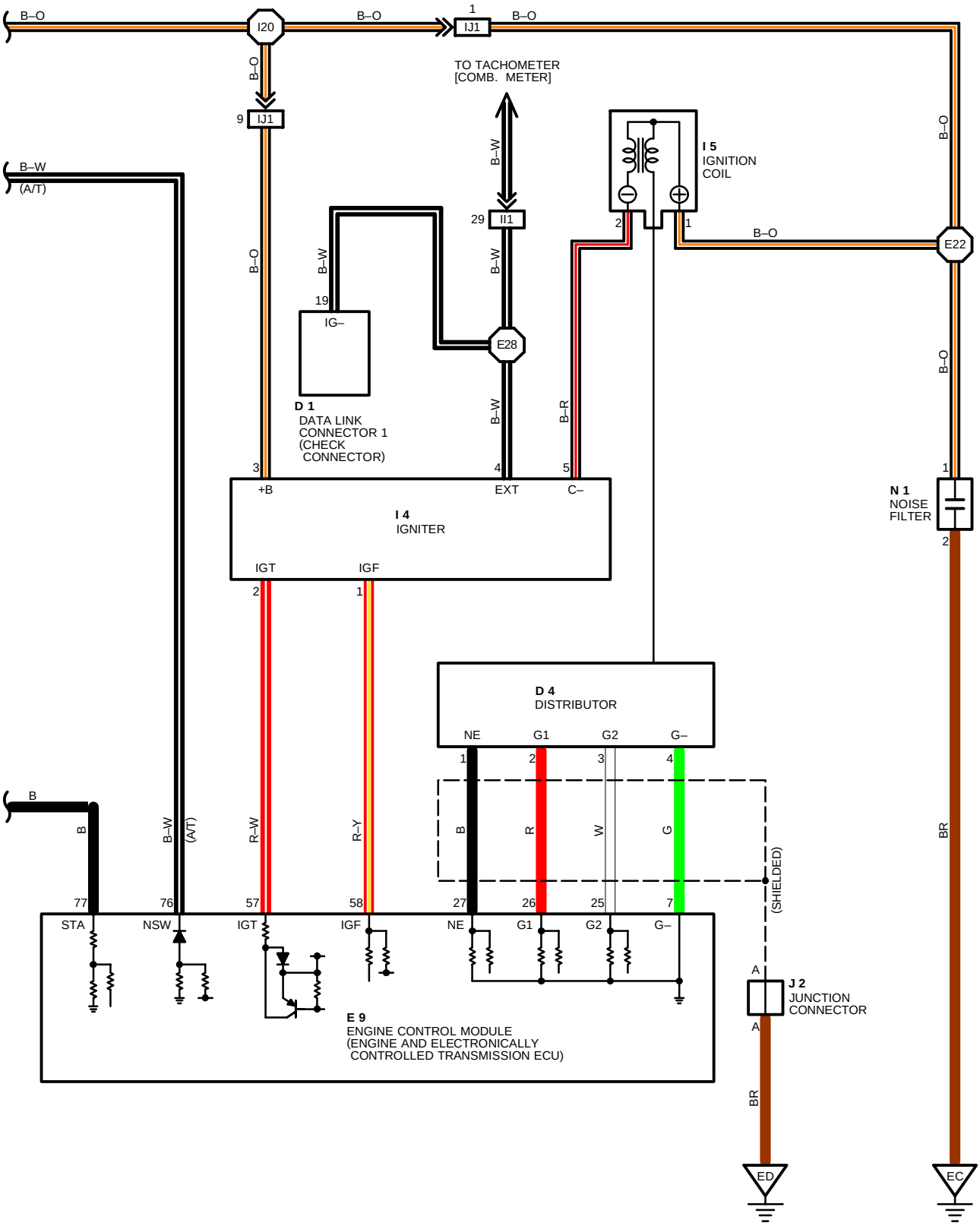
B–O
I20
B–O
1
IJ1
B–O
TO TACHOMETER
[COMB. METER]
B–O
9
IJ1
B–W
(A/T)
B–W
29
II1
I 5
IGNITION
COIL
B–O
B–O
B–W
B–W
19
IG–
E28
2
1
B–O
E22
B–O
D 1
DATA LINK
CONNECTOR 1
(CHECK
CONNECTOR)
B–W
B–R
3
4
5
1
+B
EXT
C–
I 4
IGNITER
N 1
NOISE
FILTER
2
IGT
IGF
2
1
D 4
DISTRIBUTOR
NE
G1
G2
G–
1
2
3
4
B
R
W
G
(SHIELDED)
B
B
B–W
(A/T)
R–W
R–Y
BR
77
76
57
58
27
26
25
7
STA
NSW
IGT
IGF
NE
G1
G2
G–
A
J 2
JUNCTION
CONNECTOR
A
BR
E 9
ENGINE CONTROL MODULE
(ENGINE AND ELECTRONICALLY
CONTROLLED TRANSMISSION ECU)
ED
EC

STARTING AND IGNITION (FOR 2JZ–GE)

SERVICE HINTS

I19 IGNITION SW
7–8 : CLOSED WITH IGNITION SW AT **ST** POSITION
2–3 : CLOSED WITH IGNITION SW AT **ON** OR **ST** POSITION

P 2 PARK/NEUTRAL POSITION SW (NEUTRAL START SW) (A/T)
6–5 : CLOSED WITH A/T SHIFT LEVER IN **P** OR **N** POSITION

C 9 CLUTCH START SW
1–2 : CLOSED WITH CLUTCH PEDAL FULLY DEPRESSED

S 2(A), S 3(B) STARTER
POINTS CLOSED WITH PARK/NEUTRAL POSITION SW (NEUTRAL START SW) ON AND IGNITION SW AT **ST** POSITION (A/T)
POINTS CLOSED WITH CLUTCH START SW ON AND IGNITION SW AT **ST** POSITION (M/T)

: PARTS LOCATION

CODE	SEE PAGE	CODE	SEE PAGE	CODE		SEE PAGE
C 9	28	**I 5**	27	**S 2**	A	27 (2JZ–GE)
D 1	26 (2JZ–GE)	**I19**	29	**S 3**	B	27 (2JZ–GE)
D 4	26	**J 2**	29	**T13**		29
E 9	29	**N 1**	27 (2JZ–GE)			
I 4	27	**P 2**	27 (2JZ–GE)			

: RELAY BLOCKS

CODE	SEE PAGE	RELAY BLOCKS (RELAY BLOCK LOCATION)
2	22	R/B NO. 2 (ENGINE COMPARTMENT LEFT)

: JUNCTION BLOCK AND WIRE HARNESS CONNECTOR

CODE	SEE PAGE	JUNCTION BLOCK AND WIRE HARNESS (CONNECTOR LOCATION)
1B	20	ENGINE ROOM MAIN WIRE AND J/B NO. 1 (LEFT KICK PANEL)
1J	20	COWL WIRE AND J/B NO. 1 (LEFT KICK PANEL)
1K		
2A	22	BATTERY AND J/B NO. 2 (ENGINE COMPARTMENT LEFT)

: CONNECTOR JOINING WIRE HARNESS AND WIRE HARNESS

CODE	SEE PAGE	JOINING WIRE HARNESS AND WIRE HARNESS (CONNECTOR LOCATION)
EA1	34 (2JZ–GE)	ENGINE WIRE AND ENGINE ROOM MAIN WIRE (NEAR THE R/B NO. 2)
EA3	34	
IB1	36	ENGINE ROOM MAIN WIRE AND COWL WIRE (LEFT KICK PANEL)
IB2		
IF2	36	INSTRUMENT PANEL WIRE AND COWL WIRE (INSTRUMENT PANEL REINFORCEMENT LH)
II1	38	ENGINE WIRE AND INSTRUMENT PANEL WIRE (RIGHT KICK PANEL)
IJ1	38	ENGINE WIRE AND COWL WIRE (RIGHT KICK PANEL)
IJ2		

: GROUND POINTS

CODE	SEE PAGE	GROUND POINTS LOCATION
EC	34 (2JZ–GE)	FRONT SIDE OF INTAKE MANIFOLD
ED	34 (2JZ–GE)	REAR SIDE OF INTAKE MANIFOLD

: SPLICE POINTS

CODE	SEE PAGE	WIRE HARNESS WITH SPLICE POINTS	CODE	SEE PAGE	WIRE HARNESS WITH SPLICE POINTS
E22	34	ENGINE WIRE	**I 4**	38	COWL WIRE
E27			**I17**	38	ENGINE WIRE
E28			**I20**	38	COWL WIRE

C 9

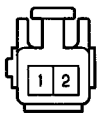

D 1 BLACK

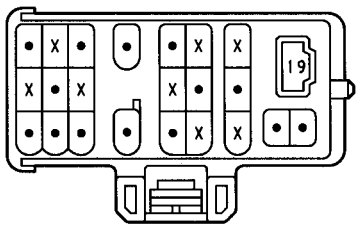

D 4 BLACK



E 9 DARK GRAY

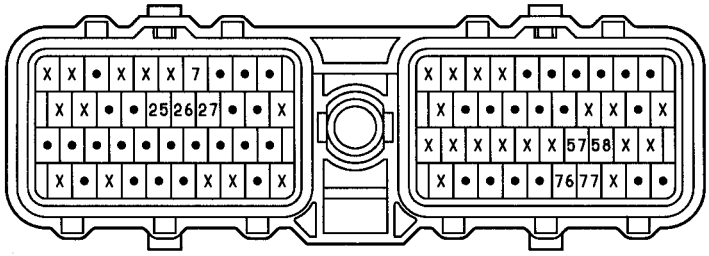

I 4 BLACK

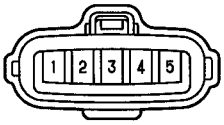

I 5 BLACK

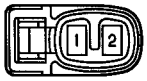

I19

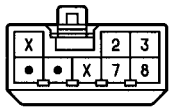

J 2

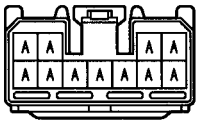

(HINT:SEE PAGE 7)

N 1 GRAY

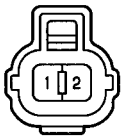

P 2 GRAY

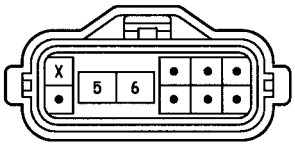

S 2 (A)

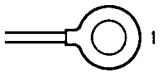

S 3 (B) BLACK



T13 ORANGE

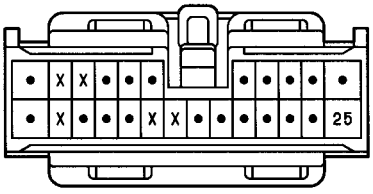

*1 : 2JZ–GTE
*2 : 2JZ–GE

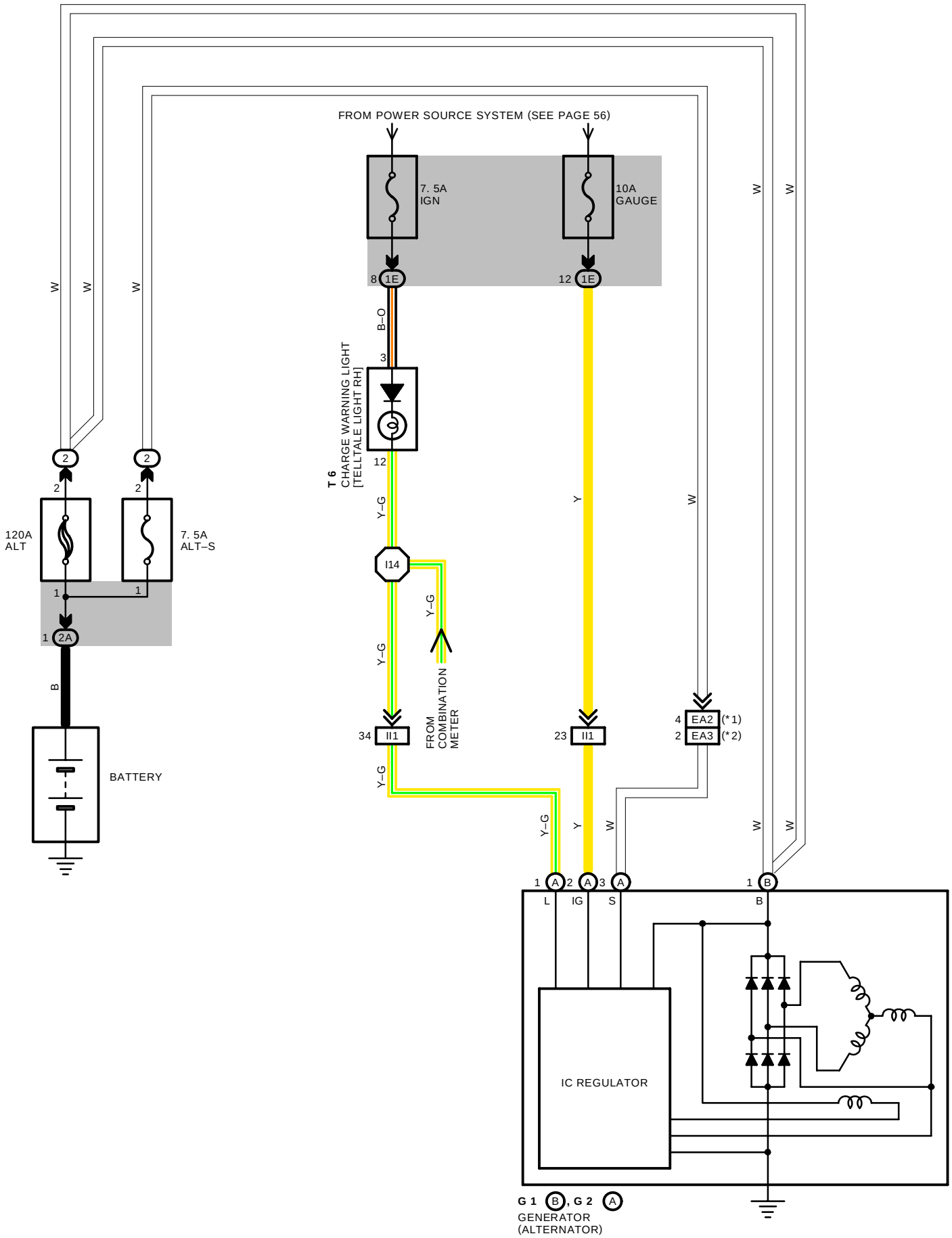

SERVICE HINTS

G 2(A) GENERATOR (ALTERNATOR)

(A) 3–GROUND: **13.9–15.1** VOLTS WITH ENGINE RUNNING AT **2000** RPM AND **25**˚C (**77**˚F)
13.5–14.3 VOLTS WITH ENGINE RUNNING AT **5000** RPM AND **115**˚C (**239**˚F)
(A) 1–GROUND: **0–4** VOLTS WITH IGNITION SW AT **ON** POSITION AND ENGINE NOT RUNNING

: PARTS LOCATION

CODE		SEE PAGE	CODE		SEE PAGE	CODE	SEE PAGE
G 1	B	24 (2JZ–GTE)	**G 2**	A	24 (2JZ–GTE)	**T 6**	29
		26 (2JZ–GE)			26 (2JZ–GE)		

: RELAY BLOCKS

CODE	SEE PAGE	RELAY BLOCKS (RELAY BLOCK LOCATION)
2	22	R/B NO. 2 (ENGINE COMPARTMENT LEFT)

: JUNCTION BLOCK AND WIRE HARNESS CONNECTOR

CODE	SEE PAGE	JUNCTION BLOCK AND WIRE HARNESS (CONNECTOR LOCATION)
1E	20	INSTRUMENT PANEL WIRE AND J/B NO. 1 (LEFT KICK PANEL)
2A	22	BATTERY AND J/B NO. 2 (ENGINE COMPARTMENT LEFT)

: CONNECTOR JOINING WIRE HARNESS AND WIRE HARNESS

CODE	SEE PAGE	JOINING WIRE HARNESS AND WIRE HARNESS (CONNECTOR LOCATION)
EA2	32	ENGINE WIRE AND ENGINE ROOM MAIN WIRE (NEAR THE R/B NO. 2)
EA3	34	
II1	38	ENGINE WIRE AND INSTRUMENT PANEL WIRE (RIGHT KICK PANEL)

: SPLICE POINTS

CODE	SEE PAGE	WIRE HARNESS WITH SPLICE POINTS	CODE	SEE PAGE	WIRE HARNESS WITH SPLICE POINTS
I14	38	INSTRUMENT PANEL WIRE			

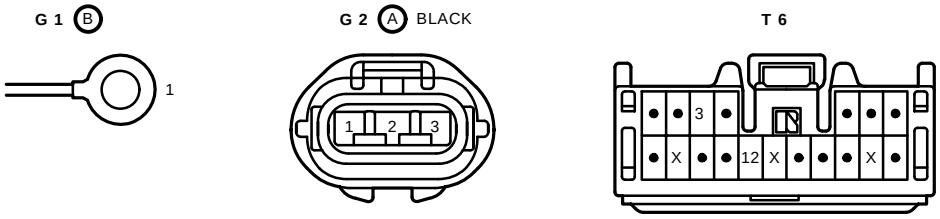

ENGINE CONTROL (FOR 2JZ–GTE)

SYSTEM OUTLINE

THE ENGINE CONTROL SYSTEM UTILIZES A MICROCOMPUTER AND MAINTAINS OVERALL CONTROL OF THE ENGINE, TRANSMISSION ETC. AN OUTLINE OF THE ENGINE CONTROL IS GIVEN HERE.

1. INPUT SIGNALS

(1) ENGINE COOLANT TEMP. (WATER TEMP.) SIGNAL CIRCUIT

THE ENGINE COOLANT TEMP. SENSOR (EFI WATER TEMP. SENSOR) DETECTS THE ENGINE COOLANT TEMP. (WATER TEMP.) AND HAS A BUILT–IN THERMISTOR WITH A RESISTANCE, WHICH VARIES ACCORDING TO THE ENGINE COOLANT TEMP. (WATER TEMP.) WHICH IS INPUT INTO **TERMINAL THW** OF THE ENGINE CONTROL MODULE (ENGINE AND ELECTRONICALLY CONTROLLED TRANSMISSION ECU) AS A CONTROL SIGNAL.

(2) INTAKE AIR TEMP. SIGNAL CIRCUIT

THE INTAKE AIR TEMP. SENSOR IS INSTALLED IN THE MASS AIR FLOW (AIR FLOW METER) AND DETECTS THE INTAKE AIR TEMP. WHICH IS INPUT AS A CONTROL SIGNAL TO **TERMINAL THA** OF THE ENGINE CONTROL MODULE (ENGINE AND ELECTRONICALLY CONTROLLED TRANSMISSION ECU).

(3) OXYGEN DENSITY SIGNAL CIRCUIT

THE OXYGEN DENSITY IN THE EXHAUST EMISSION IS DETECTED BY THE HEATED OXYGEN SENSORS SIDE AND INPUT AS A CONTROL SIGNAL TO **TERMINALS OX1, OX2** OF THE ENGINE CONTROL MODULE (ENGINE AND ELECTRONICALLY CONTROLLED TRANSMISSION ECU).

(4) RPM SIGNAL CIRCUIT

CRANKSHAFT POSITION IS DETECTED BY THE CRANKSHAFT POSITION SENSOR. CRANKSHAFT POSITION IS INPUT AS A CONTROL SIGNAL TO **TERMINAL NE** OF THE ENGINE CONTROL MODULE (ENGINE AND ELECTRONICALLY CONTROLLED TRANSMISSION ECU).

(5) THROTTLE POSITION SIGNAL CIRCUIT

THE THROTTLE POSITION SENSOR DETECTS THE THROTTLE VALVE OPENING ANGLE AS A CONTROL SIGNAL, WHICH IS INPUT INTO **TERMINAL VTA1** OF THE ENGINE CONTROL MODULE (ENGINE AND ELECTRONICALLY CONTROLLED TRANSMISSION ECU). WHEN THE VALVE IS COMPLETELY CLOSED, THE CONTROL SIGNAL IS INPUT INTO **TERMINAL IDL1**.

(6) VEHICLE SPEED CIRCUIT

THE VEHICLE SPEED IS DETECTED BY VEHICLE SPEED SENSOR (SPEED SENSOR) NO.1 INSTALLED IN THE TRANSMISSION AND THE SIGNAL IS INPUT TO **TERMINAL SP1** OF THE ENGINE CONTROL MODULE (ENGINE AND ELECTRONICALLY CONTROLLED TRANSMISSION ECU) VIA THE COMBINATION METER.

(7) NEUTRAL POSITION SIGNAL CIRCUIT

THE PARK/NEUTRAL POSITION SW (NEUTRAL START SW) DETECTS WHETHER THE SHIFT POSITION IS IN “N” AND “P” OR NOT, AND THE SIGNAL IS INPUT INTO **TERMINAL NSW** OF THE ENGINE CONTROL MODULE (ENGINE AND ELECTRONICALLY CONTROLLED TRANSMISSION ECU).

(8) A/C SW SIGNAL CIRCUIT

THE OPERATING VOLTAGE OF THE A/C MAGNETIC CLUTCH IS DETECTED AND THE SIGNAL IS INPUT INTO **TERMINAL ACMG** OF ENGINE CONTROL MODULE (ENGINE AND ELECTRONICALLY CONTROLLED TRANSMISSION ECU) AS A CONTROL SIGNAL.

(9) BATTERY SIGNAL CIRCUIT

VOLTAGE IS CONSTANTLY APPLIED TO **TERMINAL BATT** OF THE ENGINE CONTROL MODULE. (ENGINE AND ELECTRONICALLY CONTROLLED TRANSMISSION ECU). WITH THE IGNITION SW TURNED ON, THE VOLTAGE FOR ENGINE CONTROL MODULE (ENGINE AND ELECTRONICALLY CONTROLLED TRANSMISSION ECU) START–UP POWER SUPPLY IS APPLIED TO **TERMINAL +B** OF THE ENGINE CONTROL MODULE (ENGINE AND ELECTRONICALLY CONTROLLED TRANSMISSION ECU) VIA EFI MAIN RELAY.

THE CURRENT FLOWING THROUGH THE **IGN** FUSE FLOWS TO **TERMINAL IGSW** OF THE ENGINE CONTROL MODULE (ENGINE AND ELECTRONICALLY CONTROLLED TRANSMISSION ECU).

(10) INTAKE AIR VOLUME SIGNAL CIRCUIT

INTAKE AIR VOLUME IS DETECTED BY THE MASS AIR FLOW (AIR FLOW METER) AND THE SIGNAL IS INPUT TO **TERMINAL VG** OF THE ENGINE CONTROL MODULE (ENGINE AND ELECTRONICALLY CONTROLLED TRANSMISSION ECU) AS A CONTROL SIGNAL.

(11) STOP LIGHT SW SIGNAL CIRCUIT

THE STOP LIGHT SW IS USED TO DETECT WHETHER THE VEHICLE IS BRAKING OR NOT AND THE SIGNAL IS INPUT INTO **TERMINAL STP** OF THE ENGINE CONTROL MODULE (ENGINE AND ELECTRONICALLY CONTROLLED TRANSMISSION ECU) AS A CONTROL SIGNAL.

(12) STARTER SIGNAL CIRCUIT

TO CONFIRM WHETHER THE ENGINE IS CRANKING, THE VOLTAGE IS APPLIED TO THE STARTER MOTOR DURING CRANKING IS DETECTED AND THE SIGNAL IS INPUT INTO **TERMINAL STA** OF THE ENGINE CONTROL MODULE (ENGINE AND ELECTRONICALLY CONTROLLED TRANSMISSION ECU) AS A CONTROL SIGNAL.

(13) ENGINE KNOCK SIGNAL CIRCUIT

ENGINE KNOCKING IS DETECTED BY KNOCK SENSOR FRONT AND REAR SIDE AND THE SIGNAL IS INPUT INTO **TERMINALS KNK1** AND **KNK2** AS A CONTROL SIGNAL.

2. CONTROL SYSTEM

* SEQUENTIAL MULTIPORT FUEL INJECTION (ELECTRONIC FUEL INJECTION) SYSTEM

  THE SEQUENTIAL MULTIPORT FUEL INJECTION (ELECTRONIC FUEL INJECTION) SYSTEM MONITORS THE ENGINE CONDITION THROUGH THE SIGNALS INPUT FROM EACH SENSOR (INPUT SIGNALS FROM (1) TO (13) ETC.) TO THE ENGINE CONTROL MODULE (ENGINE AND ELECTRONICALLY CONTROLLED TRANSMISSION ECU). THE BEST FUEL INJECTION TIMING IS DECIDED BASED ON THIS DATA AND THE PROGRAM MEMORIZED BY THE ENGINE CONTROL MODULE (ENGINE AND ELECTRONICALLY CONTROLLED TRANSMISSION ECU), AND THE CONTROL SIGNAL IS OUTPUT TO **TERMINALS #10, #20, #30, 40, #50** AND **#60** OF THE ENGINE CONTROL MODULE (ENGINE AND ELECTRONICALLY CONTROLLED TRANSMISSION ECU) TO OPERATE THE INJECTOR (INJECT THE FUEL). THE SEQUENTIAL MULTIPORT FUEL INJECTION (ELECTRONIC FUEL INJECTION) SYSTEM PRODUCES CONTROLS OF FUEL INJECTION OPERATION BY THE ENGINE CONTROL MODULE (ENGINE AND ELECTRONICALLY CONTROLLED TRANSMISSION ECU) IN RESPONSE TO THE DRIVING CONDITIONS.

* ESA (ELECTRONIC SPARK ADVANCE) SYSTEM

  THE ESA SYSTEM MONITORS THE ENGINE CONDITION THROUGH THE SIGNALS INPUT TO THE ENGINE CONTROL MODULE (ENGINE AND ELECTRONICALLY CONTROLLED TRANSMISSION ECU) FROM EACH SENSOR (INPUT SIGNALS FROM (1), (2), (4) TO (13) ETC.). THE BEST IGNITION TIMING IS DECIDED ACCORDING TO THIS DATA AND THE MEMORIZED DATA IN THE ENGINE CONTROL MODULE (ENGINE AND ELECTRONICALLY CONTROLLED TRANSMISSION ECU) AND THE CONTROL SIGNAL IS OUTPUT TO **TERMINALS IGT1**, **IGT2, IGT3**, **IGT4**, **IGT5** AND **IGT6** THESE SIGNALS CONTROL THE IGNITER TO PROVIDE THE BEST IGNITION TIMING FOR THE DRIVING CONDITIONS.

* HEATED OXYGEN SENSOR HEATER CONTROL SYSTEM

  THE MAIN HEATED OXYGEN SENSOR, SUB HEATED OXYGEN SENSOR HEATER CONTROL SYSTEM TURNS THE HEATER ON WHEN THE INTAKE AIR VOLUME IS LOW (TEMP. OF EXHAUST EMISSIONS IS LOW), AND WARMS UP THE OXYGEN SENSOR TO IMPROVE DETECTION PERFORMANCE OF THE SENSOR. THE ENGINE CONTROL MODULE (ENGINE AND ELECTRONICALLY CONTROLLED TRANSMISSION ECU) EVALUATES THE SIGNALS FROM EACH SENSOR (INPUT SIGNALS FROM (1), (2), (4), (9) TO (11) ETC.), AND OUTPUTS CURRENT TO **TERMINALS HT1**, **HT2** TO CONTROL THE HEATER.

* IDLE AIR CONTROL (IDLE SPEED CONTROL) SYSTEM

  THE IDLE AIR CONTROL (ISC) SYSTEM (STEP MOTOR TYPE) INCREASES THE ENGINE SPEED AND PROVIDES IDLING STABILITY FOR FAST IDLE–UP WHEN THE ENGINE IS COLD, AND WHEN THE IDLE SPEED HAS DROPPED DUE TO ELECTRICAL LOAD AND SO ON. THE ENGINE CONTROL MODULE (ENGINE AND ELECTRONICALLY CONTROLLED TRANSMISSION ECU) EVALUATE THE SIGNALS FROM EACH SENSOR (INPUT SIGNALS FROM (1), (4), (5), (8), (9), (11) ETC.), OUTPUTS CURRENT TO **TERMINALS ISC1, ISC2, ISC3** AND **ISC4** TO CONTROL THE IDLE AIR CONTROL VALVE (ISC VALVE).

* EGR CONTROL SYSTEM

  THE EGR CONTROL SYSTEM DETECTS THE SIGNAL FROM EACH SENSOR (INPUT SIGNALS FROM (1), (4), (9), (10) ETC.), AND OUTPUTS CURRENT TO **TERMINAL EGR** TO CONTROL THE EGR VALVE.

* FUEL PUMP CONTROL SYSTEM

  THE ENGINE CONTROL MODULE (ENGINE AND ELECTRONICALLY CONTROLLED TRANSMISSION ECU) OUTPUTS CURRENT TO **TERMINAL FPC** AND CONTROLS THE FUEL PUMP ECU AND FUEL PUMP DRIVE SPEED IN RESPONSE TO THE DRIVING CONDITIONS.

3. DIAGNOSIS SYSTEM

WITH THE DIAGNOSIS SYSTEM, WHEN THERE IS A MALFUNCTION IN THE ENGINE CONTROL MODULE (ENGINE AND ELECTRONICALLY CONTROLLED TRANSMISSION ECU) SIGNAL SYSTEM, THE MALFUNCTIONING SYSTEM IS RECORDED IN THE MEMORY. THE MALFUNCTIONING SYSTEM CAN BE FOUND BY READING THE CODE DISPLAYED BY THE MALFUNCTION INDICATOR LAMP (CHECK ENGINE WARNING LIGHT).

4. FAIL–SAFE SYSTEM

WHEN A MALFUNCTION HAS OCCURRED IN ANY SYSTEM, IF THERE IS A POSSIBILITY OF ENGINE TROUBLE BEING CAUSED BY CONTINUED CONTROL BASED ON THE SIGNALS FROM THAT SYSTEM, THE FAIL–SAFE SYSTEM EITHER CONTROLS THE SYSTEM BY USING DATA (STANDARD VALUES) RECORDED IN THE ENGINE CONTROL MODULE (ENGINE AND ELECTRONICALLY CONTROLLED TRANSMISSION ECU) MEMORY OR ELSE STOPS THE ENGINE.

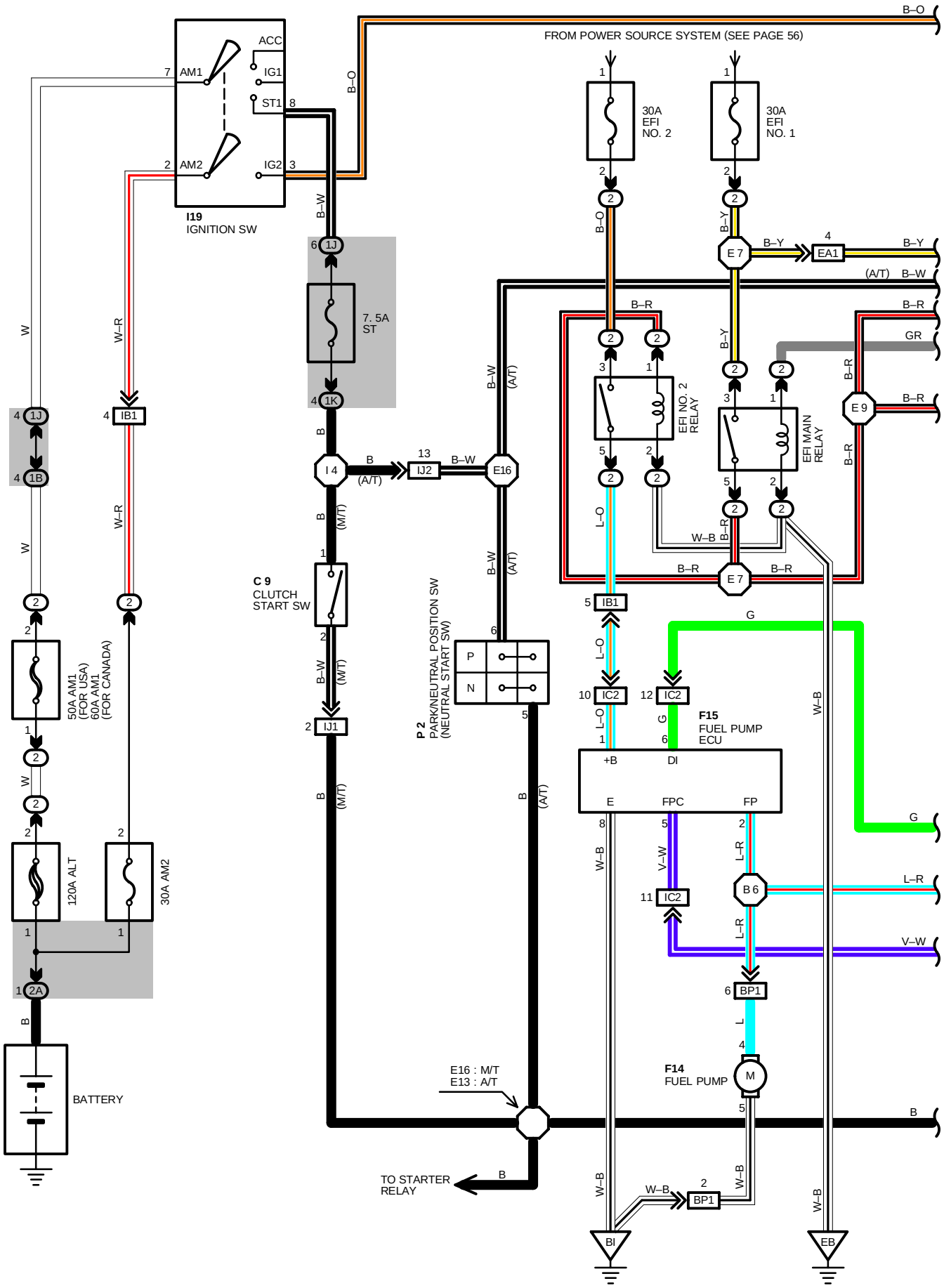
FROM POWER SOURCE SYSTEM (SEE PAGE 56)
B–O
I19
IGNITION SW
ACC
IG1
ST1
IG2
AM1
AM2
30A EFI NO. 2
30A EFI NO. 1
7. 5A ST
EFI NO. 2 RELAY
EFI MAIN RELAY
C 9
CLUTCH START SW
P 2
PARK/NEUTRAL POSITION SW (NEUTRAL START SW)
F15
FUEL PUMP ECU
F14
FUEL PUMP
50A AM1 (FOR USA)
60A AM1 (FOR CANADA)
120A ALT
30A AM2
BATTERY
E16 : M/T
E13 : A/T
TO STARTER RELAY
(A/T)
(M/T)
BI
EB

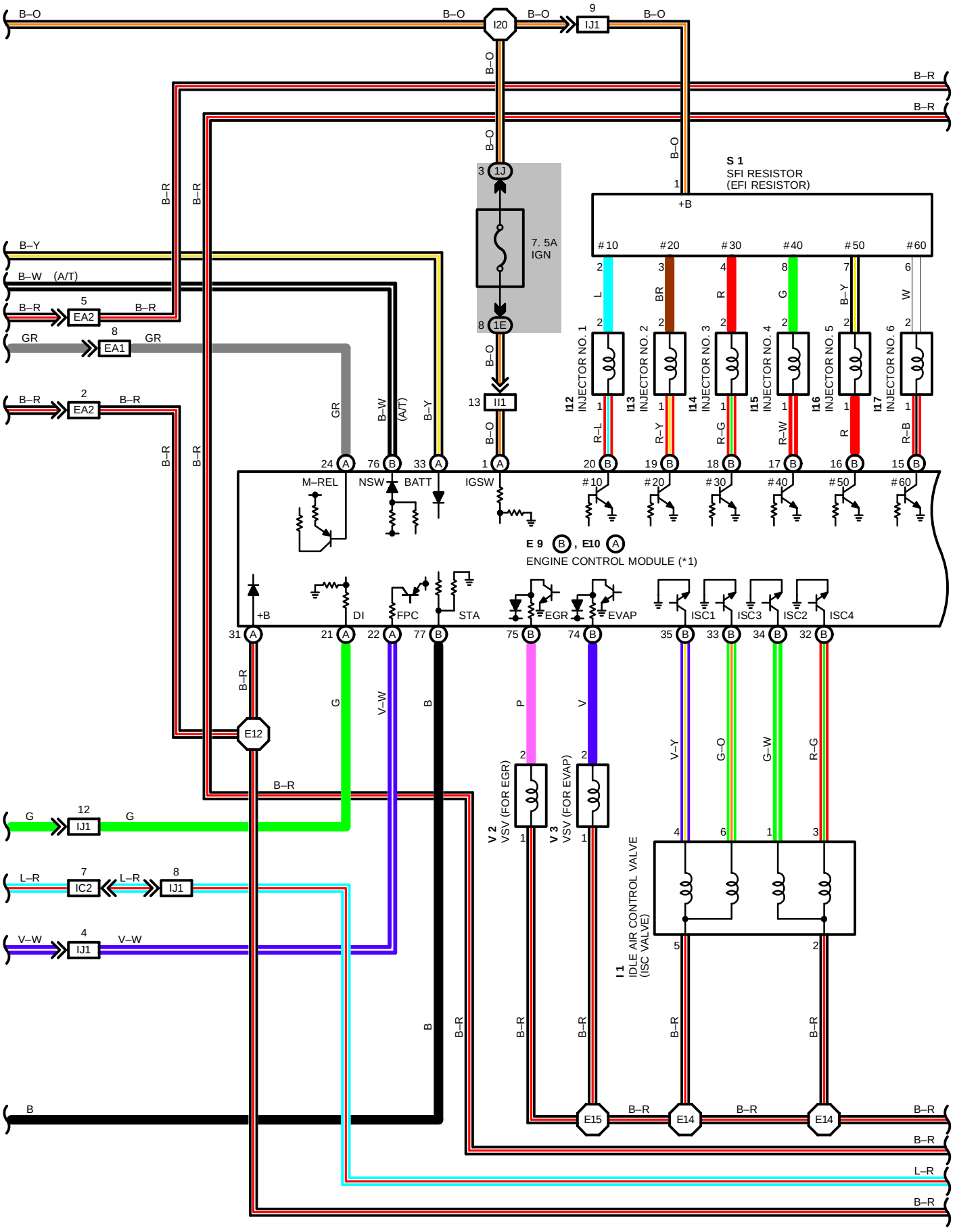
S 1
SFI RESISTOR
(EFI RESISTOR)
+B
7. 5A
IGN
#10
#20
#30
#40
#50
#60
I12 INJECTOR NO. 1
I13 INJECTOR NO. 2
I14 INJECTOR NO. 3
I15 INJECTOR NO. 4
I16 INJECTOR NO. 5
I17 INJECTOR NO. 6
M–REL
NSW
BATT
IGSW
E 9 , E10
ENGINE CONTROL MODULE (*1)
+B
DI
FPC
STA
EGR
EVAP
ISC1
ISC3
ISC2
ISC4
V 2 VSV (FOR EGR)
V 3 VSV (FOR EVAP)
I 1 IDLE AIR CONTROL VALVE (ISC VALVE)
I20
IJ1
1J
1E
II1
EA2
EA1
IC2
E12
E15
E14

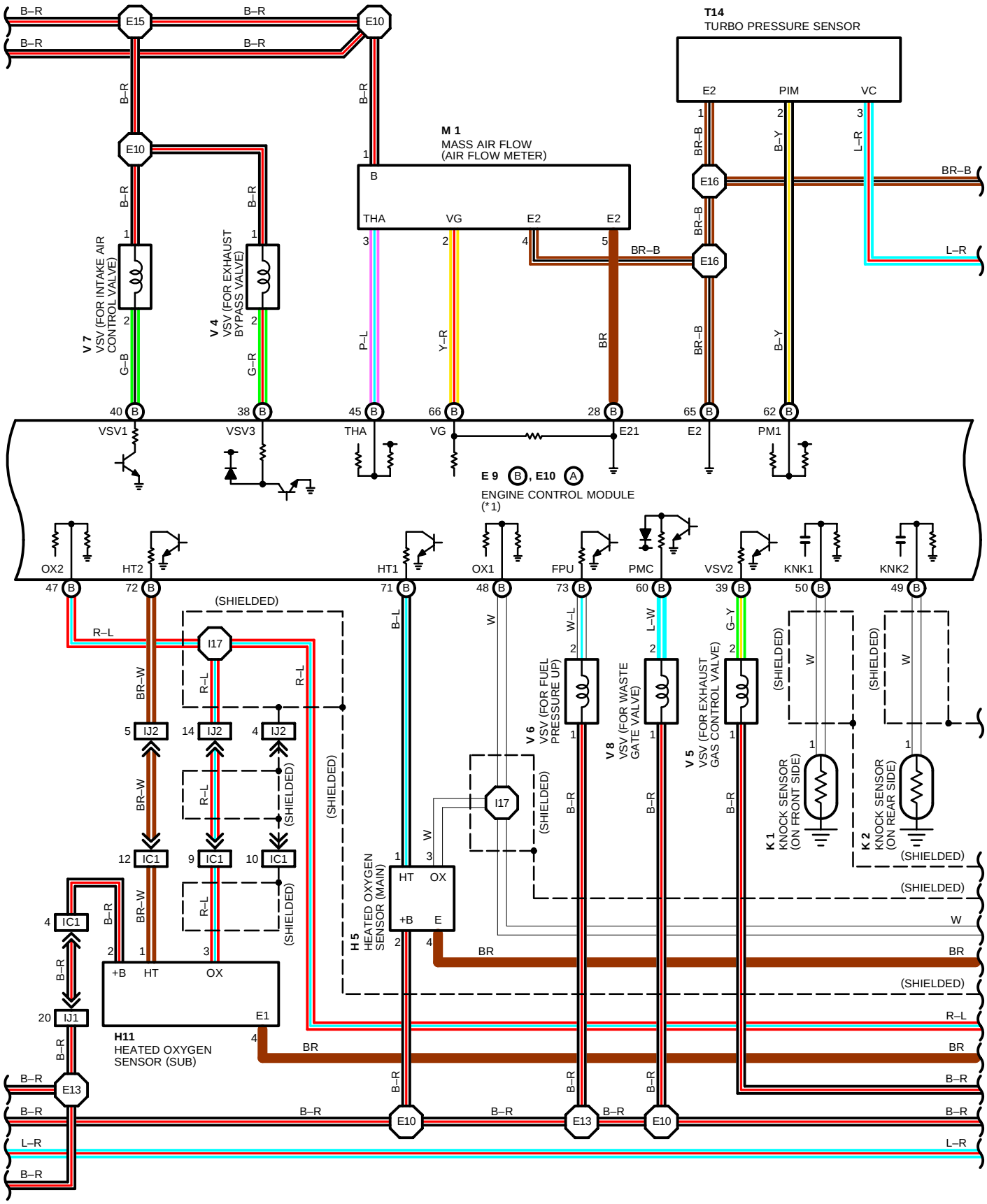
T14
TURBO PRESSURE SENSOR
E2
PIM
VC
M 1
MASS AIR FLOW
(AIR FLOW METER)
THA
VG
E2
E2
V 7
VSV (FOR INTAKE AIR CONTROL VALVE)
V 4
VSV (FOR EXHAUST BYPASS VALVE)
VSV1
VSV3
THA
VG
E21
E2
PM1
E 9 B, E10 A
ENGINE CONTROL MODULE
(*1)
OX2
HT2
HT1
OX1
FPU
PMC
VSV2
KNK1
KNK2
(SHIELDED)
V 6
VSV (FOR FUEL PRESSURE UP)
V 8
VSV (FOR WASTE GATE VALVE)
V 5
VSV (FOR EXHAUST GAS CONTROL VALVE)
K 1
KNOCK SENSOR (ON FRONT SIDE)
K 2
KNOCK SENSOR (ON REAR SIDE)
H 5
HEATED OXYGEN SENSOR (MAIN)
H11
HEATED OXYGEN SENSOR (SUB)
+B
HT
OX
E1
B–R
BR–W
R–L
P–L
Y–R
BR
BR–B
B–Y
L–R
W
W–L
L–W
G–Y
G–B
G–R
B–L

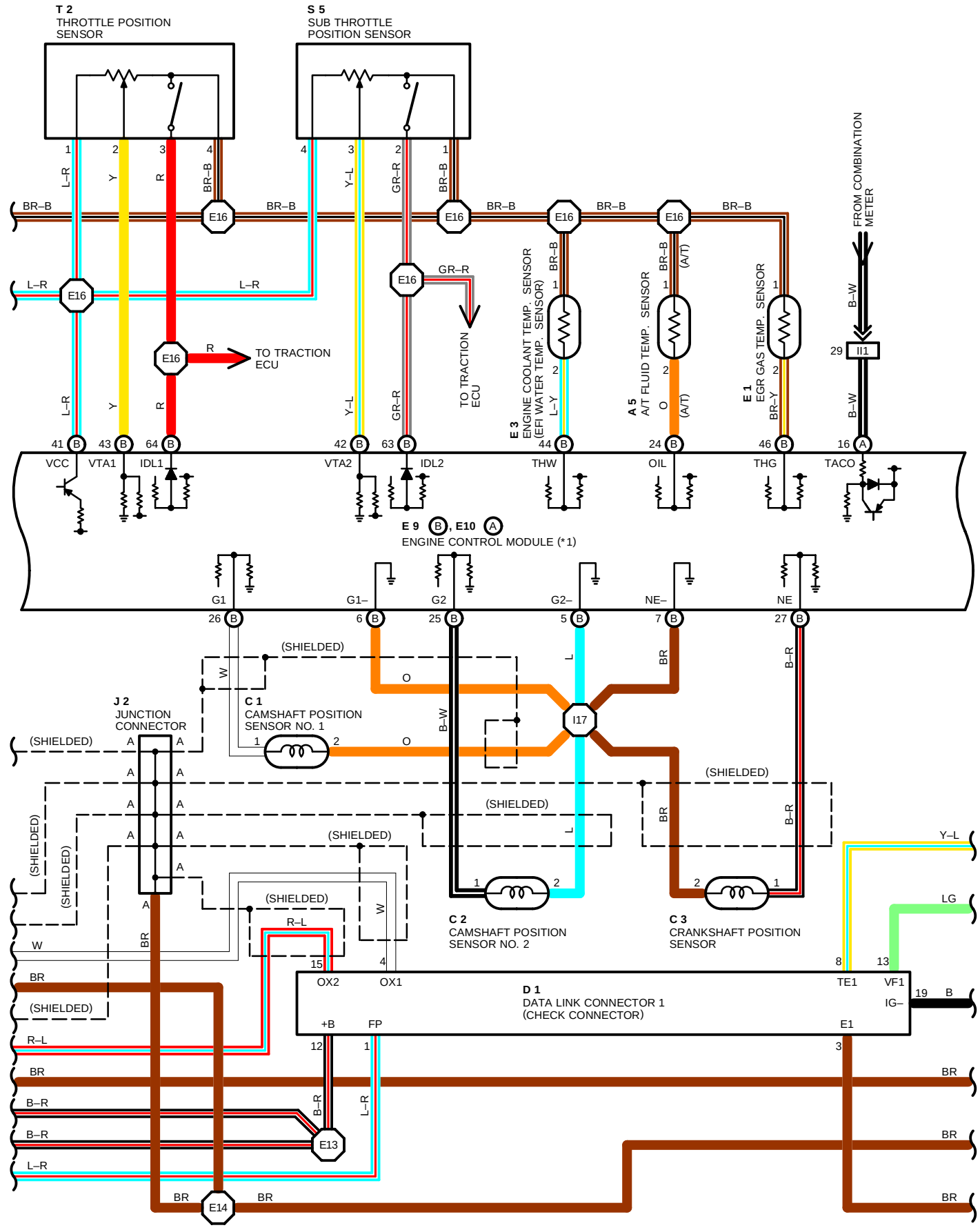
T 2
THROTTLE POSITION SENSOR
S 5
SUB THROTTLE POSITION SENSOR
FROM COMBINATION METER
TO TRACTION ECU
TO TRACTION ECU
E 3
ENGINE COOLANT TEMP. SENSOR (EFI WATER TEMP. SENSOR)
A 5
A/T FLUID TEMP. SENSOR
E 1
EGR GAS TEMP. SENSOR
VCC
VTA1
IDL1
VTA2
IDL2
THW
OIL
THG
TACO
E 9 B, E10 A
ENGINE CONTROL MODULE (*1)
G1
G1–
G2
G2–
NE–
NE
J 2
JUNCTION CONNECTOR
C 1
CAMSHAFT POSITION SENSOR NO. 1
C 2
CAMSHAFT POSITION SENSOR NO. 2
C 3
CRANKSHAFT POSITION SENSOR
D 1
DATA LINK CONNECTOR 1 (CHECK CONNECTOR)
OX2
OX1
+B
FP
TE1
VF1
IG–
E1
(SHIELDED)
E16
E13
E14
I17
I11

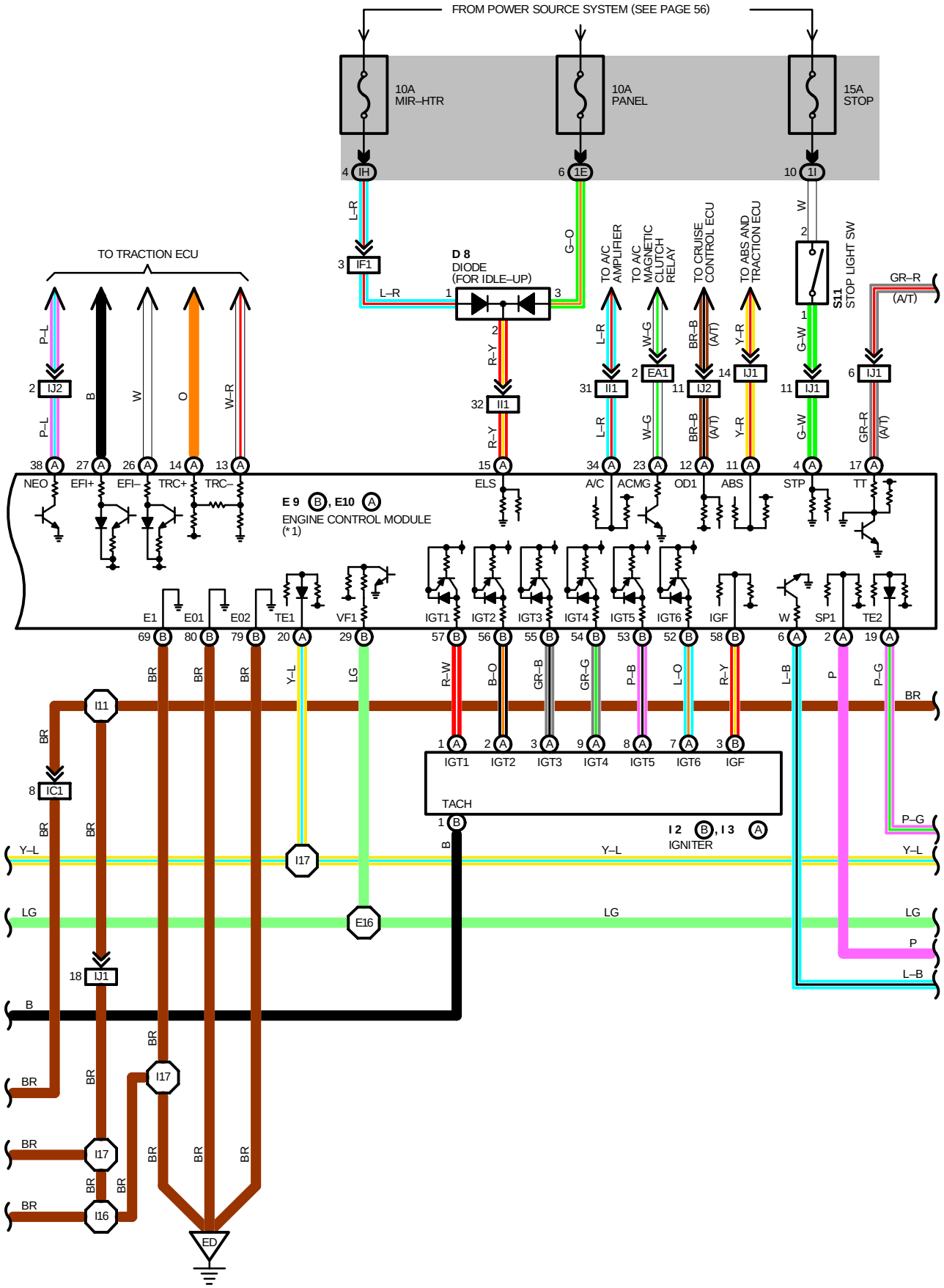
FROM POWER SOURCE SYSTEM (SEE PAGE 56)
10A MIR–HTR
10A PANEL
15A STOP
TO TRACTION ECU
D 8 DIODE (FOR IDLE–UP)
TO A/C AMPLIFIER
TO A/C MAGNETIC CLUTCH RELAY
TO CRUISE CONTROL ECU
TO ABS AND TRACTION ECU
S11 STOP LIGHT SW
E 9 B, E10 A ENGINE CONTROL MODULE (*1)
NEO
EFI+
EFI–
TRC+
TRC–
ELS
A/C
ACMG
OD1
ABS
STP
TT
E1
E01
E02
TE1
VF1
IGT1
IGT2
IGT3
IGT4
IGT5
IGT6
IGF
SP1
TE2
TACH
I2 B, I3 A IGNITER

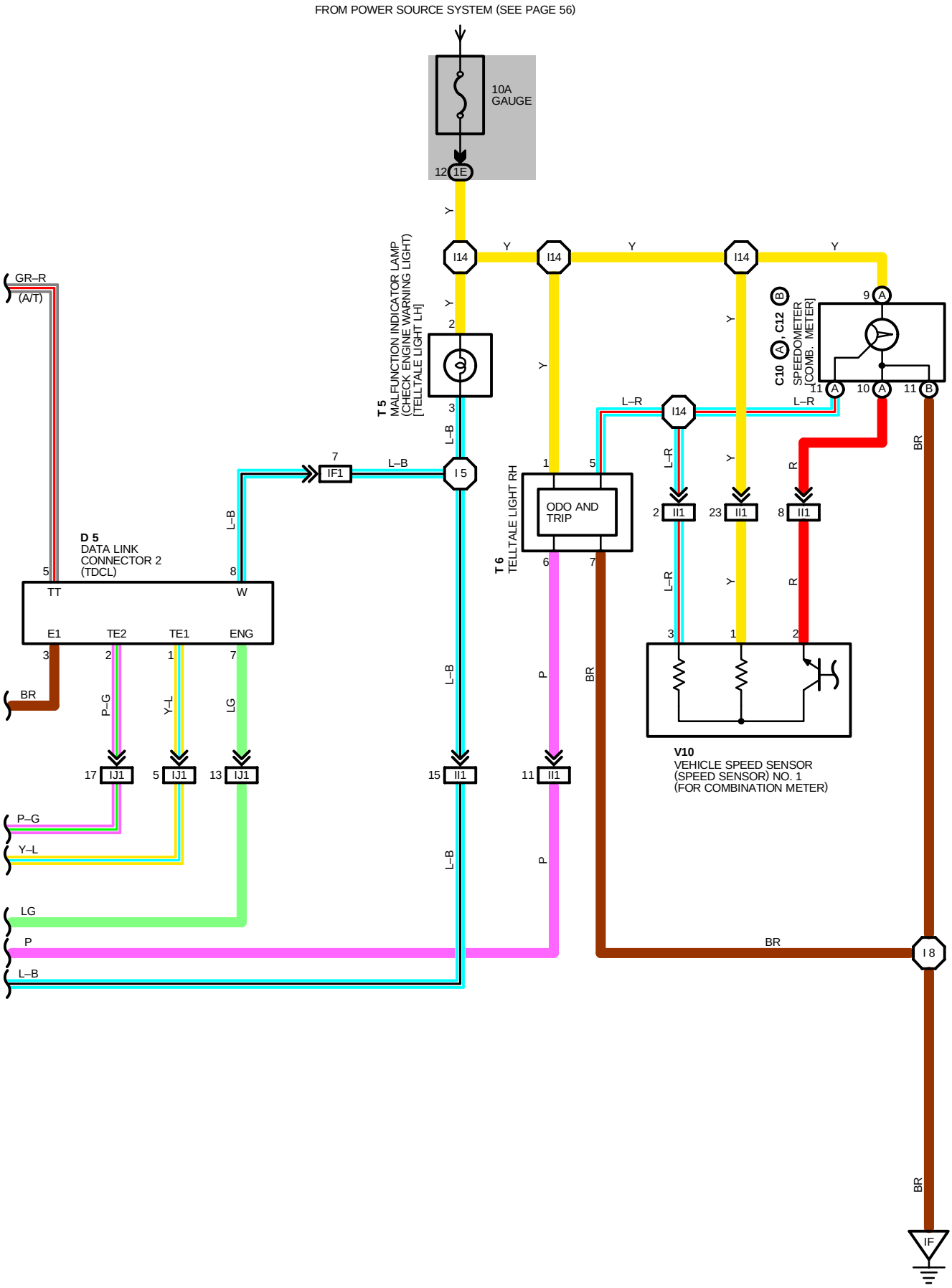
FROM POWER SOURCE SYSTEM (SEE PAGE 56)
10A
GAUGE
12 1E
Y
I14
Y
I14
Y
I14
Y
T 5
MALFUNCTION INDICATOR LAMP
(CHECK ENGINE WARNING LIGHT)
[TELLTALE LIGHT LH]
2
3
L–B
7
IF1
L–B
I 5
C10 , C12
SPEEDOMETER
[COMB. METER]
B
A
9 A
11 A
10 A
11 B
L–R
I14
L–R
BR
GR–R
(A/T)
D 5
DATA LINK
CONNECTOR 2
(TDCL)
5
TT
8
W
E1
TE2
TE1
ENG
3
2
1
7
BR
P–G
Y–L
LG
17 IJ1
5 IJ1
13 IJ1
T 6
TELLTALE LIGHT RH
1
5
ODO AND
TRIP
6
7
L–R
Y
R
2 II1
23 II1
8 II1
3
1
2
V10
VEHICLE SPEED SENSOR
(SPEED SENSOR) NO. 1
(FOR COMBINATION METER)
L–B
P
BR
15 II1
11 II1
P–G
Y–L
LG
P
L–B
BR
I 8
BR
IF

ENGINE CONTROL (FOR 2JZ–GTE)

SERVICE HINTS

EFI MAIN RELAY

(2) 3– **(2)** 5 : CLOSED WITH IGNITION SW AT **ON** POSITION

EFI NO. 2 RELAY

(2) 3– **(2)** 5 : CLOSED WITH IGNITION SW AT **ON** POSITION

E 3 ENGINE COOLANT TEMP. SENSOR (EFI WATER TEMP. SENSOR)

1– 2: **10–20** KΩ (**–20**˚C, **–4**˚F)
4– 7 KΩ (**0**˚C, **32**˚F)
2– 3 KΩ (**20**˚C, **68**˚F)
0.9–1.3 KΩ (**40**˚C, **104**˚F)
0.4–0.7 KΩ (**60**˚C, **140**˚F)
0.2–0.4 KΩ (**80**˚C, **176**˚F)

I 1 IDLE AIR CONTROL VALVE (ISC VALVE)

1, 3– 2: APPROX. **10–30** Ω

4, 6– 5: APPROX. **10–30** Ω

I12, I13, I14, I15, I16, I17 INJECTOR

1– 2: APPROX. **13–8** Ω

T 2 THROTTLE POSITION SENSOR

1– 4: APPROX. **4–9** KΩ

1– 3: **3.3– 10.0** KΩ WITH THROTTLE VALVE FULLY **OPENED** POSITION
0.2– 0.8 KΩ WITH CLEARANCE BETWEEN LEVER AND STOP SCREW **0** MM (**0** IN.)

1– 2: **0–2.3** KΩ WITH CLEARANCE BETWEEN LEVER AND STOP SCREW **0.45** MM (**0.0177** IN.)
INFINITY WITH CLEARANCE BETWEEN LEVER AND STOP SCREW **0.55** MM (**0.0216** IN.)

E 9(B), E10(A) ENGINE CONTROL MODULE (ENGINE AND ELECTRONICALLY CONTROLLED TRANSMISSION ECU)

(VOLTAGE AT ENGINE CONTROL MODULE (ENGINE AND ELECTRONICALLY CONTROLLED TRANSMISSION ECU) WIRING CONNECTORS)

BATT–E1	:	ALWAYS **9**–**14** VOLTS
IGSW–E1	:	**9–14** VOLTS WITH IGNITION SW ON
M–REL–E1	:	**9–14** VOLTS WITH IGNITION SW ON
+B–E1	:	**9–14** VOLTS WITH IGNITION SW ON
IDL1–E2	:	**9–14** VOLTS WITH IGNITION SW ON AND THROTTLE VALVE FULLY OPEN
	:	**0 –1.5** VOLTS WITH IGNITION SW ON AND THROTTLE VALVE FULLY CLOSED
VTA1–E2	:	**0.3– 0.8** VOLTS WITH IGNITION SW ON AND THROTTLE VALVE FULLY CLOSED
	:	**3.2–4.9** VOLTS WITH IGNITION SW ON AND THROTTLE VALVE OPEN
#10, #20, #30–E01, E02	:	PULSE GENERATION (ENGINE IDLING)
#40, #50, #60–E01, E02	:	PULSE GENERATION (ENGINE IDLING)
THA–E2	:	**0.5–3.4** VOLTS WITH IGNITION SW ON AND INTAKE AIR TEMP. **20**˚C **(68**˚F)
THW–E2	:	**0.2–1.0** VOLTS WITH IGNITION SW ON AND COOLANT TEMP. **80**˚C **(176**˚F)
STA–E1	:	**6–14** VOLTS WITH ENGINE CRANKING
ISC1, ISC2, ISC3, ISC4–E1	:	PULSE GENERATION (ENGINE IDLING)
W–E1	:	**9–14** VOLTS WITH ENGINE IDLING
IGF–E1	:	PULSE GENERATION (ENGINE IDLING)
NSW–E1	:	**0–3** VOLTS WITH IGNITION SW ON AND SHIFT LEVER **P** OR **N** POSITION
		9–14 VOLTS WITH IGNITION SW ON AND SHIFT LEVER EXCEPT **P** OR **N** POSITION
SP1	:	PULSE GENERATION
TE1, TE2–E1	:	**9–14** VOLTS WITH IGNITION SW ON
A/C–E1	:	**0–1.5** VOLTS WITH IGNITION SW ON AND A/C OFF
		7.5–14 VOLTS WITH IGNITION SW ON AND A/C ON
ELS–E1	:	**9–14** VOLTS WITH TAILLIGHT ON, DEFOGGER ON
		0–1.5 VOLTS WITH TAILLIGHT OFF, DEFOGGER OFF
STP–E1	:	**7.5–14** VOLTS WITH STOP LIGHT SW ON (BRAKE PEDAL DEPRESSED)
		0–1.5 VOLTS WITH STOP LIGHT SW OFF

(RESISTANCE OF ENGINE CONTROL MODULE (ENGINE AND ELECTRONICALLY CONTROLLED TRANSMISSION ECU) WIRING CONNECTORS)

IDL1–E2	:	INFINITY WITH THROTTLE VALVE OPEN
	:	**0–2.3** KΩ WITH THROTTLE VALVE FULLY CLOSED
VTA1–E2	:	**3.3** KΩ – **10.0** KΩ WITH THROTTLE VALVE FULLY OPEN
	:	**200** Ω **–800** Ω WITH THROTTLE VALVE FULLY CLOSED
VCC–E2	:	**4** KΩ **–9** KΩ
THA–E2	:	**2** KΩ **–3** KΩ WITH INTAKE AIR TEMP. **20**˚C (**68**˚F)
THW–E2	:	**200** Ω**–400** Ω WITH COOLANT TEMP. **80**˚C (**176**˚F)
ISC1, ISC2, ISC3, ISC4– +B	:	**10–30** Ω
#10, #20, #30, #40, #50, #60– +B	:	**13.2 –14.2** Ω

: PARTS LOCATION

CODE	SEE PAGE	CODE	SEE PAGE	CODE	SEE PAGE
A 5	24 (2JZ–GTE)	H 5	24	P 2	25 (2JZ–GTE)
C 1	24	H11	29	S 1	25
C 2	24	I 1	25 (2JZ–GTE)	S 5	25
C 3	24	I 2 B	25	S11	29
C 9	28	I 3 A	25	T 2	25 (2JZ–GTE)
C10 A	28	I12	25 (2JZ–GTE)	T 5	29
C12 B	28	I13	25 (2JZ–GTE)	T 6	29
D 1	24 (2JZ–GTE)	I14	25 (2JZ–GTE)	T14	25
D 5	28	I15	25 (2JZ–GTE)	V 2	25 (2JZ–GTE)
D 8	28	I16	25 (2JZ–GTE)	V 3	25 (2JZ–GTE)
E 1	24 (2JZ–GTE)	I17	25 (2JZ–GTE)	V 4	25
E 3	24 (2JZ–GTE)	I19	29	V 5	25
E 9 B	29	J 2	29	V 6	25 (2JZ–GTE)
E10 A	29	K 1	25 (2JZ–GTE)	V 7	25
F14	30	K 2	25 (2JZ–GTE)	V 8	25
F15	30	M 1	25	V10	25 (2JZ–GTE)

: RELAY BLOCKS

CODE	SEE PAGE	RELAY BLOCKS (RELAY BLOCK LOCATION)
2	22	R/B NO. 2 (ENGINE COMPARTMENT LEFT)

: JUNCTION BLOCK AND WIRE HARNESS CONNECTOR

CODE	SEE PAGE	JUNCTION BLOCK AND WIRE HARNESS (CONNECTOR LOCATION)
1B	20	ENGINE ROOM MAIN WIRE AND J/B NO. 1 (LEFT KICK PANEL)
1E	20	INSTRUMENT PANEL WIRE AND J/B NO. 1 (LEFT KICK PANEL)
1H	20	COWL WIRE AND J/B NO. 1 (LEFT KICK PANEL)
1I		
1J		
1K		
2A	22	BATTERY AND J/B NO. 2 (ENGINE COMPARTMENT LEFT)

: CONNECTOR JOINING WIRE HARNESS AND WIRE HARNESS

CODE	SEE PAGE	JOINING WIRE HARNESS AND WIRE HARNESS (CONNECTOR LOCATION)
EA1	32 (2JZ–GTE)	ENGINE WIRE AND ENGINE ROOM MAIN WIRE (NEAR THE R/B NO. 2)
EA2	32	
IB1	36	ENGINE ROOM MAIN WIRE AND COWL WIRE (LEFT KICK PANEL)
IC1	36	FLOOR NO. 2 WIRE AND COWL WIRE (LEFT KICK PANEL)
IC2		
IF1	36	INSTRUMENT PANEL WIRE AND COWL WIRE (INSTRUMENT PANEL REINFORCEMENT LH)
II1	38	ENGINE WIRE AND INSTRUMENT PANEL WIRE (RIGHT KICK PANEL)
IJ1	38	ENGINE WIRE AND COWL WIRE (RIGHT KICK PANEL)
IJ2		
BP1	40	FUEL GAUGE WIRE AND FLOOR NO. 2 WIRE (LUGGAGE ROOM FRONT LH)

: GROUND POINTS

CODE	SEE PAGE	GROUND POINTS LOCATION
EB	32 (2JZ–GTE)	FRONT SIDE OF LEFT FENDER
ED	32 (2JZ–GTE)	REAR SIDE OF INTAKE MANIFOLD
IF	36	LEFT KICK PANEL
BI	40	LEFT QUARTER PILLAR

: SPLICE POINTS

CODE	SEE PAGE	WIRE HARNESS WITH SPLICE POINTS	CODE	SEE PAGE	WIRE HARNESS WITH SPLICE POINTS
E 7	32	ENGINE ROOM MAIN WIRE	I 5	38	INSTRUMENT PANEL WIRE
E 9			I 8		
E10	32	ENGINE WIRE	I11	38	COWL WIRE
E12			I14	38	INSTRUMENT PANEL WIRE
E13			I16	38	CONSOLE BOX WIRE
E14			I17	38	ENGINE WIRE
E15			I20	38	COWL WIRE
E16			B 6	40	FLOOR NO. 2 WIRE
I 4	38	COWL WIRE			

ENGINE CONTROL (FOR 2JZ–GTE)

A 5 GRAY

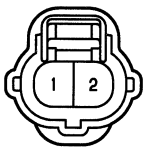

C 1 BLACK



C 2 BLACK



C 3 DARK GRAY



C 9

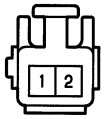

C10 Ⓐ BLUE

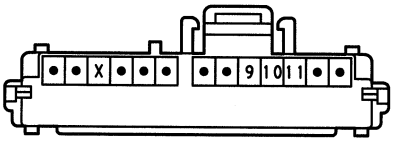

C12 Ⓑ

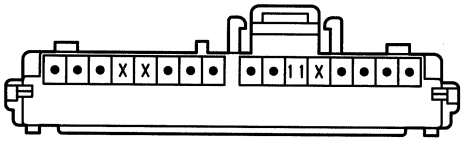

D 1 BLACK

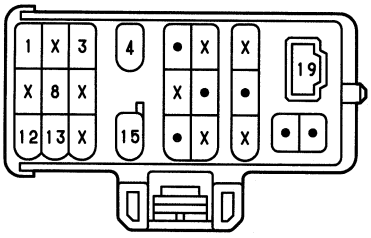

D 5 DARK GRAY

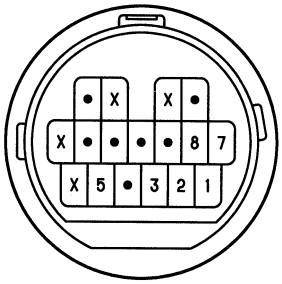

D 8 ORANGE

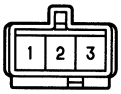

E 1 DARK GRAY



E 3 DARK GRAY



E 9 Ⓑ DARK GRAY

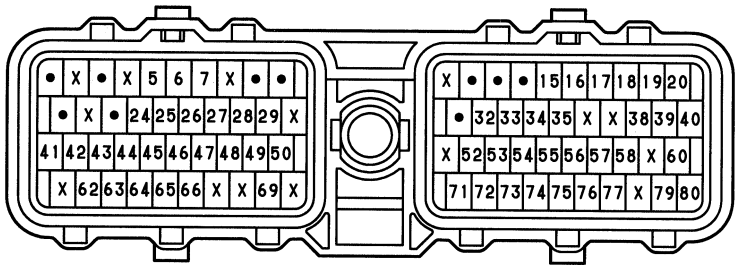

E10 Ⓐ DARK GRAY

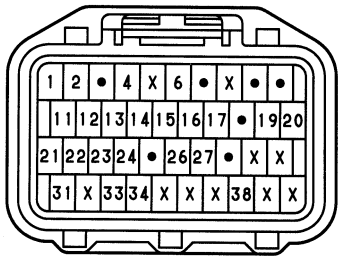

F14 DARK GRAY



F15 BLACK

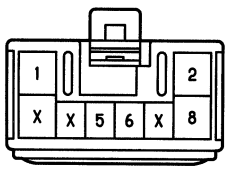

H 5 DARK GRAY

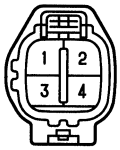

H11 DARK GRAY

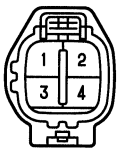

I 1 BLACK



I 2 Ⓑ BLACK



I 3 Ⓐ BLACK

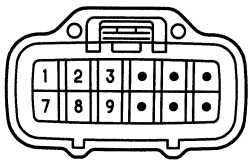

I12, I14, I16 DARK GRAY



I13, I15, I17 BROWN



I19

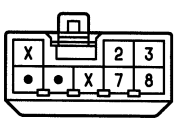

J 2

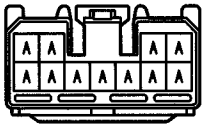

(HINT:SEE PAGE 7)

K 1, K 2 DARK GRAY



M 1 BLACK

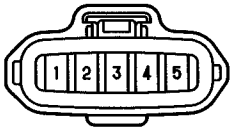

P 2 GRAY

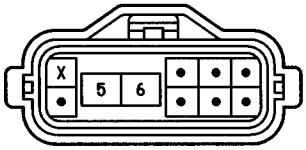

S 1 DARK GRAY

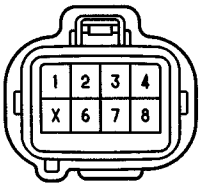

S 5 BLACK



S11 BLUE

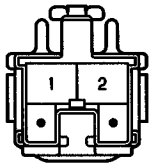

T 2 BLACK



T 5

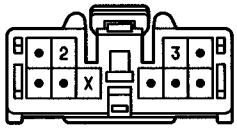

T 6

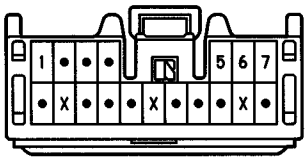

T14 BLACK



V 2 BLACK



V 3 BROWN



V 4 BLUE



V 5 BLACK



V 6 BLUE



V 7 BLACK



V 8 BLUE



V10 BLACK



ENGINE CONTROL (FOR 2JZ–GE)

SYSTEM OUTLINE

THE ENGINE CONTROL SYSTEM UTILIZES A MICROCOMPUTER AND MAINTAINS OVERALL CONTROL OF THE ENGINE, TRANSMISSION ETC. AN OUTLINE OF THE ENGINE CONTROL IS GIVEN HERE.

1. INPUT SIGNALS

(1) ENGINE COOLANT TEMP. (WATER TEMP.) SIGNAL CIRCUIT

THE ENGINE COOLANT TEMP. SENSOR (EFI WATER TEMP. SENSOR) DETECTS THE ENGINE COOLANT TEMP. (WATER TEMP.) AND HAS A BUILT–IN THERMISTOR WITH A RESISTANCE, WHICH VARIES ACCORDING TO THE ENGINE COOLANT TEMP. (WATER TEMP.) WHICH IS INPUT INTO **TERMINAL THW** OF THE ENGINE CONTROL MODULE (ENGINE AND ELECTRONICALLY CONTROLLED TRANSMISSION ECU) AS A CONTROL SIGNAL.

(2) INTAKE AIR TEMP. SIGNAL CIRCUIT

THE INTAKE AIR TEMP. SENSOR IS INSTALLED IN THE VOLUME AIR FLOW (AIR FLOW METER) AND DETECTS THE INTAKE AIR TEMP. WHICH IS INPUT AS A CONTROL SIGNAL TO **TERMINAL THA** OF THE ENGINE CONTROL MODULE (ENGINE AND ELECTRONICALLY CONTROLLED TRANSMISSION ECU).

(3) OXYGEN DENSITY SIGNAL CIRCUIT

(EXCEPT CALIFORNIA)

THE OXYGEN DENSITY IN THE EXHAUST EMISSION IS DETECTED BY THE OXYGEN SENSOR FRONT AND REAR SIDE AND INPUT AS A CONTROL SIGNAL TO **TERMINALS OX1, OX2** OF THE ENGINE CONTROL MODULE (ENGINE AND ELECTRONICALLY CONTROLLED TRANSMISSION ECU).

(FOR CALIFORNIA)

THE OXYGEN DENSITY IN THE EXHAUST EMISSION IS DETECTED BY THE HEATED OXYGEN SENSOR FRONT AND REAR SIDE AND INPUT AS A CONTROL SIGNAL TO **TERMINALS OX1, OX2, OX3** OF THE ENGINE CONTROL MODULE (ENGINE AND ELECTRONICALLY CONTROLLED TRANSMISSION ECU).

(4) RPM SIGNAL CIRCUIT

CRANKSHAFT POSITION IS DETECTED BY THE PICK–UP COIL INSTALLED INSIDE THE DISTRIBUTOR. CRANKSHAFT POSITION IS INPUT AS A CONTROL SIGNAL TO **TERMINALS G1** AND **G2** OF THE ENGINE CONTROL MODULE (ENGINE AND ELECTRONICALLY CONTROLLED TRANSMISSION ECU), AND ENGINE SPEED IS INPUT TO **TERMINAL NE**.

(5) THROTTLE POSITION SIGNAL CIRCUIT

THE THROTTLE POSITION SENSOR DETECTS THE THROTTLE VALVE OPENING ANGLE AS A CONTROL SIGNAL, WHICH IS INPUT INTO **TERMINAL VTA1** OF THE ENGINE CONTROL MODULE (ENGINE AND ELECTRONICALLY CONTROLLED TRANSMISSION ECU). WHEN THE VALVE IS COMPLETELY CLOSED, THE CONTROL SIGNAL IS INPUT INTO **TERMINAL IDL1**.

(6) VEHICLE SPEED CIRCUIT

THE VEHICLE SPEED IS DETECTED BY VEHICLE SPEED SENSOR (SPEED SENSOR) NO.1 INSTALLED IN THE TRANSMISSION AND THE SIGNAL IS INPUT TO **TERMINAL SP1** OF THE ENGINE CONTROL MODULE (ENGINE AND ELECTRONICALLY CONTROLLED TRANSMISSION ECU) VIA THE COMBINATION METER.

(7) NEUTRAL POSITION SIGNAL CIRCUIT

THE PARK/NEUTRAL POSITION SW (NEUTRAL START SW) DETECTS WHETHER THE SHIFT POSITION IS IN “N” OR “P” OR NOT, AND THE SIGNAL IS INPUT INTO **TERMINAL NSW** OF THE ENGINE CONTROL MODULE (ENGINE AND ELECTRONICALLY CONTROLLED TRANSMISSION ECU).

(8) A/C SW SIGNAL CIRCUIT

THE OPERATING VOLTAGE OF THE A/C MAGNETIC CLUTCH IS DETECTED AND THE SIGNAL IS INPUT INTO **TERMINAL ACMG** OF ENGINE CONTROL MODULE (ENGINE AND ELECTRONICALLY CONTROLLED TRANSMISSION ECU) AS A CONTROL SIGNAL.

(9) BATTERY SIGNAL CIRCUIT

VOLTAGE IS CONSTANTLY APPLIED TO **TERMINAL BATT** OF THE ENGINE CONTROL MODULE (ENGINE AND ELECTRONICALLY CONTROLLED TRANSMISSION ECU). WITH THE IGNITION SW TURNED ON, THE VOLTAGE FOR ENGINE CONTROL MODULE (ENGINE AND ELECTRONICALLY CONTROLLED TRANSMISSION ECU) START–UP POWER SUPPLY IS APPLIED TO **TERMINALS +B** OF THE ENGINE CONTROL MODULE (ENGINE AND ELECTRONICALLY CONTROLLED TRANSMISSION ECU) VIA EFI MAIN RELAY.

THE CURRENT FLOWING THROUGH THE **IGN** FUSE FLOWS TO **TERMINAL IGSW** OF THE ENGINE CONTROL MODULE (ENGINE AND ELECTRONICALLY CONTROLLED TRANSMISSION ECU).

(10) INTAKE AIR VOLUME SIGNAL CIRCUIT

INTAKE AIR VOLUME IS DETECTED BY THE VOLUME AIR FLOW (AIR FLOW METER) AND THE SIGNAL IS INPUT TO **TERMINAL KS** OF THE ENGINE CONTROL MODULE (ENGINE AND ELECTRONICALLY CONTROLLED TRANSMISSION ECU) AS A CONTROL SIGNAL.

(11) STOP LIGHT SW SIGNAL CIRCUIT

THE STOP LIGHT SW IS USED TO DETECT WHETHER THE VEHICLE IS BRAKING OR NOT AND THE SIGNAL IS INPUT INTO **TERMINAL STP** OF THE ENGINE CONTROL MODULE (ENGINE AND ELECTRONICALLY CONTROLLED TRANSMISSION ECU) AS A CONTROL SIGNAL.

(12) STARTER SIGNAL CIRCUIT

TO CONFIRM WHETHER THE ENGINE IS CRANKING, THE VOLTAGE IS APPLIED TO THE STARTER MOTOR DURING CRANKING IS DETECTED AND THE SIGNAL IS INPUT INTO **TERMINAL STA** OF THE ENGINE CONTROL MODULE (ENGINE AND ELECTRONICALLY CONTROLLED TRANSMISSION ECU) AS A CONTROL SIGNAL.

(13) ENGINE KNOCK SIGNAL CIRCUIT

ENGINE KNOCKING IS DETECTED BY KNOCK SENSOR FRONT AND REAR SIDE AND THE SIGNAL IS INPUT INTO **TERMINALS KNK1** AND **KNK2** AS A CONTROL SIGNAL.

2. CONTROL SYSTEM

***** SEQUENTIAL MULTIPORT FUEL INJECTION (ELECTRONIC FUEL INJECTION) SYSTEM

THE SEQUENTIAL MULTIPORT FUEL INJECTION (ELECTRONIC FUEL INJECTION) SYSTEM MONITORS THE ENGINE CONDITION THROUGH THE SIGNALS INPUT FROM EACH SENSOR (INPUT SIGNALS FROM (1) TO (13) ETC.) TO THE ENGINE CONTROL MODULE (ENGINE AND ELECTRONICALLY CONTROLLED TRANSMISSION ECU). THE BEST FUEL INJECTION TIMING IS DECIDED BASED ON THIS DATA AND THE PROGRAM MEMORIZED BY THE ENGINE CONTROL MODULE (ENGINE AND ELECTRONICALLY CONTROLLED TRANSMISSION ECU), AND THE CONTROL SIGNAL IS OUTPUT TO **TERMINALS #10, #20, #30, 40, #50** AND **#60** OF THE ENGINE CONTROL MODULE (ENGINE AND ELECTRONICALLY CONTROLLED TRANSMISSION ECU) TO OPERATE THE INJECTOR (INJECT THE FUEL). THE SEQUENTIAL MULTIPORT FUEL INJECTION (ELECTRONIC FUEL INJECTION) SYSTEM PRODUCES CONTROLS OF FUEL INJECTION OPERATION BY THE ENGINE CONTROL MODULE (ENGINE AND ELECTRONICALLY CONTROLLED TRANSMISSION ECU) IN RESPONSE TO THE DRIVING CONDITIONS.

***** ESA (ELECTRONIC SPARK ADVANCE) SYSTEM

THE ESA SYSTEM MONITORS THE ENGINE CONDITION THROUGH THE SIGNALS INPUT TO THE ENGINE CONTROL MODULE (ENGINE AND ELECTRONICALLY CONTROLLED TRANSMISSION ECU) FROM EACH SENSOR (INPUT SIGNALS FROM (1), (2), (4) TO (13) ETC.). THE BEST IGNITION TIMING IS DECIDED ACCORDING TO THIS DATA AND THE MEMORIZED DATA IN THE ENGINE CONTROL MODULE (ENGINE AND ELECTRONICALLY CONTROLLED TRANSMISSION ECU) AND THE CONTROL SIGNAL IS OUTPUT TO **TERMINAL IGT**. THIS SIGNAL CONTROLS THE IGNITER TO PROVIDE THE BEST IGNITION TIMING FOR THE DRIVING CONDITIONS.

***** HEATED OXYGEN SENSOR HEATER CONTROL SYSTEM (FOR CALIFORNIA)

THE MAIN HEATED OXYGEN SENSOR FRONT AND REAR SIDE, SUB HEATED OXYGEN SENSOR HEATER CONTROL SYSTEM TURNS THE HEATER ON WHEN THE INTAKE AIR VOLUME IS LOW (TEMP. OF EXHAUST EMISSIONS IS LOW), AND WARMS UP THE OXYGEN SENSOR TO IMPROVE DETECTION PERFORMANCE OF THE SENSOR. THE ENGINE CONTROL MODULE (ENGINE AND ELECTRONICALLY CONTROLLED TRANSMISSION ECU) EVALUATES THE SIGNALS FROM EACH SENSOR (INPUT SIGNALS FROM (1), (2), (4), (9) TO (11) ETC.), AND OUTPUTS CURRENT TO **TERMINALS HT1**, **HT2, HT3** TO CONTROL THE HEATER.

***** IDLE AIR CONTROL (IDLE SPEED CONTROL) SYSTEM

THE IDLE AIR CONTROL (ISC) SYSTEM (STEP MOTOR TYPE) INCREASES THE ENGINE SPEED AND PROVIDES IDLING STABILITY FOR FAST IDLE–UP WHEN THE ENGINE IS COLD, AND WHEN THE IDLE SPEED HAS DROPPED DUE TO ELECTRICAL LOAD AND SO ON. THE ENGINE CONTROL MODULE (ENGINE AND ELECTRONICALLY CONTROLLED TRANSMISSION ECU) EVALUATES THE SIGNALS FROM EACH SENSOR (INPUT SIGNALS FROM (1), (4), (5), (8), (9), (11) ETC.), OUTPUTS CURRENT TO **TERMINALS ISC1, ISC2, ISC3** AND **ISC4** TO CONTROL THE IDLE AIR CONTROL VALVE (ISC VALVE).

***** EGR CONTROL SYSTEM

THE EGR CONTROL SYSTEM DETECTS THE SIGNAL FROM EACH SENSOR (INPUT SIGNALS FROM (1), (4), (9), (10) ETC.), AND OUTPUTS CURRENT TO **TERMINAL EGR** TO CONTROL THE EGR VALVE.

***** FUEL PUMP CONTROL SYSTEM

THE ENGINE CONTROL MODULE (ENGINE AND ELECTRONICALLY CONTROLLED TRANSMISSION ECU) OUTPUTS CURRENT TO **TERMINAL FPC** AND CONTROLS THE FUEL PUMP ECU AND FUEL PUMP DRIVE SPEED IN RESPONSE TO THE DRIVING CONDITIONS.

***** ACIS (ACOUSTIC CONTROL INDUCTION SYSTEM)

ACIS INCLUDES A VALVE IN THE BULKHEAD SEPARATING THE SURGE TANK INTO TWO PARTS. THIS VALVE IS OPENED AND CLOSED IN ACCORDANCE WITH THE DRIVING CONDITIONS TO CONTROL THE INTAKE MANIFOLD LENGTH IN TWO STAGES FOR INCREASED ENGINE OUTPUT IN ALL RANGES FROM LOW TO HIGH SPEEDS.

THE ENGINE CONTROL MODULE (ENGINE AND ELECTRONICALLY CONTROLLED TRANSMISSION ECU) JUDGES THE VEHICLE SPEED BY THE SIGNALS ((4), (5)) FROM EACH SENSOR AND OUTPUTS SIGNALS TO THE **TERMINAL ACIS** TO CONTROL THE VSV (FOR INTAKE CONTROL VALVE).

3. DIAGNOSIS SYSTEM

WITH THE DIAGNOSIS SYSTEM, WHEN THERE IS A MALFUNCTION IN THE ENGINE CONTROL MODULE (ENGINE AND ELECTRONICALLY CONTROLLED TRANSMISSION ECU) SIGNAL SYSTEM, THE MALFUNCTIONING SYSTEM IS RECORDED IN THE MEMORY. THE MALFUNCTIONING SYSTEM CAN BE FOUND BY READING THE CODE DISPLAYED BY THE MALFUNCTION INDICATOR LAMP (CHECK ENGINE WARNING LIGHT).

4. FAIL–SAFE SYSTEM

WHEN A MALFUNCTION HAS OCCURRED IN ANY SYSTEM, IF THERE IS A POSSIBILITY OF ENGINE TROUBLE BEING CAUSED BY CONTINUED CONTROL BASED ON THE SIGNALS FROM THAT SYSTEM, THE FAIL–SAFE SYSTEM EITHER CONTROLS THE SYSTEM BY USING DATA (STANDARD VALUES) RECORDED IN THE ENGINE CONTROL MODULE (ENGINE AND ELECTRONICALLY CONTROLLED TRANSMISSION ECU) MEMORY OR ELSE STOPS THE ENGINE.

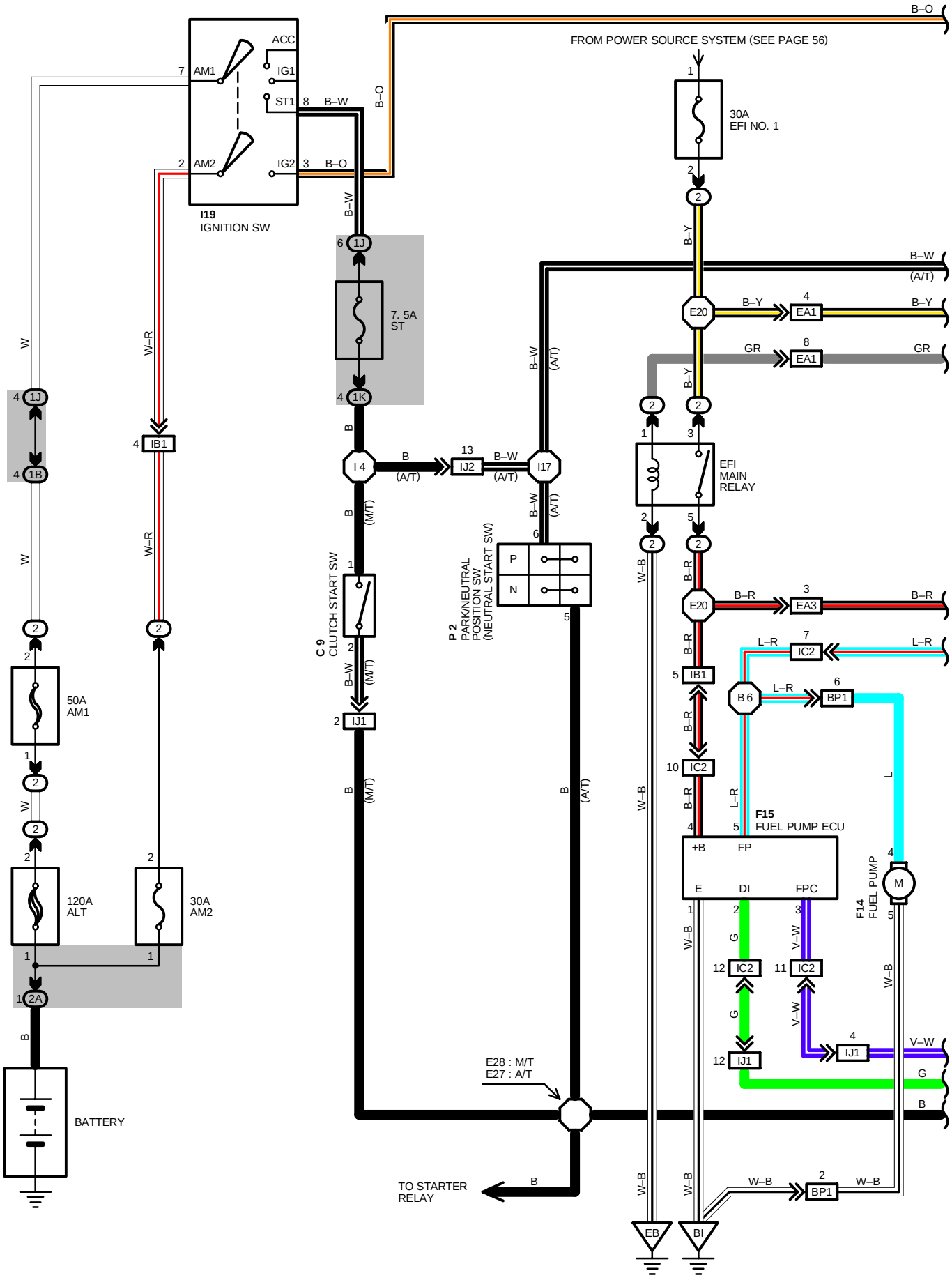
FROM POWER SOURCE SYSTEM (SEE PAGE 56)
B–O
30A
EFI NO. 1
I19
IGNITION SW
ACC
IG1
ST1
IG2
AM1
AM2
B–W
B–O
7, 5A
ST
EFI
MAIN
RELAY
B–Y
B–W
(A/T)
GR
EA1
EA3
E20
I 4
IJ2
I17
IB1
IC2
IJ1
BP1
B 6
C 9
CLUTCH START SW
P 2
PARK/NEUTRAL
POSITION SW
(NEUTRAL START SW)
P
N
(M/T)
(A/T)
F15
FUEL PUMP ECU
+B
FP
E
DI
FPC
F14
FUEL PUMP
M
50A
AM1
120A
ALT
30A
AM2
BATTERY
E28 : M/T
E27 : A/T
TO STARTER
RELAY
EB
BI
W
W–R
B
L
L–R
G
V–W
W–B
B–R

*1 : CALIFORNIA
*2 : EXCEPT CALIFORNIA
*3 : ENGINE AND ELECTRONICALLY CONTROLLED TRANSMISSION ECU

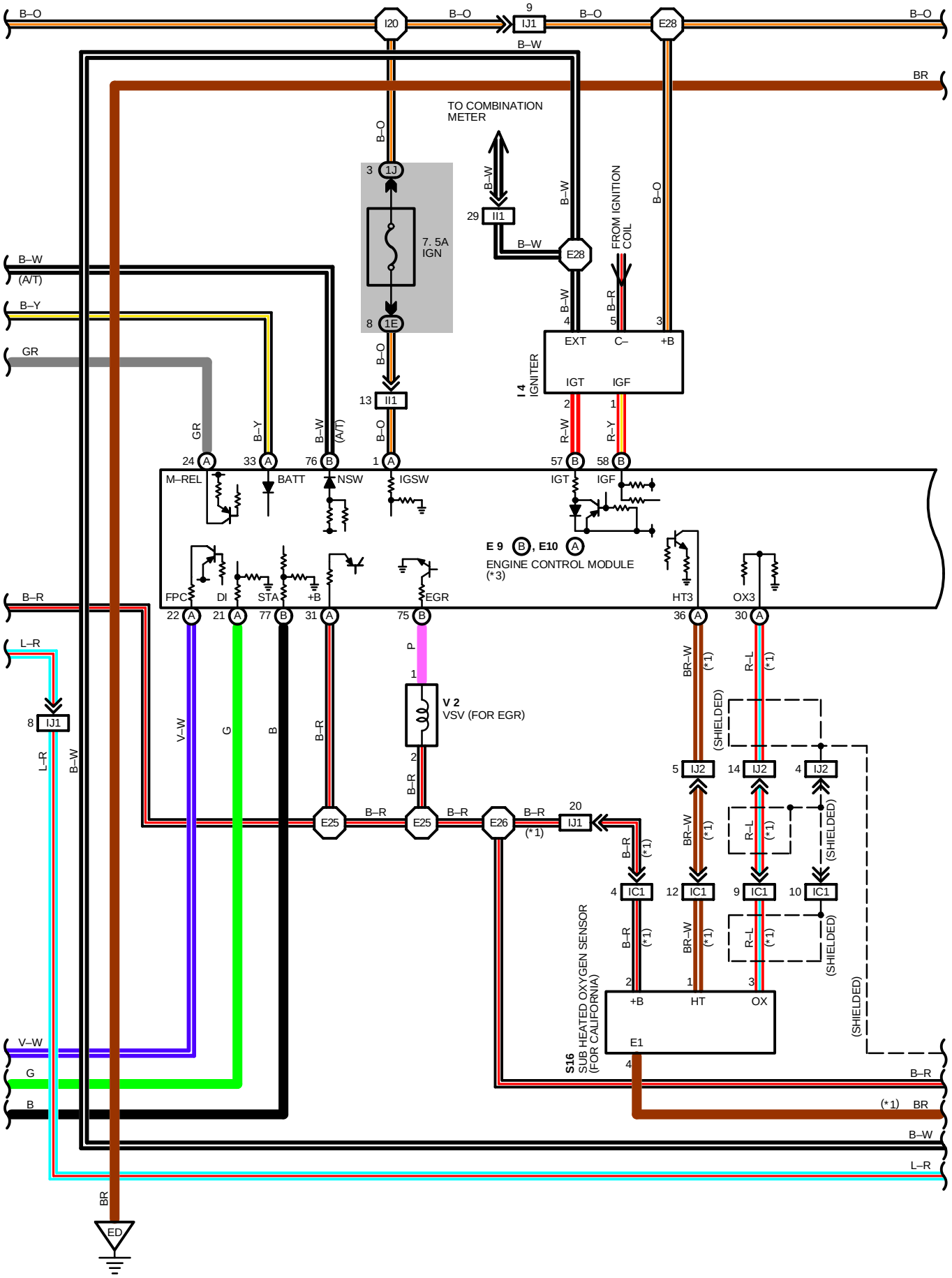

ENGINE CONTROL (FOR 2JZ–GE)

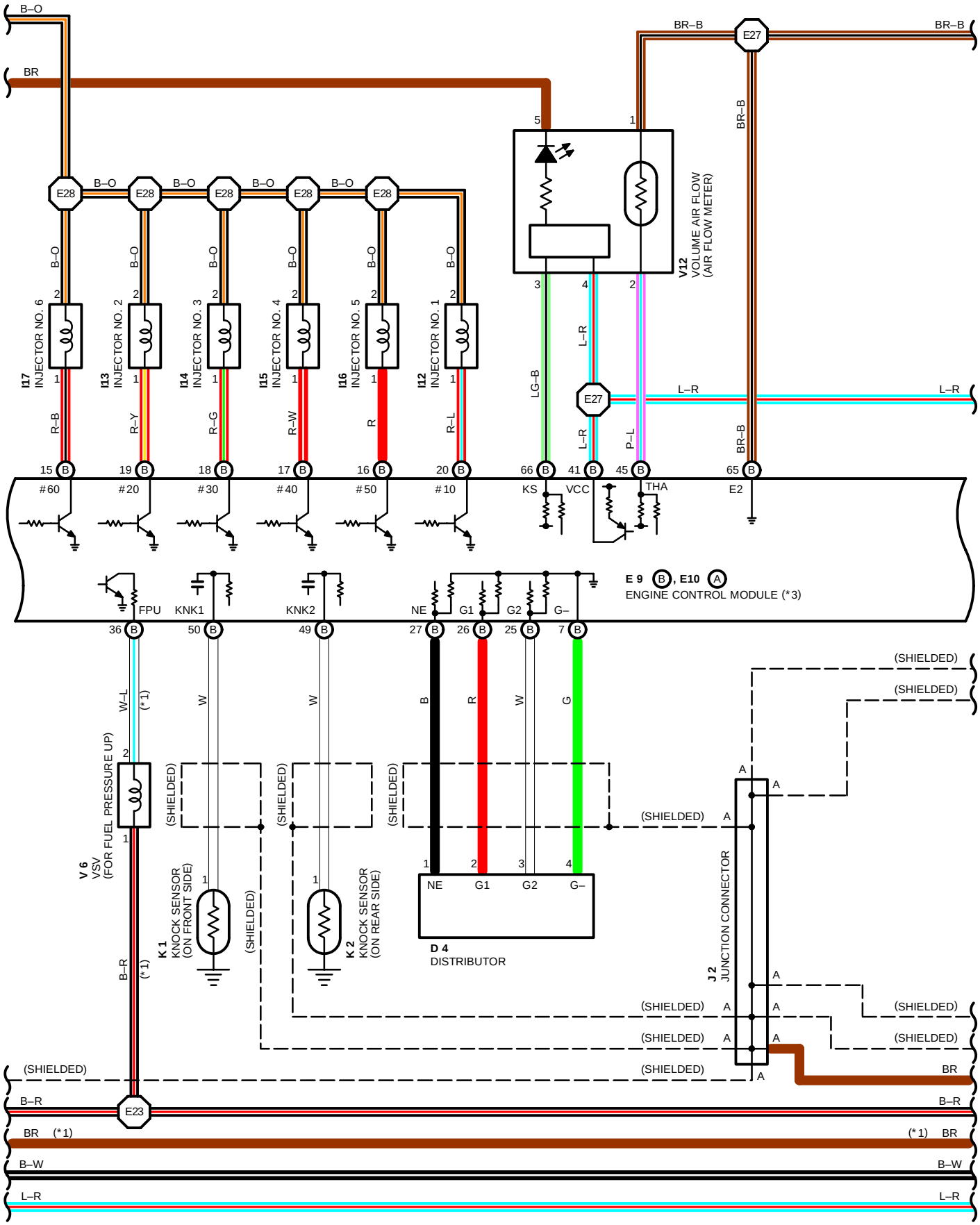

*1 : CALIFORNIA
*2 : EXCEPT CALIFORNIA
*3 : ENGINE AND ELECTRONICALLY CONTROLLED TRANSMISSION ECU

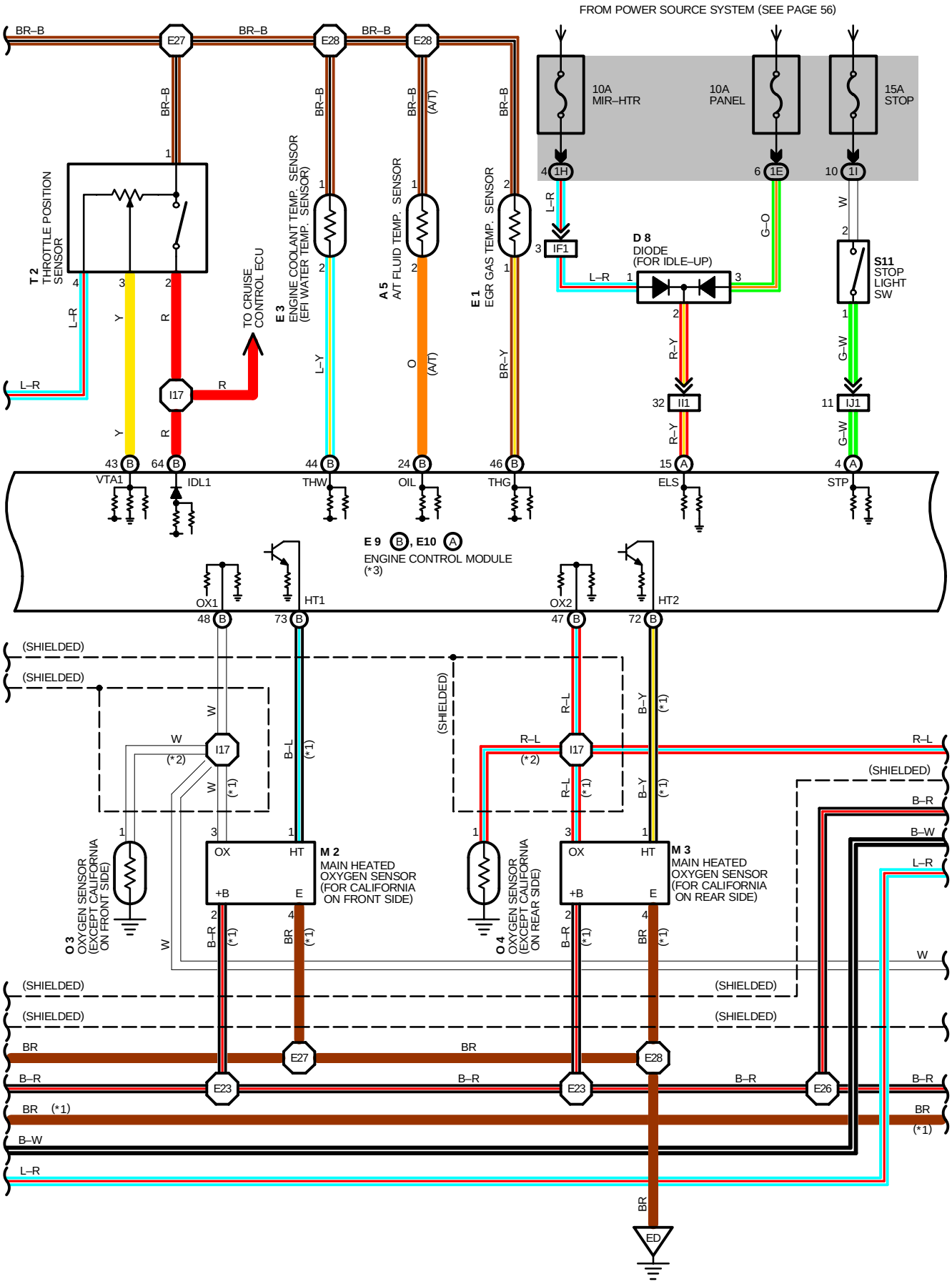

ENGINE CONTROL (FOR 2JZ–GE)

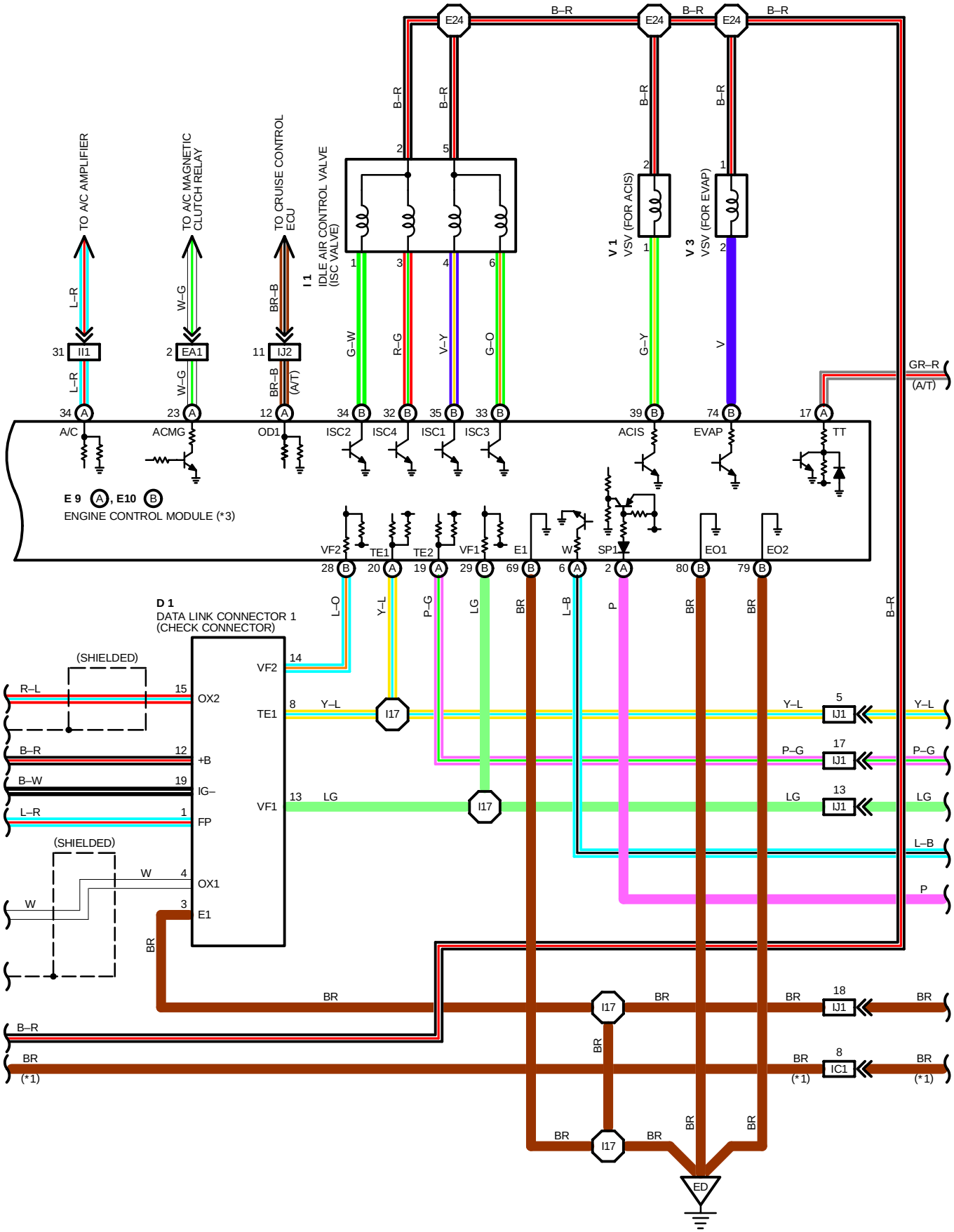

*1 : CALIFORNIA
*2 : EXCEPT CALIFORNIA
*3 : ENGINE AND ELECTRONICALLY CONTROLLED TRANSMISSION ECU

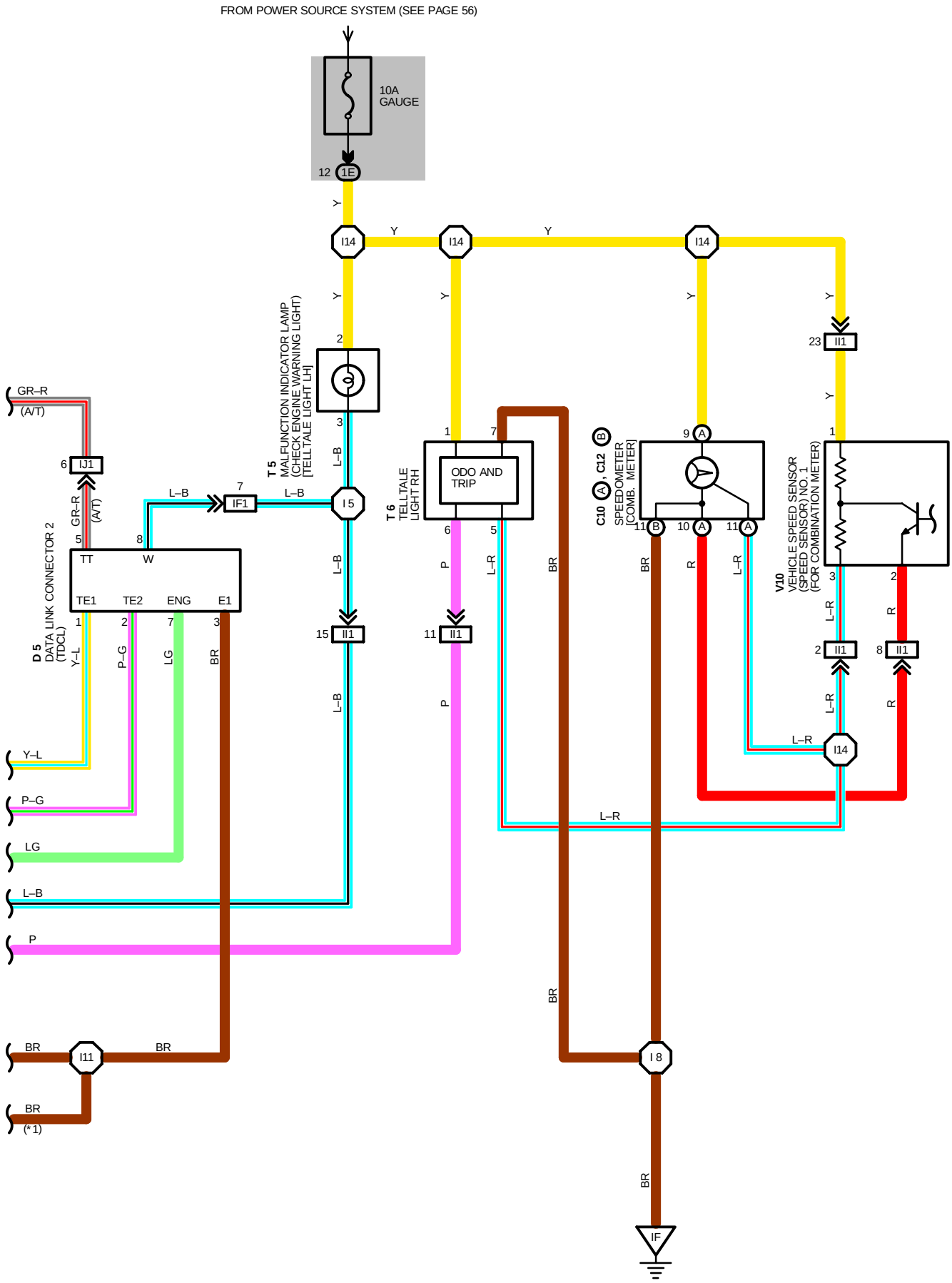

ENGINE CONTROL (FOR 2JZ–GE)

SERVICE HINTS

EFI MAIN RELAY

(2) 3– **(2)** 5 : CLOSED WITH IGNITION SW AT **ON** POSITION

E 3 ENGINE COOLANT TEMP. SENSOR (EFI WATER TEMP. SENSOR)

1– 2: **10–20** KΩ (**–20**˚C, **–4**˚F)
4– 7 KΩ (**0**˚C, **32**˚F)
2– 3 KΩ (**20**˚C, **68**˚F)
0.9–1.3 KΩ (**40**˚C, **104**˚F)
0.4–0.7 KΩ (**60**˚C, **140**˚F)
0.2–0.4 KΩ (**80**˚C, **176**˚F)

I 1 IDLE AIR CONTROL VALVE (ISC VALVE)

1, 3– 2: APPROX. **10–30** Ω
4, 6– 5: APPROX. **10–30** Ω

I12, I13, I14, I15, I16, I17 INJECTOR

1– 2: APPROX. **13–8** Ω

T 2 THROTTLE POSITION SENSOR

1– 4: APPROX. **4–9** KΩ
1– 3: **3.3– 10.0** KΩ WITH THROTTLE VALVE FULLY **OPENED** POSITION
0.2– 0.8 KΩ WITH CLEARANCE BETWEEN LEVER AND STOP SCREW **0** MM (**0** IN.)
1– 2: **0–2.3** KΩ WITH CLEARANCE BETWEEN LEVER AND STOP SCREW **0.45** MM (**0.0177** IN.)
INFINITY WITH CLEARANCE BETWEEN LEVER AND STOP SCREW **0.55** MM (**0.0216** IN.)

E 9(B), E10(A) ENGINE CONTROL MODULE (ENGINE AND ELECTRONICALLY CONTROLLED TRANSMISSION ECU)

(VOLTAGE AT ENGINE CONTROL MODULE (ENGINE AND ELECTRONICALLY CONTROLLED TRANSMISSION ECU) WIRING CONNECTORS)

BATT–E1	:	ALWAYS **9**–**14** VOLTS
IGSW–E1	:	**9–14** VOLTS WITH IGNITION SW ON
M–REL–E1	:	**9–14** VOLTS WITH IGNITION SW ON
+B–E1	:	**9–14** VOLTS WITH IGNITION SW ON
IDL1–E2	:	**9–14** VOLTS WITH IGNITION SW ON AND THROTTLE VALVE FULLY OPEN
	:	**0 –1.5** VOLTS WITH IGNITION SW ON AND THROTTLE VALVE FULLY CLOSED
VTA1–E2	:	**0.3– 0.8** VOLTS WITH IGNITION SW ON AND THROTTLE VALVE FULLY CLOSED
	:	**3.2–4.9** VOLTS WITH IGNITION SW ON AND THROTTLE VALVE OPEN
#10, #20, #30–E01, E02	:	PULSE GENERATION (ENGINE IDLING)
#40, #50, #60–E01, E02	:	PULSE GENERATION (ENGINE IDLING)
THA–E2	:	**0.5–3.4** VOLTS WITH IGNITION SW ON AND INTAKE AIR TEMP. **20**˚C **(68**˚F)
THW–E2	:	**0.2–1.0** VOLTS WITH IGNITION SW ON AND COOLANT TEMP. **80**˚C **(176**˚F)
STA–E1	:	**6–14** VOLTS WITH ENGINE CRANKING
ISC1, ISC2, ISC3, ISC4–E1	:	PULSE GENERATION (ENGINE IDLING)
W–E1	:	**9–14** VOLTS WITH ENGINE IDLING
IGF–E1	:	PULSE GENERATION (ENGINE IDLING)
NSW–E1	:	**0.3** VOLTS WITH IGNITION SW ON AND SHIFT LEVER **P** OR **N** POSITION
		9–14 VOLTS WITH IGNITION SW ON AND SHIFT LEVER EXCEPT **P** OR **N** POSITION
SP1	:	PULSE GENERATION
TE1, TE2–E1	:	**9–14** VOLTS WITH IGNITION SW ON
A/C–E1	:	**0–1.5** VOLTS WITH IGNITION SW ON AND A/C OFF
		7.5–14 VOLTS WITH IGNITION SW ON AND A/C ON
ELS–E1	:	**9–14** VOLTS WITH TAILLIGHT ON, DEFOGGER ON
		0–1.5 VOLTS WITH TAILLIGHT OFF, DEFOGGER OFF
STP–E1	:	**7.5–14** VOLTS WITH STOP LIGHT SW ON (BRAKE PEDAL DEPRESSED)
		0–1.5 VOLTS WITH STOP LIGHT SW OFF

(RESISTANCE OF ENGINE CONTROL MODULE (ENGINE AND ELECTRONICALLY CONTROLLED TRANSMISSION ECU) CONNECTORS)

IDL1–E2	:	INFINITY WITH THROTTLE VALVE OPEN
	:	**0–2.3** KΩ WITH THROTTLE VALVE FULLY CLOSED
VTA1–E2	:	**3.3** KΩ – **10.0** KΩ WITH THROTTLE VALVE FULLY OPEN
	:	**200** Ω **–800** Ω WITH THROTTLE VALVE FULLY CLOSED
VCC–E2	:	**4** KΩ **–9** KΩ
THA–E2	:	**2** KΩ **–3** KΩ WITH INTAKE AIR TEMP. **20**˚C (**68**˚F)
THW–E2	:	**200** Ω**–400** Ω WITH COOLANT TEMP. **80**˚C (**176**˚F)
ISC1, ISC2, ISC3, ISC4– +B	:	**10–30** Ω
#10, #20, #30, #40, #50, #60– +B	:	**13.2 –14.2** Ω
ACIS– +B	:	**38.5 –44.5** Ω

: PARTS LOCATION

CODE	SEE PAGE	CODE	SEE PAGE	CODE	SEE PAGE
A 5	26 (2JZ–GE)	I 1	27 (2JZ–GE)	O 3	27
C 9	28	I 4	27	O 4	27
C10 A	28	I12	27 (2JZ–GE)	P 2	27 (2JZ–GE)
C12 B	28	I13	27 (2JZ–GE)	S11	29
D 1	26 (2JZ–GE)	I14	27 (2JZ–GE)	S16	29
D 4	26	I15	27 (2JZ–GE)	T 2	27 (2JZ–GE)
D 5	28	I16	27 (2JZ–GE)	T 5	29
D 8	28	I17	27 (2JZ–GE)	T 6	29
E 1	26 (2JZ–GE)	I19	29	V 1	27
E 3	26 (2JZ–GE)	J 2	29	V 2	27 (2JZ–GE)
E 9 B	29	K 1	27 (2JZ–GE)	V 3	27 (2JZ–GE)
E10 A	29	K 2	27 (2JZ–GE)	V 6	27 (2JZ–GE)
F14	30	M 2	27	V10	27 (2JZ–GE)
F15	30	M 3	27	V12	27

: RELAY BLOCKS

CODE	SEE PAGE	RELAY BLOCKS (RELAY BLOCK LOCATION)
2	22	R/B NO. 2 (ENGINE COMPARTMENT LEFT)

: JUNCTION BLOCK AND WIRE HARNESS CONNECTOR

CODE	SEE PAGE	JUNCTION BLOCK AND WIRE HARNESS (CONNECTOR LOCATION)
1B	20	ENGINE ROOM MAIN WIRE AND J/B NO. 1 (LEFT KICK PANEL)
1E	20	INSTRUMENT PANEL WIRE AND J/B NO. 1 (LEFT KICK PANEL)
1H	20	COWL WIRE AND J/B NO. 1 (LEFT KICK PANEL)
1I		
1J		
1K		
2A	22	BATTERY AND J/B NO. 2 (ENGINE COMPARTMENT LEFT)

: CONNECTOR JOINING WIRE HARNESS AND WIRE HARNESS

CODE	SEE PAGE	JOINING WIRE HARNESS AND WIRE HARNESS (CONNECTOR LOCATION)
EA1	34 (2JZ–GE)	ENGINE WIRE AND ENGINE ROOM MAIN WIRE (NEAR THE R/B NO. 2)
EA3	34	
IB1	36	ENGINE ROOM MAIN WIRE AND COWL WIRE (LEFT KICK PANEL)
IC1	36	FLOOR NO. 2 WIRE AND COWL WIRE (LEFT KICK PANEL)
IC2		
IF1	36	INSTRUMENT PANEL WIRE AND COWL WIRE (INSTRUMENT PANEL REINFORCEMENT LH)
II1	38	ENGINE WIRE AND INSTRUMENT PANEL WIRE (RIGHT KICK PANEL)
IJ1	38	ENGINE WIRE AND COWL WIRE (RIGHT KICK PANEL)
IJ2		
BP1	40	FUEL GAUGE WIRE AND FLOOR NO. 2 WIRE (LUGGAGE ROOM FRONT LH)

: GROUND POINTS

CODE	SEE PAGE	GROUND POINTS LOCATION
EB	34 (2JZ–GE)	FRONT SIDE OF LEFT FENDER
ED	34 (2JZ–GE)	REAR SIDE OF INTAKE MANIFOLD
IF	36	LEFT KICK PANEL
BI	40	LEFT QUARTER PILLAR

: SPLICE POINTS

CODE	SEE PAGE	WIRE HARNESS WITH SPLICE POINTS	CODE	SEE PAGE	WIRE HARNESS WITH SPLICE POINTS
E20	34	ENGINE ROOM MAIN WIRE	I 5	38	INSTRUMENT PANEL WIRE
E23	34	ENGINE WIRE	I 8		
E24			I11	38	COWL WIRE
E25			I14	38	INSTRUMENT PANEL WIRE
E26			I17	38	ENGINE WIRE
E27			I20	38	COWL WIRE
E28			B 6	40	FLOOR NO. 2 WIRE
I 4	38	COWL WIRE			

A 5 GRAY

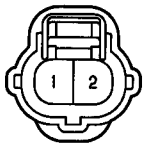

C 9

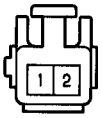

C10 (A) BLUE

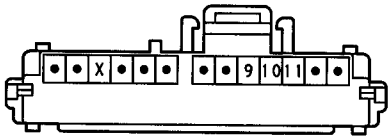

C12 (B)

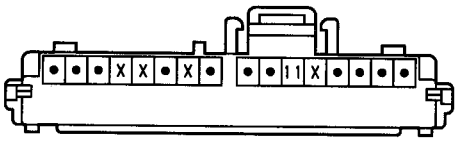

D 1 BLACK

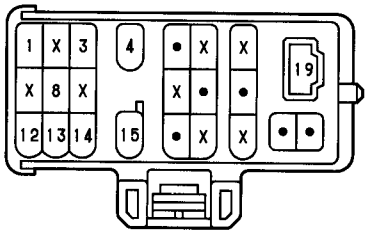

D 4 BLACK



(M/T) D 5 DARK GRAY

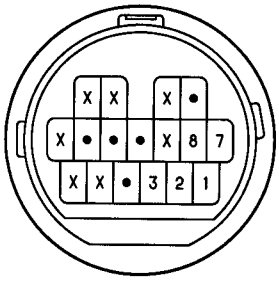

(A/T) D 5 DARK GRAY

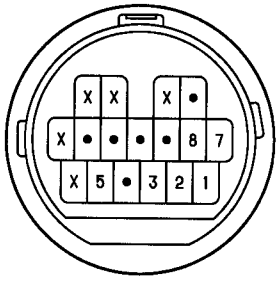

D 6 ORANGE

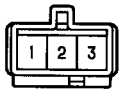

E 1 DARK GRAY



E 3 GREEN



E 9 (B) DARK GRAY

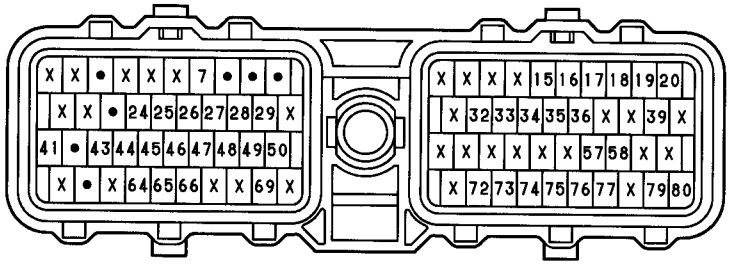

E10 (A) DARK GRAY

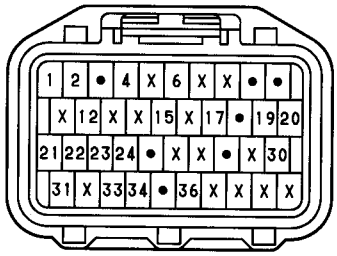

F14 DARK GRAY

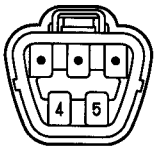

F15 BLACK

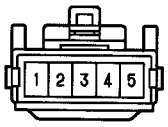

I 1 BLACK



I 4 BLACK

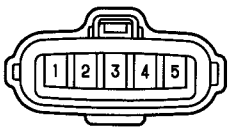

I12, I14, I16 DARK GRAY



I13, I15, I17 BROWN



I19

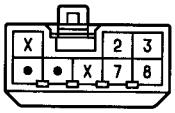

J 2

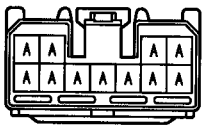

(HINT:SEE PAGE 7)

K 1, K 2 DARK GRAY



M 2 DARK GRAY

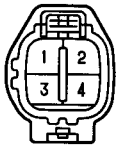

M 3 DARK GRAY

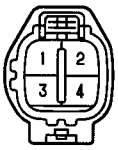

O 3,O 4 DARK GRAY

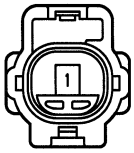

P 2 GRAY

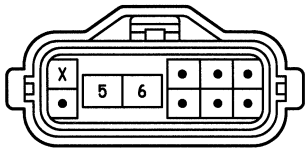

S11 BLUE

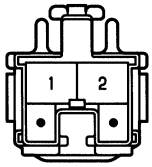

S16 GRAY

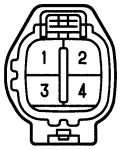

T 2 BLACK



T 5

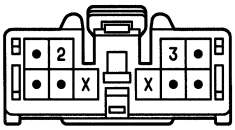

T 6

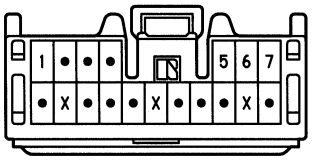

V 1 BROWN



V 2 BLACK



V 3 BLUE



V 6 BLUE



V10 BLACK



V12 BLACK



HEADLIGHT (FOR USA)

*1 : 2JZ–GTE
*2 : 2JZ–GE

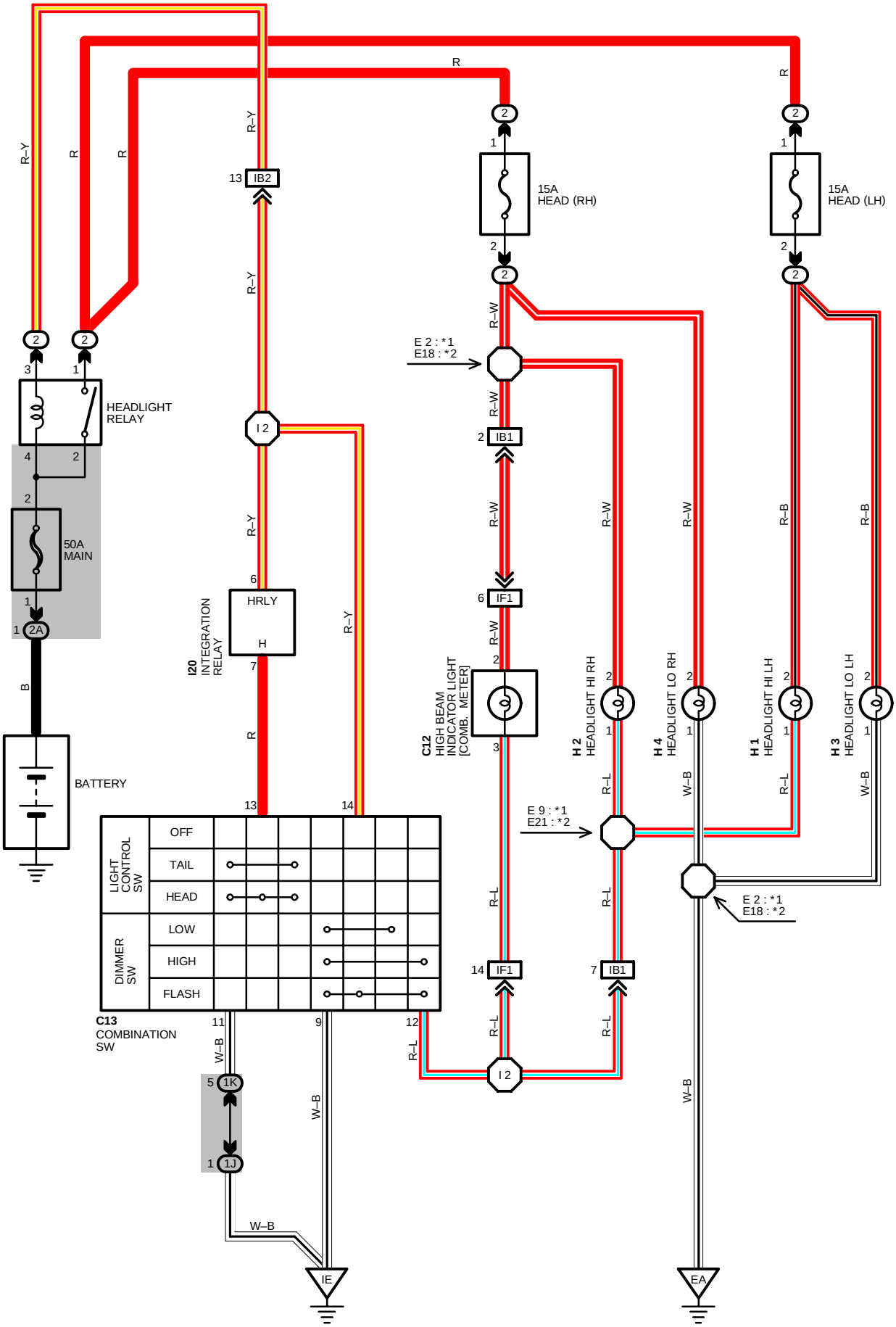

SERVICE HINTS

HEADLIGHT RELAY

2 1– : CLOSED WITH LIGHT CONTROL SW AT **HEAD** POSITION OR DIMMER SW AT **FLASH** POSITION

C13 LIGHT CONTROL SW [COMB. SW]

13–11 : CLOSED WITH LIGHT CONTROL SW AT **HEAD** POSITION

C13 DIMMER SW [COMB. SW]

14–9 : CLOSED WITH DIMMER SW AT **FLASH** POSITION

12–9 : CLOSED WITH DIMMER SW AT **HIGH** OR **FLASH** POSITION

: PARTS LOCATION

CODE	SEE PAGE	CODE	SEE PAGE	CODE	SEE PAGE
C12	28	**H 2**	24 (2JZ–GTE)	**H 4**	27 (2JZ–GTE)
C13	28		27 (2JZ–GE)		27 (2JZ–GE)
H 1	24 (2JZ–GTE)	**H 3**	24 (2JZ–GTE)	**I20**	29
	27 (2JZ–GE)		27 (2JZ–GE)		

: RELAY BLOCKS

CODE	SEE PAGE	RELAY BLOCKS (RELAY BLOCK LOCATION)
2	22	R/B NO. 2 (ENGINE COMPARTMENT LEFT)

: JUNCTION BLOCK AND WIRE HARNESS CONNECTOR

CODE	SEE PAGE	JUNCTION BLOCK AND WIRE HARNESS (CONNECTOR LOCATION)
1J	20	COWL WIRE AND J/B NO. 1 (LEFT KICK LEFT)
1K		
2A	22	BATTERY AND J/B NO. 2 (ENGINE COMPARTMENT LEFT)

: CONNECTOR JOINING WIRE HARNESS AND WIRE HARNESS

CODE	SEE PAGE	JOINING WIRE HARNESS AND WIRE HARNESS (CONNECTOR LOCATION)
IB1	36	ENGINE ROOM MAIN WIRE AND COWL WIRE (LEFT KICK PANEL)
IB2		
IF1	36	INSTRUMENT PANEL WIRE AND COWL WIRE (INSTRUMENT PANEL REINFORCEMENT LH)

: GROUND POINTS

CODE	SEE PAGE	GROUND POINTS LOCATION
EA	32 (2JZ–GTE)	FRONT SIDE OF RIGHT FENDER
	34 (2JZ–GE)	
IE	36	LEFT KICK PANEL

: SPLICE POINTS

CODE	SEE PAGE	WIRE HARNESS WITH SPLICE POINTS	CODE	SEE PAGE	WIRE HARNESS WITH SPLICE POINTS
E 2	32	ENGINE ROOM MAIN WIRE	**E21**	34	ENGINE ROOM MAIN WIRE
E 9			**I 2**	38	COWL WIRE
E18	34				

(2JZ–GTE) **C12**

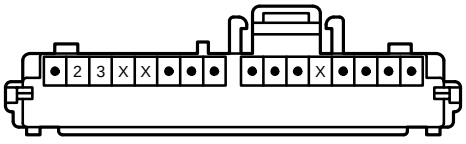

(2JZ–GE) **C12**

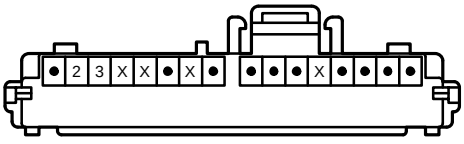

C13 BLACK

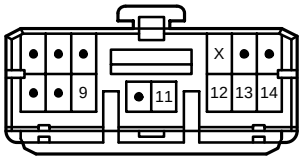

H 1 BLACK



H 2 BLACK



H 3 BROWN



H 4 BROWN



I20

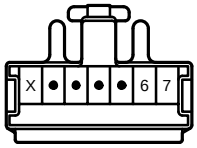

HEADLIGHT (FOR CANADA)

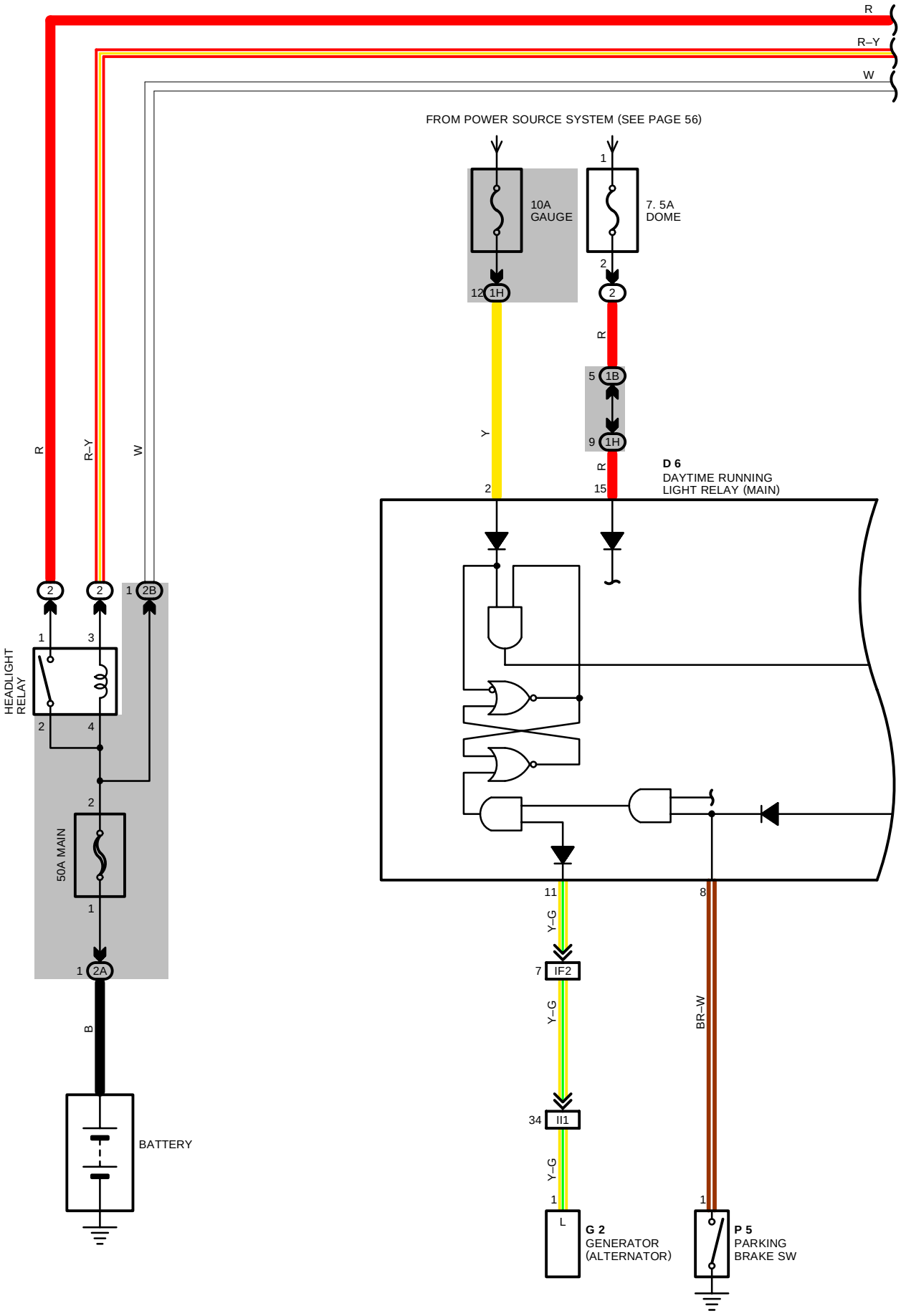

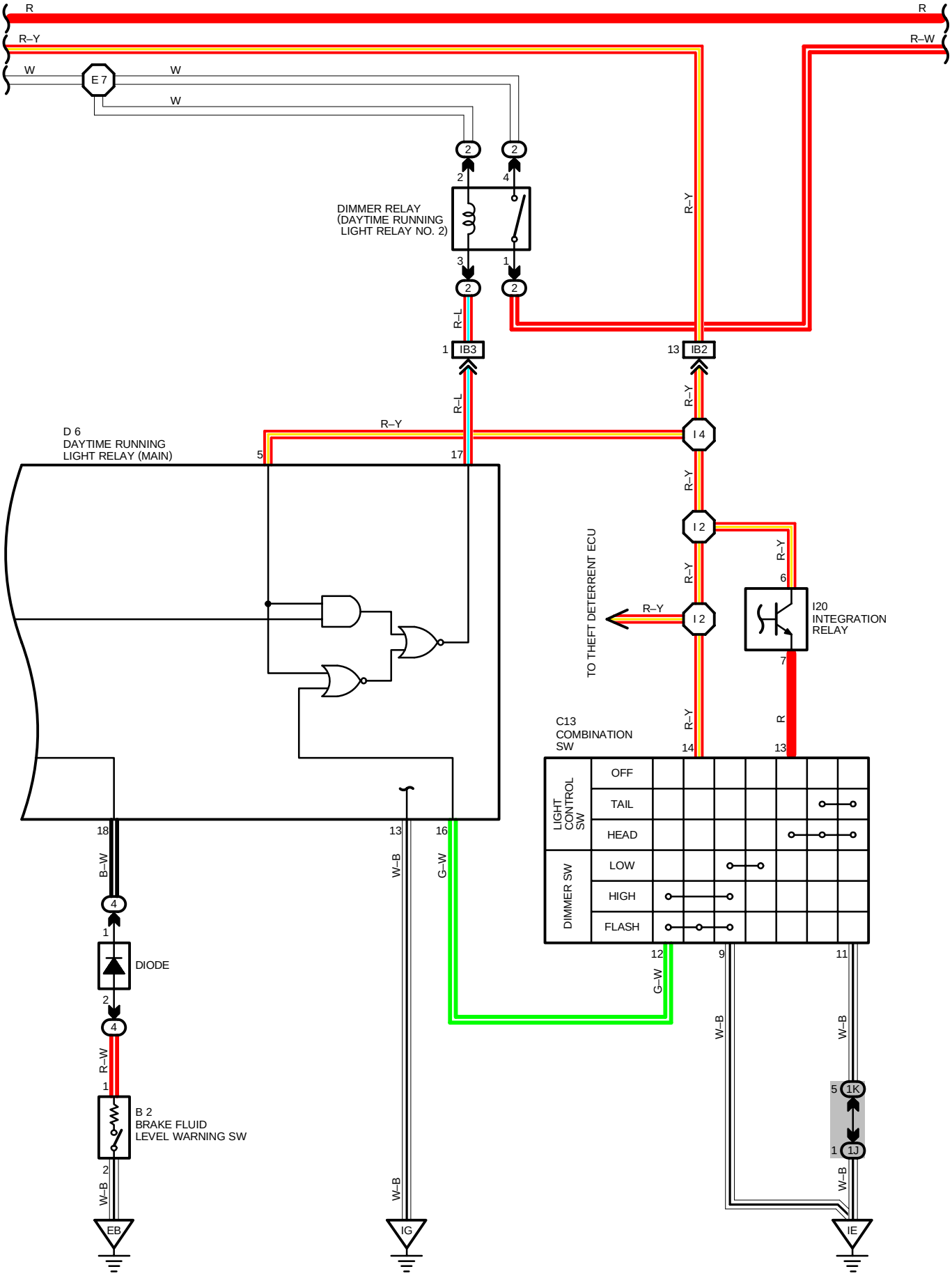
R
R–Y
W
E 7
W
W
R
R–W
DIMMER RELAY
(DAYTIME RUNNING
LIGHT RELAY NO. 2)
R–Y
R–L
IB3
IB2
D 6
DAYTIME RUNNING
LIGHT RELAY (MAIN)
I 4
I 2
I 2
TO THEFT DETERRENT ECU
I20
INTEGRATION
RELAY
C13
COMBINATION
SW
LIGHT
CONTROL
SW
OFF
TAIL
HEAD
DIMMER SW
LOW
HIGH
FLASH
B–W
DIODE
R–W
B 2
BRAKE FLUID
LEVEL WARNING SW
W–B
G–W
1K
1J
EB
IG
IE

HEADLIGHT (FOR CANADA)

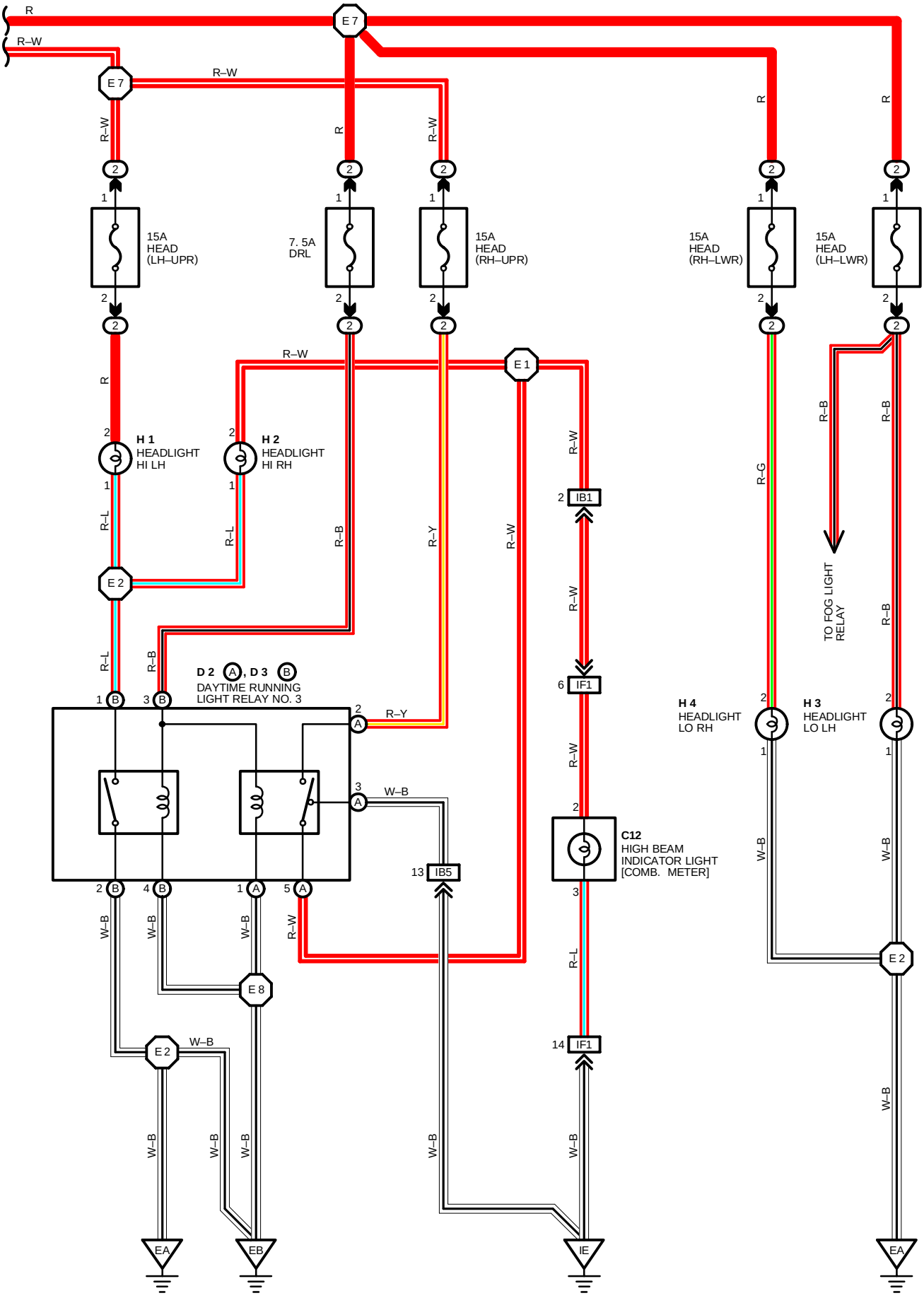

SYSTEM OUTLINE

VOLTAGE IS ALWAYS APPLIED FROM THE **MAIN** FUSE, THROUGH THE HEADLIGHT RELAY (COIL SIDE) TO **TERMINAL 5** OF THE DAYTIME RUNNING LIGHT RELAY (MAIN), **TERMINAL 6** OF INTEGRATION RELAY, **TERMINAL 14** OF DIMMER SW, DIMMER RELAY (DAYTIME RUNNING LIGHT RELAY NO. 2) (COIL SIDE), TO **TERMINAL 17** OF THE DAYTIME RUNNING LIGHT RELAY (MAIN). WHEN THE IGNITION SW IS TURNED ON, VOLTAGE FROM THE **GAUGE** FUSE IS APPLIED TO **TERMINAL 2** OF THE DAYTIME RUNNING LIGHT RELAY (MAIN).

1. DAYTIME RUNNING LIGHT OPERATION

WHEN THE ENGINE STARTS, VOLTAGE FROM **TERMINAL "L"** OF THE GENERATOR (ALTERNATOR) IS APPLIED TO **TERMINAL 11** OF THE DAYTIME RUNNING LIGHT RELAY (MAIN). IF THE PARKING BRAKE LEVER IS PULLED UP (PARKING BRAKE SW ON) AT THIS TIME, THE DAYTIME RUNNING LIGHT SYSTEM DOES NOT OPERATE. WHEN THE PARKING BRAKE IS RELEASED (PARKING BRAKE SW OFF), A SIGNAL IS OUTPUT FROM **TERMINAL 1** OF THE PARKING BRAKE SW TO **TERMINAL 8** OF THE DAYTIME RUNNING LIGHT RELAY (MAIN). THIS ACTIVATES THE DAYTIME RUNNING LIGHT RELAY (MAIN), TURNING ON THE DIMMER RELAY (DAYTIME RUNNING LIGHT RELAY NO. 2). CURRENT ALSO FLOWS FROM THE MAIN FUSE TO DIMMER RELAY (DAYTIME RUNNING LIGHT RELAY NO. 2) (POINT SIDE) → **HEAD (LH–UPR)** FUSE → HEADLIGHT HI LH → HEADLIGHT HI RH → **TERMINAL (A)5** OF DAYTIME RUNNING LIGHT RELAY NO. 3 → **TERMINAL (A)3** → **GROUND**, CAUSING THE HEADLIGHTS TO LIGHT UP AT APPROX. **20 %** OF THEIR NORMAL BRIGHTNESS.

ONCE THE DAYTIME RUNNING LIGHT RELAY (MAIN) HAS BEEN ACTIVATED AND THE HEADLIGHTS LIGHT UP, THE HEADLIGHTS REMAIN ON EVEN IF THE PARKING BRAKE LEVER IS ENGAGED AGAIN (PARKING BRAKE SW ON).

2. HEADLIGHT OPERATION

WHEN THE LIGHT CONTROL SW IS AT **HEAD** POSITION AND THE DIMMER SW AT **LOW** POSITION, CURRENT FLOWS FROM THE HEADLIGHT RELAY (COIL SIDE) TO **TERMINAL 6** OF THE INTEGRATION RELAY → **TERMINAL 7** → **TERMINAL 13** OF LIGHT CONTROL SW → **TERMINAL 11** → **GROUND**, ACTIVATING THE HEADLIGHT RELAY.

THIS CAUSES CURRENT TO FLOW FROM THE HEADLIGHT RELAY (POINT SIDE) TO THE **HEAD LWR** FUSE → HEADLIGHT LO → **GROUND**, CAUSING THE HEADLIGHTS TO LIGHT UP AT NORMAL BRIGHTNESS. SIMULTANEOUSLY, CURRENT FLOWS FROM THE **DRL** FUSE → DAYTIME RUNNING LIGHT RELAY NO. 3 (COIL SIDE) → **GROUND**, ACTIVATING RELAY NO. 3.

WHEN THE DIMMER SW IS AT **HIGH** POSITION, **TERMINAL 12** OF THE DIMMER SW OUTPUTS A SIGNAL TO **TERMINAL 16** OF THE DAYTIME RUNNING LIGHT RELAY (MAIN) TO ACTIVATE IT. THIS TURNS ON DIMMER RELAY (DAYTIME RUNNING LIGHT RELAY NO. 2). SO CURRENT FLOWS FROM DIMMER RELAY (DAYTIME RUNNING LIGHT RELAY NO. 2) (POINT SIDE) TO THE **HEAD (LH–UPR)** FUSE → HEADLIGHT HI LH → DAYTIME RUNNING LIGHT RELAY NO. 3 (POINT SIDE) → **GROUND**, AND FROM THE **HEAD (RH–UPR)** FUSE → DAYTIME RUNNING LIGHT RELAY NO. 3 (POINT SIDE) → HEADLIGHT HI RH → DAYTIME RUNNING LIGHT RELAY NO. 3 (POINT SIDE) → **GROUND**, CAUSING THE HEADLIGHTS TO OPERATE AT HI.

WHEN THE DIMMER SW IS AT **FLASH** POSITION, CURRENT FROM THE HEADLIGHT RELAY (COIL SIDE) FLOWS TO **TERMINAL 14** OF THE DIMMER SW → **TERMINAL 9** → **GROUND**, ACTIVATING THE RELAY. SIMULTANEOUSLY, CURRENT FROM THE HEADLIGHT RELAY (POINT SIDE) FLOWS TO HEADLIGHT LO, LIGHTING UP HEADLIGHT LO AND ACTIVATING DAYTIME RUNNING LIGHT RELAY NO. 3. THEN **TERMINAL 12** OF THE DIMMER SW OUTPUTS A SIGNAL TO **TERMINAL 16** OF THE DAYTIME RUNNING LIGHT RELAY (MAIN), ACTIVATING THE DAYTIME RUNNING LIGHT RELAY (MAIN) SO THAT CURRENT FLOWS TO HEADLIGHT HI LIKE IT DOES FOR **HIGH** POSITION. THIS CAUSES ALL HEADLIGHTS TO LIGHT UP.

SERVICE HINTS

D 6 DAYTIME RUNNING LIGHT RELAY (MAIN)

15–GROUND : ALWAYS APPROX. **12** VOLTS
2–GROUND : APPROX. **12** VOLTS WITH THE IGNITION SW AT **ON** POSITION
13–GROUND : ALWAYS CONTINUOUS
5–GROUND : APPROX. **12** VOLTS WITH THE DAYTIME RUNNING LIGHT SYSTEM DOES NOT OPERATE OR LIGHT CONTROL SW AT **OFF** OR **TAIL** POSITION (WITH THE CONNECTOR IS DISCONNECTED, ALWAYS APPROX. **12** VOLTS)
8–GROUND : CONTINUOUS WITH THE PARKING BRAKE LEVER RELEASED

HEADLIGHT (FOR CANADA)

: PARTS LOCATION

CODE		SEE PAGE	CODE	SEE PAGE	CODE	SEE PAGE
B 2		24 (2JZ–GTE)	**D 6**	28	**H 4**	24 (2JZ–GTE)
C12		28	**G 2**	24 (2JZ–GTE)	**I20**	29
C13		28	**H 1**	24 (2JZ–GTE)	**P 5**	29
D 2	A	24	**H 2**	24 (2JZ–GTE)		
D 3	B	24	**H 3**	24 (2JZ–GTE)		

: RELAY BLOCKS

CODE	SEE PAGE	RELAY BLOCKS (RELAY BLOCK LOCATION)
2	22	R/B NO. 2 (ENGINE COMPARTMENT LEFT)
4	23	R/B NO. 4 (LEFT KICK PANEL)

: JUNCTION BLOCK AND WIRE HARNESS CONNECTOR

CODE	SEE PAGE	JUNCTION BLOCK AND WIRE HARNESS (CONNECTOR LOCATION)
1B	20	ENGINE ROOM MAIN WIRE AND J/B NO. 1 (LEFT KICK PANEL)
1H	20	COWL WIRE AND J/B NO. 1 (LEFT KICK PANEL)
1J		
1K		
2A	22	BATTERY AND J/B NO. 2 (ENGINE COMPARTMENT LEFT)
2B	22	ENGINE ROOM MAIN WIRE AND J/B NO. 2 (ENGINE COMPARTMENT LEFT)

: CONNECTOR JOINING WIRE HARNESS AND WIRE HARNESS

CODE	SEE PAGE	JOINING WIRE HARNESS AND WIRE HARNESS (CONNECTOR LOCATION)
IB1	36	ENGINE ROOM MAIN WIRE AND COWL WIRE (LEFT KICK PANEL)
IB2		
IB3		
IB5	36	ENGINE ROOM MAIN WIRE AND COWL WIRE (RIGHT KICK PANEL)
IF1	36	INSTRUMENT PANEL WIRE AND COWL WIRE (INSTRUMENT PANEL REINFORCEMENT LH)
IF2		
II1	36	ENGINE WIRE AND INSTRUMENT PANEL WIRE (RIGHT KICK PANEL)

: GROUND POINTS

CODE	SEE PAGE	GROUND POINTS LOCATION
EA	32 (2JZ–GTE)	FRONT SIDE OF RIGHT FENDER
EB	32 (2JZ–GTE)	FRONT SIDE OF LEFT FENDER
IE	36	LEFT KICK PANEL
IG	36	RIGHT KICK PANEL

: SPLICE POINTS

CODE	SEE PAGE	WIRE HARNESS WITH SPLICE POINTS	CODE	SEE PAGE	WIRE HARNESS WITH SPLICE POINTS
E 1	32	ENGINE ROOM MAIN WIRE	**E 8**	32	ENGINE ROOM MAIN WIRE
E 2			**I 2**	38	COWL WIRE
E 7			**I 4**		

B 2 GRAY



C12

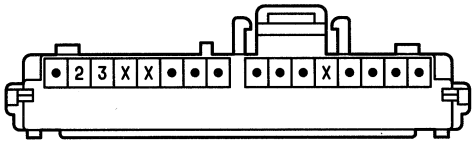

C13 BLACK

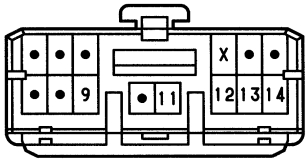

D 2 (A) GRAY

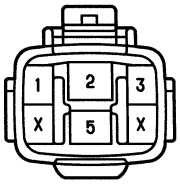

D 3 (B) GRAY



D 6 GRAY

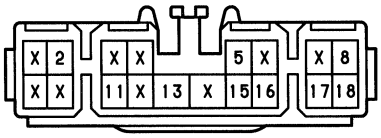

G 2 BLACK

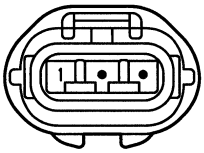

H 1 BLACK



H 2 BLACK



H 3 BROWN



H 4 BROWN



I20

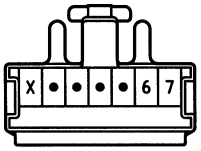

P 5



TAILLIGHT

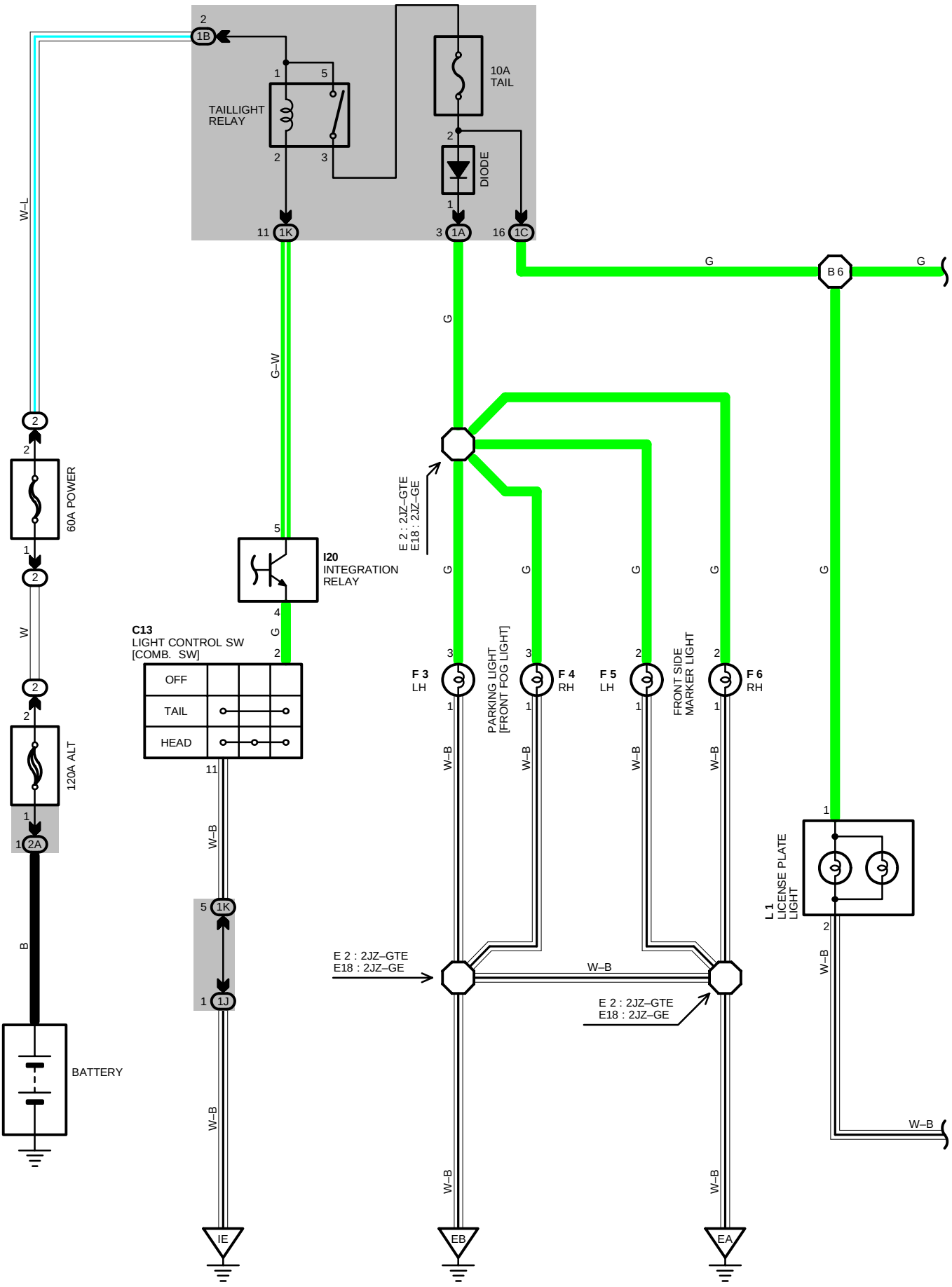
2
1B
1
5
TAILLIGHT
RELAY
2
3
10A
TAIL
2
DIODE
1
11
1K
3
1A
16
1C
W–L
G
B 6
G
G
G–W
2
2
60A POWER
1
2
W
2
2
120A ALT
1
1
2A
B
BATTERY
5
I20
INTEGRATION
RELAY
4
G
C13
LIGHT CONTROL SW
[COMB. SW]
2
OFF
TAIL
HEAD
11
W–B
5
1K
1
1J
W–B
IE
E 2 : 2JZ–GTE
E18 : 2JZ–GE
G
G
G
G
G
F 3
LH
3
1
F 4
RH
3
1
PARKING LIGHT
[FRONT FOG LIGHT]
F 5
LH
2
1
F 6
RH
2
1
FRONT SIDE
MARKER LIGHT
W–B
W–B
W–B
W–B
E 2 : 2JZ–GTE
E18 : 2JZ–GE
W–B
E 2 : 2JZ–GTE
E18 : 2JZ–GE
W–B
W–B
EB
EA
1
L 1
LICENSE PLATE
LIGHT
2
W–B
W–B

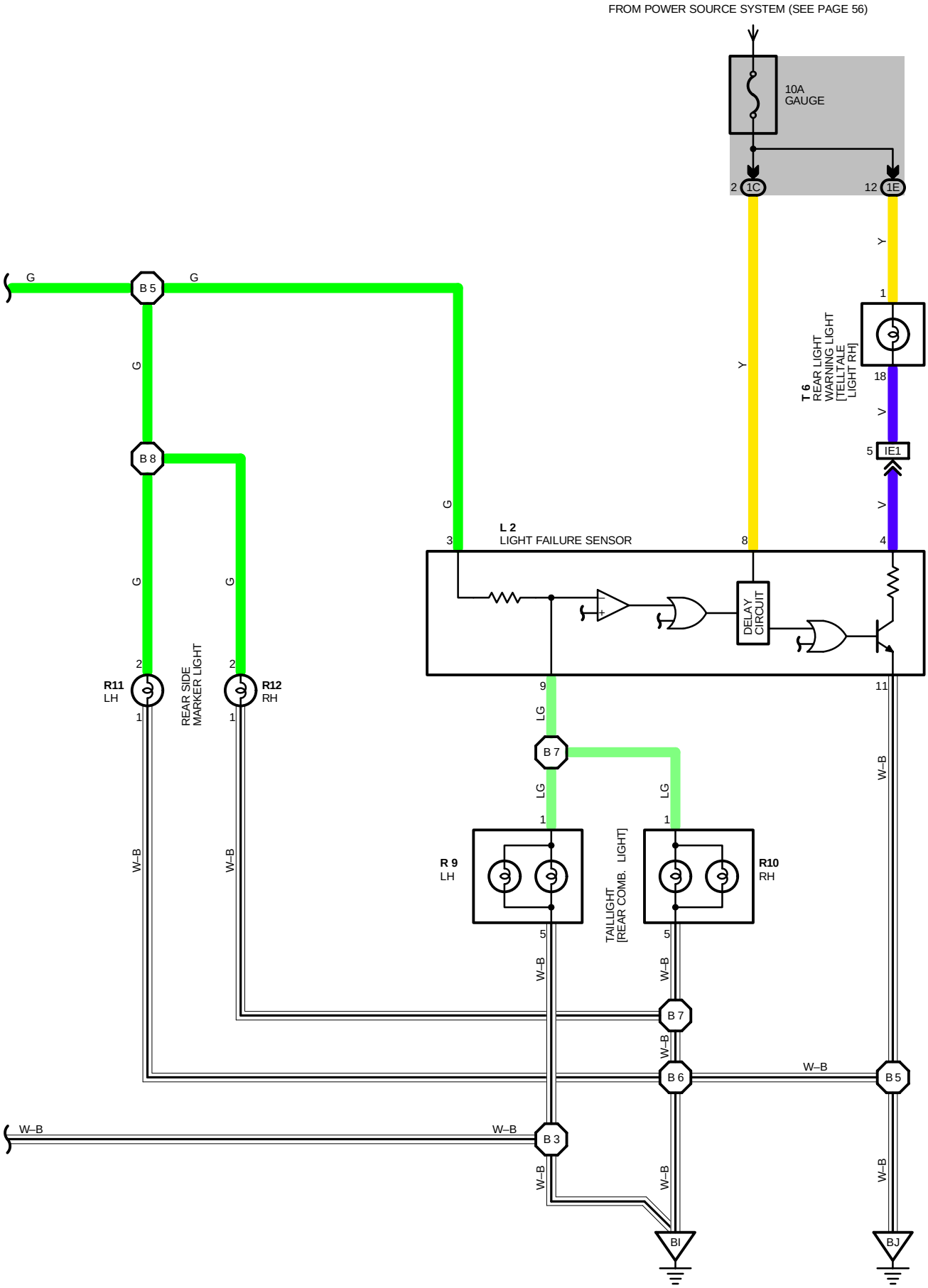
FROM POWER SOURCE SYSTEM (SEE PAGE 56)
10A
GAUGE
2 1C
12 1E
Y
1
T 6
REAR LIGHT
WARNING LIGHT
[TELLTALE
LIGHT RH]
18
V
5 IE1
V
G
B 5
G
G
B 8
G
G
G
L 2
LIGHT FAILURE SENSOR
3
8
4
DELAY
CIRCUIT
2
R11
LH
1
REAR SIDE
MARKER LIGHT
2
R12
RH
1
9
11
LG
B 7
LG
LG
W–B
1
1
R 9
LH
TAILLIGHT
[REAR COMB. LIGHT]
R10
RH
5
5
W–B
W–B
W–B
W–B
B 7
W–B
B 6
W–B
B 5
W–B
W–B
B 3
W–B
W–B
W–B
BI
BJ

TAILLIGHT

SYSTEM OUTLINE

WHEN THE LIGHT CONTROL SW IS TURNED TO **TAIL** OR **HEAD** POSITION. THE CURRENT FLOWS TO **TERMINAL 3** OF THE LIGHT FAILURE SENSOR THROUGH THE **TAIL** FUSE.

WHEN THE IGNITION SW IS TURNED ON, THE CURRENT FLOWS FROM THE **GAUGE** FUSE TO **TERMINAL 8** OF THE LIGHT FAILURE SENSOR, ANO ALSO FLOWS THROUGH THE REAR LIGHT WARNING LIGHT TO **TERMINAL 4** OF THE LIGHT FAILURE SENSOR.

TAILLIGHT DISCONNECTION WARNING

WITH THE IGNITION SW ON AND THE LIGHT CONTROL SW TURNED TO **TAIL** OR **HEAD** POSITION, IF THE TAILLIGHT CIRCUIT IS OPEN, THE LIGHT FAILURE SENSOR DETECTS THE FAILURE BY THE CHANGE IN CURRENT FLOWING FROM **TERMINAL 3** OF THE LIGHT FAILURE SENSOR TO **TERMINAL 9**, AND THE WARNING CIRCUIT OF THE LIGHT FAILURE SENSOR IS ACTIVATED.

AS A RESULT, THE CURRENT FLOWS FROM **TERMINAL 4** OF THE LIGHT FAILURE SENSOR → **TERMINAL 11** → **GROUND** AND TURNS THE REAR LIGHT WARNING LIGHT ON, WHICH REMAINS ON UNTIL THE LIGHT CONTROL SW IS TURNED OFF.

SERVICE HINTS

TAILLIGHT RELAY

5–3: CLOSED WITH LIGHT CONTROL SW AT **TAIL** OR **HEAD** POSITION

L 2 LIGHT FAILURE SENSOR

4, 8–GROUND: APPROX. **12** VOLTS WITH IGNITION SW AT **ON** POSITION

3–GROUND: APPROX. **12** VOLTS WITH LIGHT CONTROL SW AT **TAIL** OR **HEAD** POSITION

11–GROUND: ALWAYS CONTINUOUS

: PARTS LOCATION

CODE	SEE PAGE	CODE	SEE PAGE	CODE	SEE PAGE
C13	28	**F 5**	26 (2JZ–GE)	**R 9**	30
F 3	24 (2JZ–GTE)	**F 6**	24 (2JZ–GTE)	**R10**	30
	26 (2JZ–GE)		26 (2JZ–GE)	**R11**	30
F 4	24 (2JZ–GTE)	**I20**	29	**R12**	30
	26 (2JZ–GE)	**L 1**	30	**T 6**	29
F 5	24 (2JZ–GTE)	**L 2**	30		

: RELAY BLOCKS

CODE	SEE PAGE	RELAY BLOCKS (RELAY BLOCK LOCATION)
2	22	R/B NO. 2 (ENGINE COMPARTMENT LEFT)

: JUNCTION BLOCK AND WIRE HARNESS CONNECTOR

CODE	SEE PAGE	JUNCTION BLOCK AND WIRE HARNESS (CONNECTOR LOCATION)
1A	20	ENGINE ROOM MAIN WIRE AND J/B NO. 1 (LEFT KICK PANEL)
1B		
1C	20	FLOOR NO. 2 WIRE AND J/B NO. 1 (LEFT KICK PANEL)
1E	20	INSTRUMENT PANEL WIRE AND J/B NO. 1 (LEFT KICK PANEL)
1J	20	COWL WIRE AND J/B NO. 1 (LEFT KICK PANEL)
1K		
2A	22	BATTERY AND J/B NO. 2 (ENGINE COMPARTMENT LEFT)

: CONNECTOR JOINING WIRE HARNESS AND WIRE HARNESS

CODE	SEE PAGE	JOINING WIRE HARNESS AND WIRE HARNESS (CONNECTOR LOCATION)
IE1	36	INSTRUMENT PANEL WIRE AND FLOOR NO. 2 WIRE (LEFT KICK PANEL)

: GROUND POINTS

CODE	SEE PAGE	GROUND POINTS LOCATION
EA	32 (2JZ–GTE)	FRONT SIDE OF RIGHT FENDER
	34 (2JZ–GE)	
EB	32 (2JZ–GTE)	FRONT SIDE OF LEFT FENDER
	34 (2JZ–GE)	
IE	36	LEFT KICK PANEL
BI	40	LEFT QUARTER PILLAR
BJ	40	LOWER BACK PANEL CENTER

: SPLICE POINTS

CODE	SEE PAGE	WIRE HARNESS WITH SPLICE POINTS	CODE	SEE PAGE	WIRE HARNESS WITH SPLICE POINTS
E 2	32	ENGINE ROOM MAIN WIRE	B 6	40	FLOOR NO. 2 WIRE
E18	34		B 7		
B 3	40	FLOOR NO. 2 WIRE	B 8		
B 5					

C13 BLACK

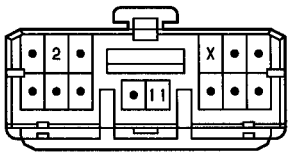

F 3 GRAY

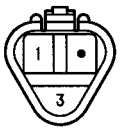

F 4 GRAY

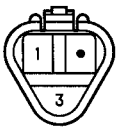

F 5 GRAY



F 6 GRAY



I20

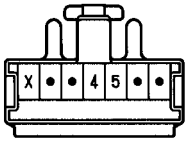

L 1 GRAY



L 2

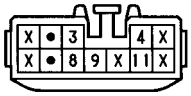

R 9

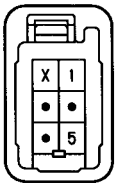

R10

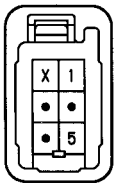

R11 GRAY



R12 GRAY



T 6

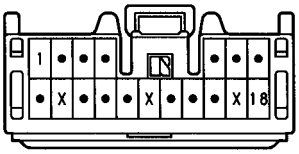

FOG LIGHT

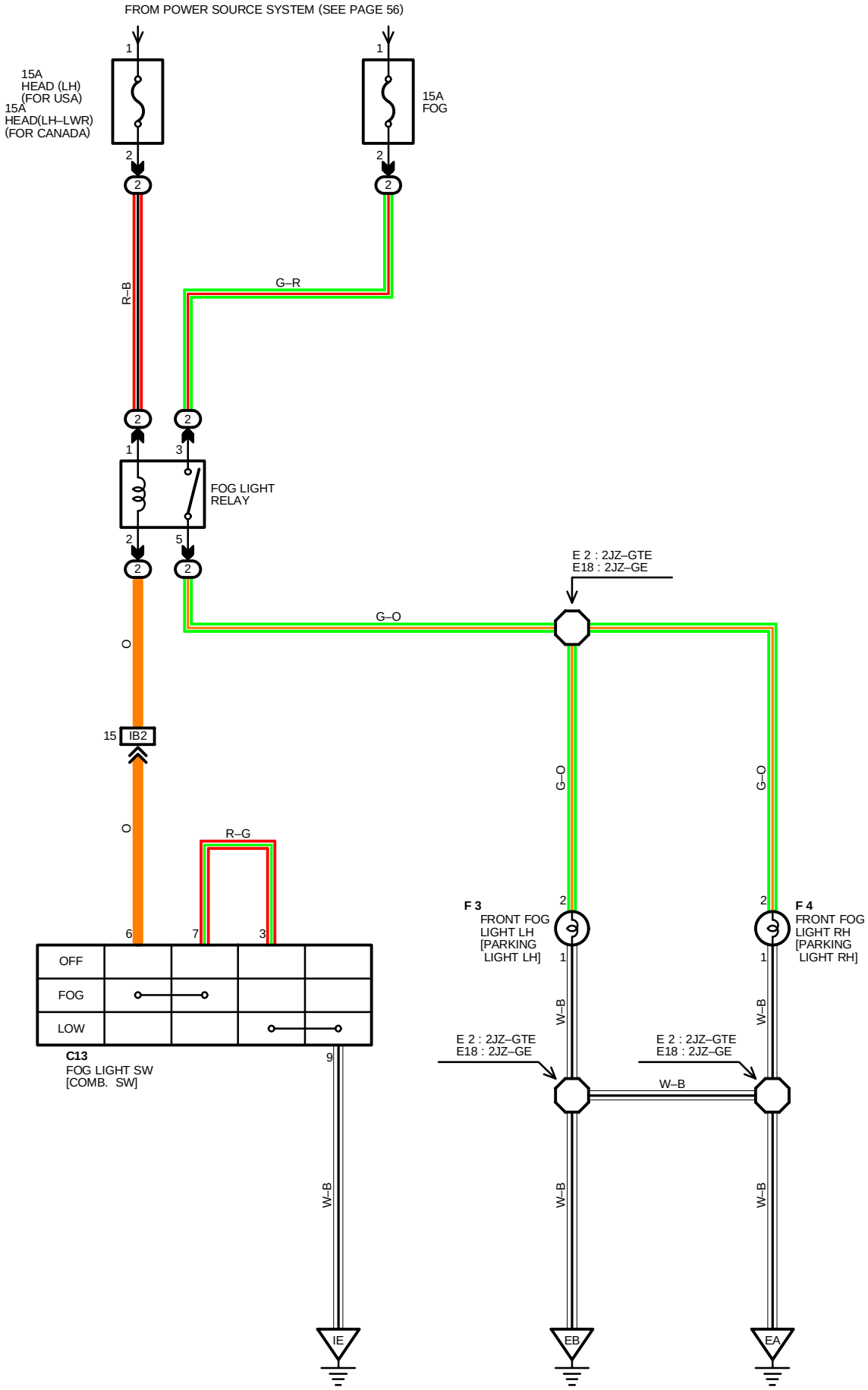
FROM POWER SOURCE SYSTEM (SEE PAGE 56)
15A
HEAD (LH)
(FOR USA)
15A
HEAD(LH–LWR)
(FOR CANADA)
15A
FOG
R–B
G–R
FOG LIGHT
RELAY
E 2 : 2JZ–GTE
E18 : 2JZ–GE
G–O
O
15 IB2
O
R–G
G–O
G–O
F 3
FRONT FOG
LIGHT LH
[PARKING
LIGHT LH]
F 4
FRONT FOG
LIGHT RH
[PARKING
LIGHT RH]
OFF
FOG
LOW
C13
FOG LIGHT SW
[COMB. SW]
W–B
W–B
W–B
E 2 : 2JZ–GTE
E18 : 2JZ–GE
E 2 : 2JZ–GTE
E18 : 2JZ–GE
W–B
W–B
W–B
IE
EB
EA

SERVICE HINTS

FOG LIGHT RELAY

(2) 3–**(2)** 5 : CLOSED WITH LIGHT CONTROL SW AT **HEAD** POSITION, DIMMER SW AT **LOW** POSITION AND FOG LIGHT SW **ON** POSITION

: PARTS LOCATION

CODE	SEE PAGE	CODE	SEE PAGE	CODE	SEE PAGE
C13	28	**F 3**	26 (2JZ–GE)	**F 4**	26 (2JZ–GE)
F 3	24 (2JZ–GTE)	**F 4**	24 (2JZ–GTE)		

: RELAY BLOCKS

CODE	SEE PAGE	RELAY BLOCKS (RELAY BLOCK LOCATION)
2	22	R/B NO. 2 (ENGINE COMPARTMENT LEFT)

: CONNECTOR JOINING WIRE HARNESS AND WIRE HARNESS

CODE	SEE PAGE	JOINING WIRE HARNESS AND WIRE HARNESS (CONNECTOR LOCATION)
IB2	36	ENGINE ROOM MAIN WIRE AND COWL WIRE (LEFT KICK PANEL)

: GROUND POINTS

CODE	SEE PAGE	GROUND POINTS LOCATION
EA	32 (2JZ–GTE)	FRONT SIDE OF RIGHT FENDER
	34 (2JZ–GE)	
EB	32 (2JZ–GTE)	FRONT SIDE OF LEFT FENDER
	34 (2JZ–GE)	
IE	36	LEFT KICK PANEL

: SPLICE POINTS

CODE	SEE PAGE	WIRE HARNESS WITH SPLICE POINTS	CODE	SEE PAGE	WIRE HARNESS WITH SPLICE POINTS
E 2	32	ENGINE ROOM MAIN WIRE	**E18**	34	ENGINE ROOM MAIN WIRE

C13 BLACK

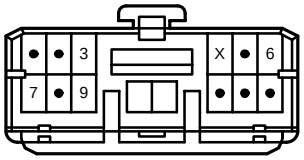

F 3 GRAY



F 4 GRAY



LIGHT AUTO TURN OFF

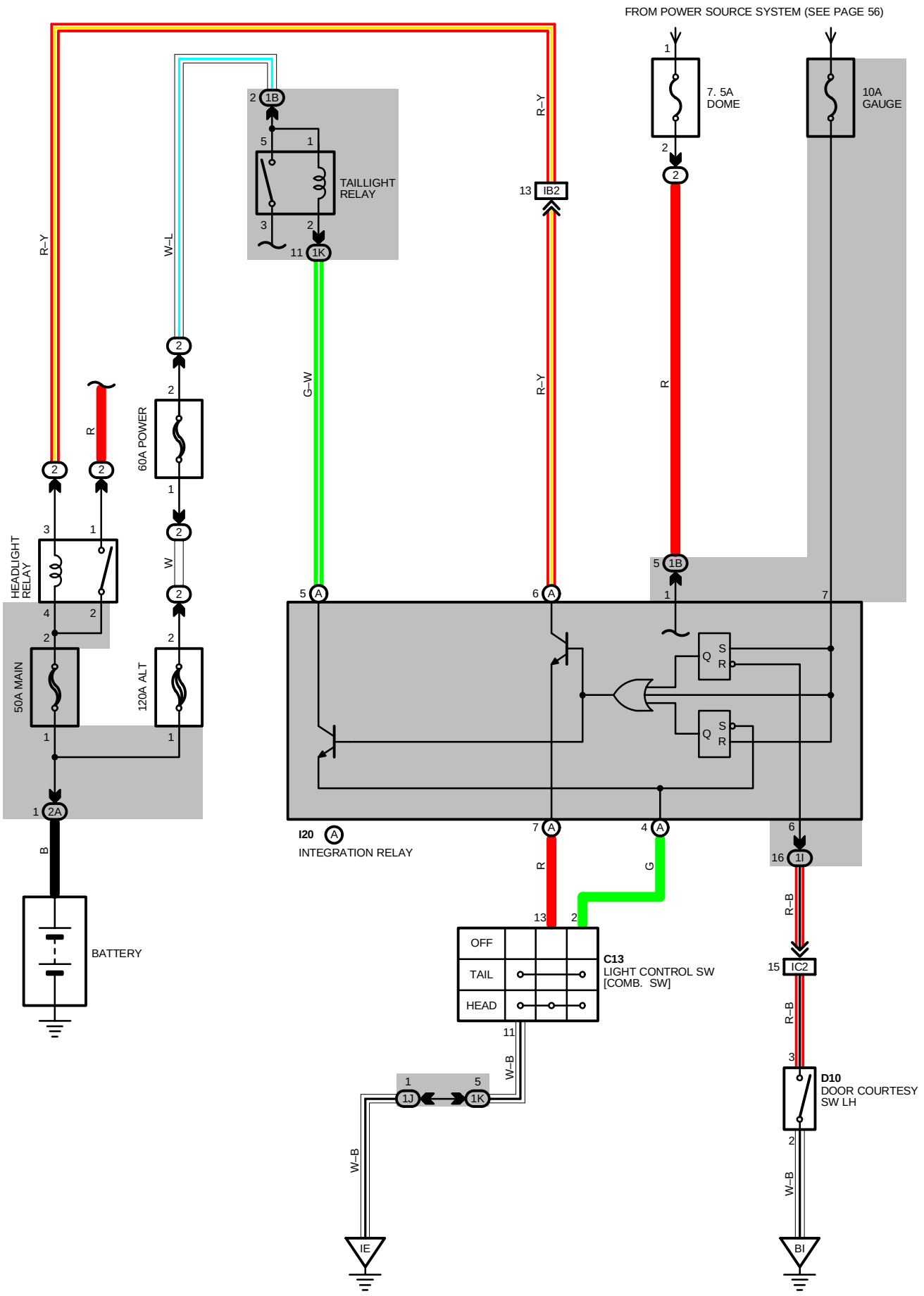

SYSTEM OUTLINE

WITH THE IGNITION SW TURNED ON, THE CURRENT FLOWS TO **TERMINAL 7** OF THE INTEGRATION RELAY THROUGH **GAUGE** FUSE.

VOLTAGE IS APPLIED AT ALL TIMES TO **TERMINAL (A) 5** OF THE INTEGRATION RELAY THROUGH THE TAILLIGHT RELAY COIL, AND TO **TERMINAL (A) 6** THROUGH THE HEADLIGHT RELAY COIL.

1. NORMAL LIGHTING OPERATION

(TURN TAILLIGHT ON)

WITH LIGHT CONTROL SW TURNED TO **TAIL** POSITION, A SIGNAL IS INPUT INTO **TERMINAL (A) 4** OF THE INTEGRATION RELAY. DUE TO THIS SIGNAL, THE CURRENT FLOWING TO **TERMINAL (A) 5** OF THE RELAY FLOWS TO **TERMINAL (A) 4** → **TERMINAL 2** OF THE LIGHT CONTROL SW → **TERMINAL 11** → TO **GROUND**, AND TAILLIGHT RELAY CAUSES TAILLIGHTS TO TURN ON.

(TURN HEADLIGHT ON)

WITH LIGHT CONTROL SW TURNED TO **HEAD** POSITION, A SIGANL IS INPUT INTO **TERMINAL (A) 4** AND **(A) 7** OF THE INTEGRATION RELAY. DUE TO THIS SIGNAL, THE CURRENT FLOWING TO **TERMINAL (A) 6** OF THE RELAY FLOWS TO **TERMINAL (A) 7** → **TERMINAL 13** OF THE LIGHT CONTROL SW → **TERMINAL 11** → TO **GROUND** IN THE HEADLIGHT CIRCUIT, AND CAUSES TAILLIGHT AND HEADLIGHT RELAY TO TURN THE LIGHTS ON. THE TAILLIGHT CIRCUIT IS SAME AS ABOVE.

2. LIGHT AUTO TURN OFF OPERATION

WITH LIGHT ON AND THE IGNITION SW TURNED OFF (INPUT SIGNAL GOES TO **TERMINAL 7** OF THE RELAY), WHEN THE DRIVER'S DOOR IS OPENED (INPUT SIGNAL GOES TO **TERMINAL 6** OF THE RELAY), THE RELAY OPERATES AND THE CURRENT IS CUT OFF WHICH FLOWS FROM **TERMINAL (A) 5** OF THE RELAY TO **TERMINAL (A) 4** IN TAILLIGHT CIRCUIT AND FROM **TERMINAL (A) 6** TO **TERMINAL (A) 7** IN HEADLIGHT CIRCUIT.

AS A RESULT, ALL LIGHTS ARE TURNED OFF AUTOMATICALLY.

SERVICE HINTS

HEADLIGHT RELAY

2 1– : CLOSED WITH LIGHT CONTROL SW AT **HEAD** POSITION OR DIMMER SW AT **FLASH** POSITION (FOR USA)
: CLOSED WITH ENGINE RUNNING AND PARKING BRAKE LEVER RELEASED (FOR CANADA)

TAILLIGHT RELAY

3–5 : CLOSED WITH LIGHT CONTROL SW AT **TAIL** OR **HEAD** POSITION

D10 DOOR COURTESY SW LH

3–2 : CLOSED WITH LH DOOR OPEN

I20(A) INTEGRATION RELAY

7–GROUND : APPROX. **12** VOLTS WITH IGNITION SW AT **ON** POSITION
6–GROUND : CONTINUOUS WITH LH DOOR OPEN
1–GROUND : ALWAYS APPROX. **12** VOLTS
(A) 5–GROUND : ALWAYS APPROX. **12** VOLTS
(A) 6–GROUND : ALWAYS APPROX. **12** VOLTS
(A) 7–GROUND : CONTINUOUS WITH LIGHT CONTROL SW AT **HEAD** POSITION
(A) 4–GROUND : CONTINUOUS WITH LIGHT CONTROL SW AT **TAIL** OR **HEAD** POSITION

: PARTS LOCATION

CODE	SEE PAGE	CODE	SEE PAGE	CODE		SEE PAGE
C13	28	**D10**	30	**I20**	A	29

: RELAY BLOCKS

CODE	SEE PAGE	RELAY BLOCKS (RELAY BLOCK LOCATION)
2	22	R/B NO. 2 (ENGINE COMPARTMENT LEFT

: JUNCTION BLOCK AND WIRE HARNESS CONNECTOR

CODE	SEE PAGE	JUNCTION BLOCK AND WIRE HARNESS (CONNECTOR LOCATION)
1B	20	ENGINE ROOM MAIN WIRE AND J/B NO. 1 (LEFT KICK PANEL)
1I	20	COWL WIRE AND J/B NO. 1 (LEFT KICK PANEL)
1J		
1K		
2A	22	BATTERY AND J/B NO. 2 (ENGINE COMPARTMENT LEFT)

LIGHT AUTO TURN OFF

: CONNECTOR JOINING WIRE HARNESS AND WIRE HARNESS

CODE	SEE PAGE	JOINING WIRE HARNESS AND WIRE HARNESS (CONNECTOR LOCATION)
IB2	36	ENGINE ROOM MAIN WIRE AND COWL WIRE (LEFT KICK PANEL)
IC2	36	FLOOR NO. 2 WIRE AND COWL WIRE (LEFT KICK PANEL)

: GROUND POINTS

CODE	SEE PAGE	GROUND POINTS LOCATION
IE	36	LEFT KICK PANEL
BI	40	LEFT QUARTER PILLAR

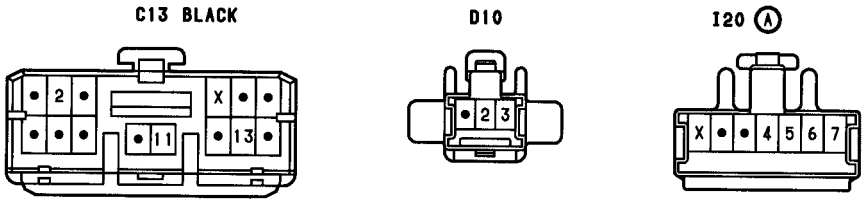

C10 (B) BLUE

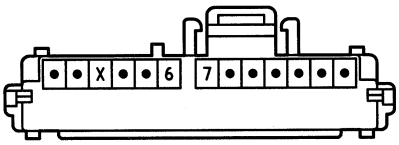

(2JZ-GTE) C12 (A)

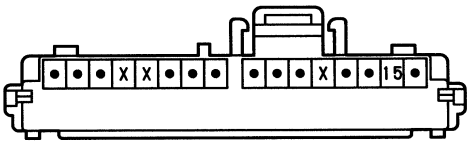

(2JZ-GE) C12 (A)

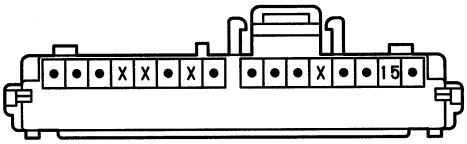

C13 BLACK

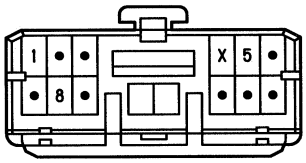

F 7 GRAY

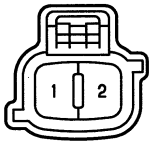

F 8 GRAY



H10 BLACK

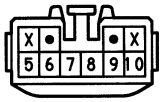

J 1

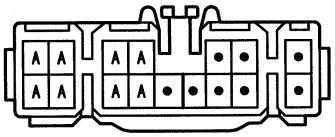

(HINT:SEE PAGE 7)

R 9

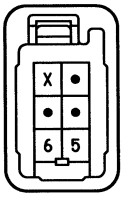

R10

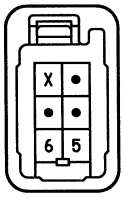

TURN SIGNAL AND HAZARD WARNING LIGHT

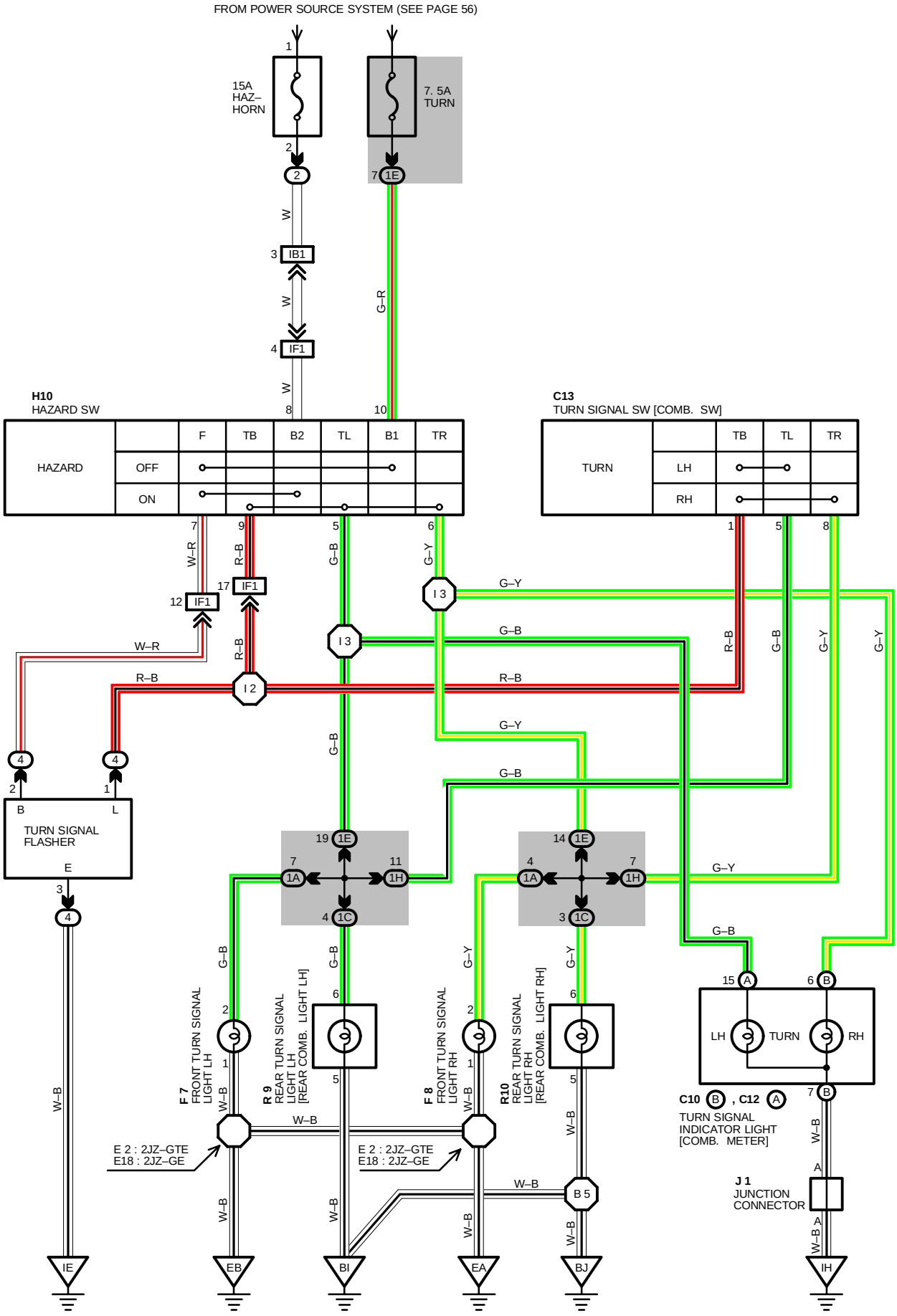

SERVICE HINTS

TURN SIGNAL FLASHER

(4) 1–GROUND : CHANGES FROM APPROX.**12** VOLTS TO **0** VOLTS WITH IGNITION SW ON AND TURN SIGNAL SW LEFT OR RIGHT, OR WITH HAZARD WARNING SW ON

(4) 2–GROUND : APPROX. **12** VOLTS WITH IGNITION SW ON OR HAZARD WARNING SW ON

(4) 3–GROUND: ALWAYS CONTINUOUS

: PARTS LOCATION

CODE		SEE PAGE	CODE	SEE PAGE	CODE	SEE PAGE
C10	B	28	**F 7**	26 (2JZ–GE)	**J 1**	29
C12	A	28	**F 8**	24 (2JZ–GTE)	**R 9**	30
C13		28		26 (2JZ–GE)	**R10**	30
F 7		24 (2JZ–GTE)	**H10**	29		

: RELAY BLOCKS

CODE	SEE PAGE	RELAY BLOCKS (RELAY BLOCK LOCATION)
2	22	R/B NO. 2 (ENGINE COMPARTMENT LEFT)
4	23	R/B NO. 4 (LEFT KICK PANEL)

: JUNCTION BLOCK AND WIRE HARNESS CONNECTOR

CODE	SEE PAGE	JUNCTION BLOCK AND WIRE HARNESS (CONNECTOR LOCATION)
1A	20	ENGINE ROOM MAIN WIRE AND J/B NO. 1 (LEFT KICK PANEL)
1C	20	FLOOR NO. 2 WIRE AND J/B NO. 1 (LEFT KICK PANEL)
1E	20	INSTRUMENT PANEL WIRE AND J/B NO. 1 (LEFT KICK PANEL)
1H	20	COWL WIRE AND J/B NO. 1 (LEFT KICK PANEL)

: CONNECTOR JOINING WIRE HARNESS AND WIRE HARNESS

CODE	SEE PAGE	JOINING WIRE HARNESS AND WIRE HARNESS (CONNECTOR LOCATION)
IB1	36	ENGINE ROOM MAIN WIRE AND COWL WIRE (LEFT KICK PANEL)
IF1	36	INSTRUMENT PANEL WIRE AND COWL WIRE (INSTRUMENT PANEL REINFORCEMENT LH)

: GROUND POINTS

CODE	SEE PAGE	GROUND POINTS LOCATION
EA	32 (2JZ–GTE) 34 (2JZ–GE)	FRONT SIDE OF RIGHT FENDER
EB	32 (2JZ–GTE) 34 (2JZ–GE)	FRONT SIDE OF LEFT FENDER
IE	36	LEFT KICK PANEL
IH	36	RIGHT KICK PANEL
BI	40	LEFT QUARTER PILLAR
BJ	40	LOWER BACK PANEL CENTER

: SPLICE POINTS

CODE	SEE PAGE	WIRE HARNESS WITH SPLICE POINTS	CODE	SEE PAGE	WIRE HARNESS WITH SPLICE POINTS
E 2	32	ENGINE ROOM MAIN WIRE	**I 3**	38	INSTRUMENT PANEL WIRE
E18	34		**B 5**	40	FLOOR NO. 2 WIRE
I 2	38	COWL WIRE			

STOP LIGHT

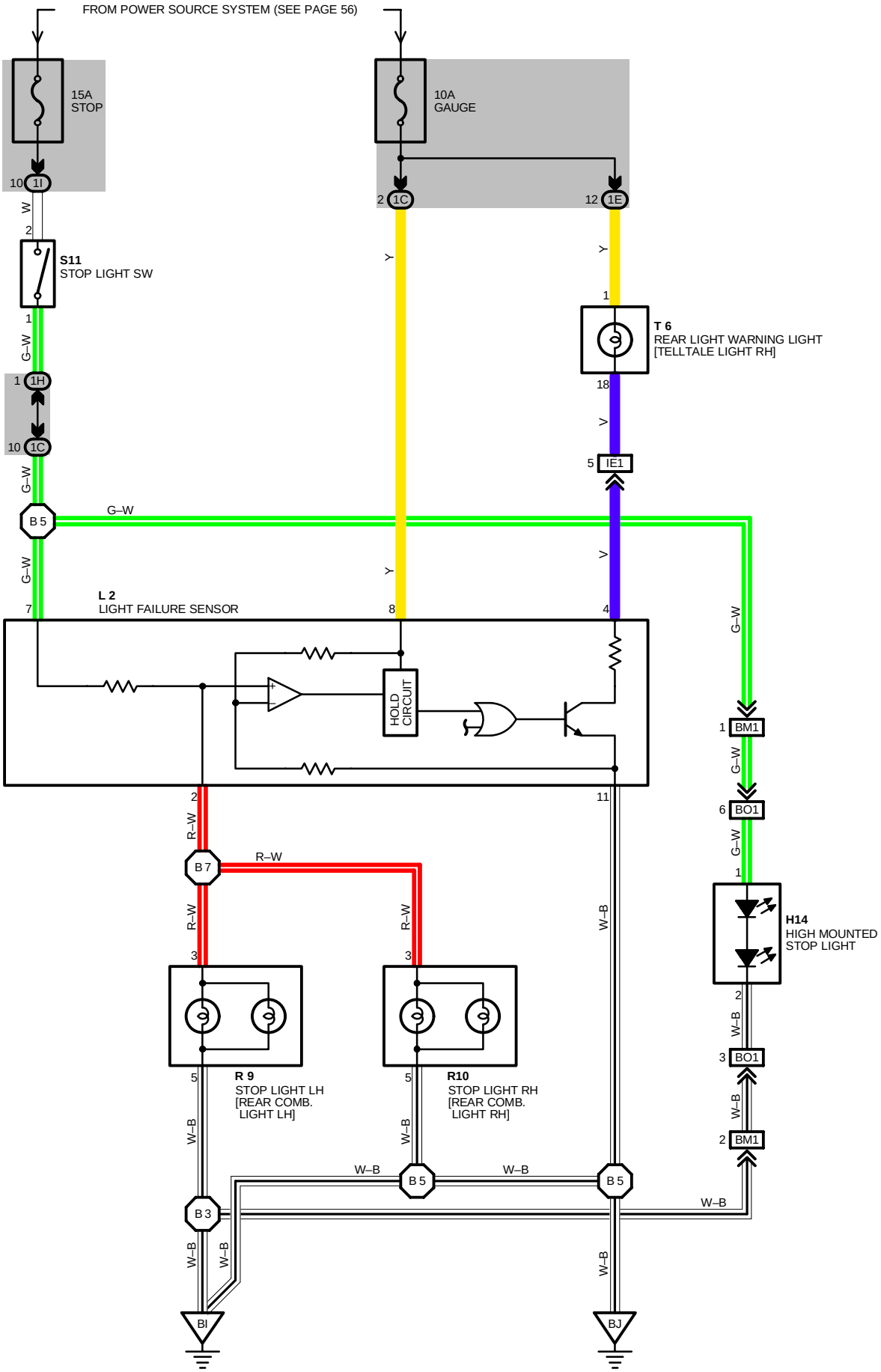
FROM POWER SOURCE SYSTEM (SEE PAGE 56)
15A
STOP
10A
GAUGE
10 1I
2 1C
12 1E
W
2
S11
STOP LIGHT SW
1
G–W
1 1H
10 1C
G–W
B 5
G–W
G–W
7
L 2
LIGHT FAILURE SENSOR
8
4
Y
Y
1
T 6
REAR LIGHT WARNING LIGHT
[TELLTALE LIGHT RH]
18
V
5 IE1
V
HOLD
CIRCUIT
G–W
1 BM1
G–W
6 BO1
G–W
1
H14
HIGH MOUNTED
STOP LIGHT
2
W–B
3 BO1
W–B
2 BM1
2
R–W
B 7
R–W
R–W
3
R–W
3
11
W–B
5
R 9
STOP LIGHT LH
[REAR COMB.
LIGHT LH]
5
R10
STOP LIGHT RH
[REAR COMB.
LIGHT RH]
W–B
W–B
W–B
B 5
B 5
W–B
B 3
W–B
W–B
W–B
BI
BJ

SYSTEM OUTLINE

CURRENT IS APPLIED AT ALL TIMES THROUGH THE **STOP** FUSE TO **TERMINAL 2** OF THE STOP LIGHT SW.

WHEN THE IGNITION SW IS TURNED ON, CURRENT FLOWS FROM THE **GAUGE** FUSE TO **TERMINAL 8** OF THE LIGHT FAILURE SENSOR, AND ALSO FLOWS THROUGH THE REAR LIGHT WARNING LIGHT TO **TERMINAL 4** OF THE LIGHT FAILURE SENSOR.

STOP LIGHT DISCONNECTION WARNING

WHEN THE IGNITION SW IS TURNED ON AND THE BRAKE PEDAL IS PRESSED (STOP LIGHT SW ON), IF THE STOP LIGHT CIRCUIT IS OPEN, THE CURRENT FLOWING FROM **TERMINAL 7** OF THE LIGHT FAILURE SENSOR TO **TERMINAL 2** CHANGES, SO THE LIGHT FAILURE SENSOR DETECTS THE DISCONNECTION AND THE WARNING CIRCUIT OF THE LIGHT FAILURE SENSOR IS ACTIVATED.

AS A RESULT, THE CURRENT FLOWS FROM **TERMINAL 4** OF THE LIGHT FAILURE SENSOR → **TERMINAL 11** → **GROUND** AND TURNS THE REAR LIGHT WARNING LIGHT ON. BY PRESSING THE BRAKE PEDAL, THE CURRENT FLOWING TO **TERMINAL 8** OF THE LIGHT FAILURE SENSOR KEEPS THE WARNING CIRCUIT ON HOLDING AND THE WARNING LIGHT ON UNTIL THE IGNITION SW IS TURNED OFF.

SERVICE HINTS

S11 STOP LIGHT SW
2–1 : CLOSED WITH BRAKE PEDAL DEPRESSED
L 2 LIGHT FAILURE SENSOR
2, 7–GROUND : APPROX. **12** VOLTS WITH STOP LIGHT SW ON
4, 8–GROUND : APPROX. **12** VOLTS WITH IGNITION SW AT **ON** POSITION
11–GROUND : ALWAYS CONTINUOUS

: PARTS LOCATION

CODE	SEE PAGE	CODE	SEE PAGE	CODE	SEE PAGE
H14	30	**R 9**	30	**S11**	29
L 2	30	**R10**	30	**T 6**	29

: JUNCTION BLOCK AND WIRE HARNESS CONNECTOR

CODE	SEE PAGE	JUNCTION BLOCK AND WIRE HARNESS (CONNECTOR LOCATION)
1C	20	FLOOR NO. 2 WIRE AND J/B NO. 1 (LEFT KICK PANEL)
1E	20	INSTRUMENT PANEL WIRE AND J/B NO. 1 (LEFT KICK PANEL)
1H	20	COWL WIRE AND J/B NO. 1 (LEFT KICK PANEL)
1I		

: CONNECTOR JOINING WIRE HARNESS AND WIRE HARNESS

CODE	SEE PAGE	JOINING WIRE HARNESS AND WIRE HARNESS (CONNECTOR LOCATION)
IE1	36	INSTRUMENT PANEL WIRE AND FLOOR NO. 2 WIRE (LEFT KICK PANEL)
BM1	40	BACK DOOR NO. 1 WIRE AND FLOOR NO. 2 WIRE (LEFT SIDE OF PACKAGE TRAY TRIM)
B01	40	BACK DOOR NO. 2 WIRE AND BACK DOOR NO. 1 WIRE (BACK DOOR UPPER LEFT)

: GROUND POINTS

CODE	SEE PAGE	GROUND POINTS LOCATION
BI	40	LEFT QUARTER PILLAR
BJ	40	LOWER BACK PANEL CENTER

: SPLICE POINTS

CODE	SEE PAGE	WIRE HARNESS WITH SPLICE POINTS	CODE	SEE PAGE	WIRE HARNESS WITH SPLICE POINTS
B 3	40	FLOOR NO. 2 WIRE	**B 7**	40	FLOOR NO. 2 WIRE
B 5					

H14



L 2

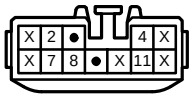

R 9

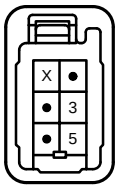

R10

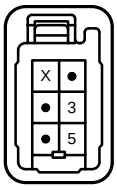

S11 BLUE

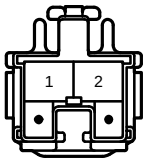

T 6

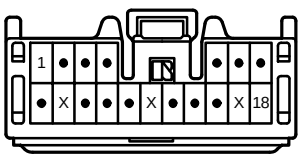

BACK–UP LIGHT

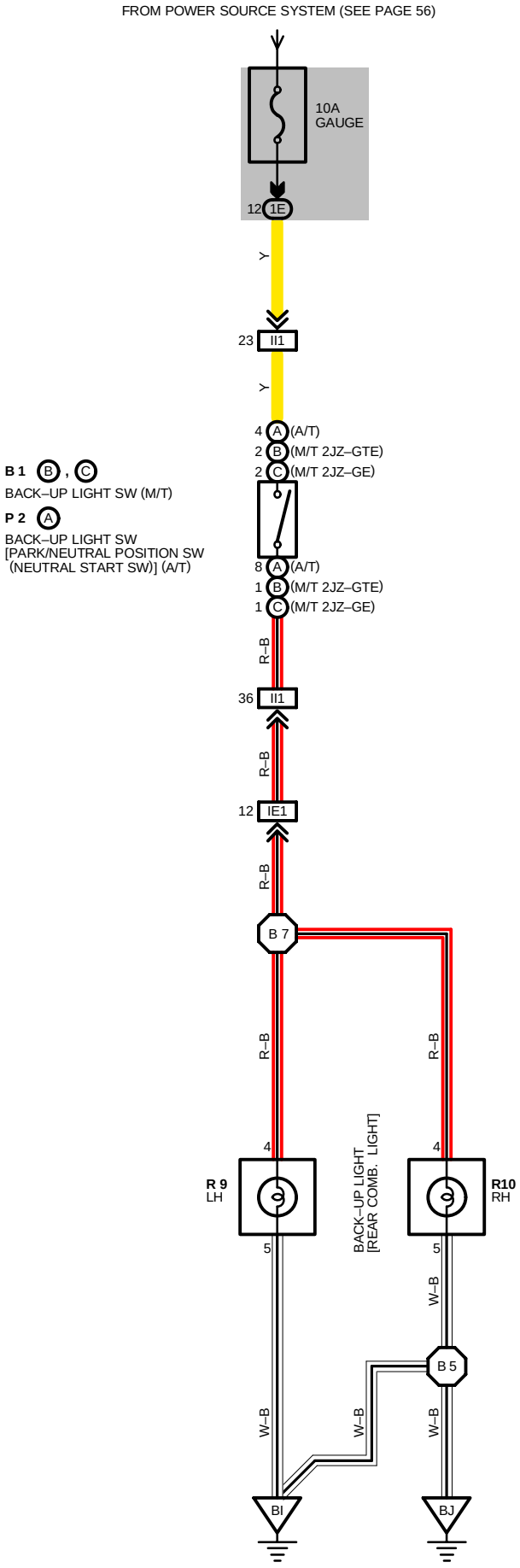

SERVICE HINTS

B 1 (B), (C) BACK–UP LIGHT SW (M/T)
P 2 (A) BACK–UP LIGHT SW [PARK/NEUTRAL POSITION SW (NEUTRAL START SW)] (A/T)
(B), **(C)** 2–1, **(A)** 4–8 : CLOSED WITH SHIFT LEVER IN **R** POSITION

: PARTS LOCATION

CODE		SEE PAGE	CODE		SEE PAGE	CODE	SEE PAGE
B 1	B	24 (2JZ–GTE)	**P 2**	A	25 (2JZ–GTE)	**R 9**	30
	C	26 (2JZ–GE)			27 (2JZ–GE)	**R10**	30

: JUNCTION BLOCK AND WIRE HARNESS CONNECTOR

CODE	SEE PAGE	JUNCTION BLOCK AND WIRE HARNESS (CONNECTOR LOCATION)
1E	20	INSTRUMENT PANEL WIRE AND J/B NO. 1 (LEFT KICK PANEL)

: CONNECTOR JOINING WIRE HARNESS AND WIRE HARNESS

CODE	SEE PAGE	JOINING WIRE HARNESS AND WIRE HARNESS (CONNECTOR LOCATION)
IE1	36	INSTRUMENT PANEL WIRE AND FLOOR NO. 2 WIRE (LEFT KICK PANEL)
II1	38	ENGINE WIRE AND INSTRUMENT PANEL WIRE (RIGHT KICK PANEL)

: GROUND POINTS

CODE	SEE PAGE	GROUND POINTS LOCATION
BI	40	LEFT QUARTER PILLAR
BJ	40	LOWER BACK PANEL CENTER

: SPLICE POINTS

CODE	SEE PAGE	WIRE HARNESS WITH SPLICE POINTS	CODE	SEE PAGE	WIRE HARNESS WITH SPLICE POINTS
B 5	40	FLOOR NO. 2 WIRE	**B 7**	40	FLOOR NO. 2 WIRE

B 1 (B) GRAY

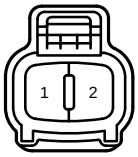

B 1 (C) GRAY



P 2 (A) GRAY

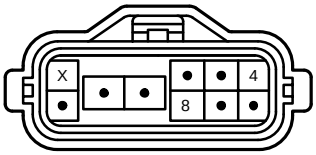

R 9

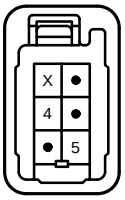

R10

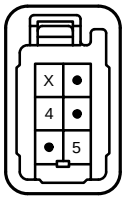

INTERIOR LIGHT

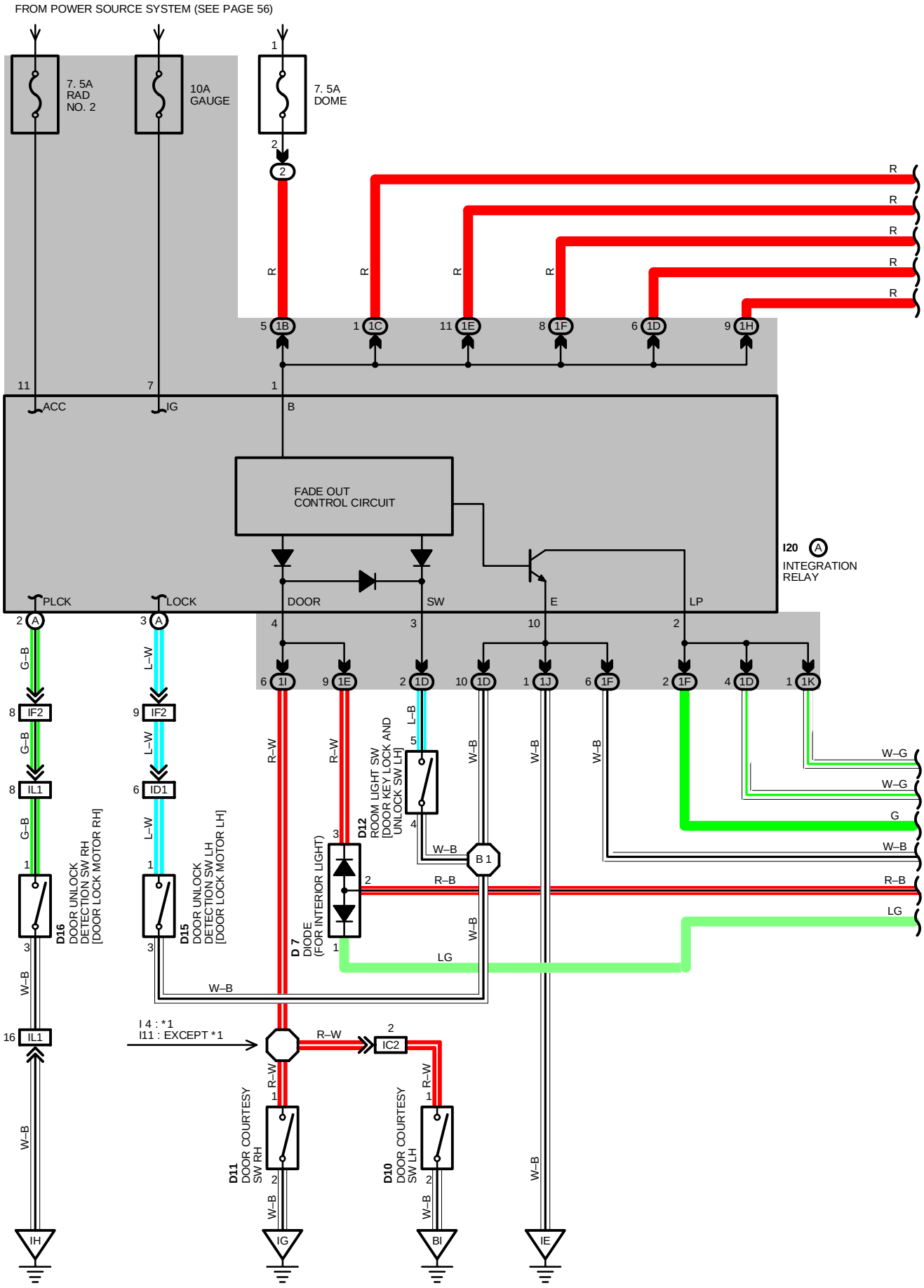

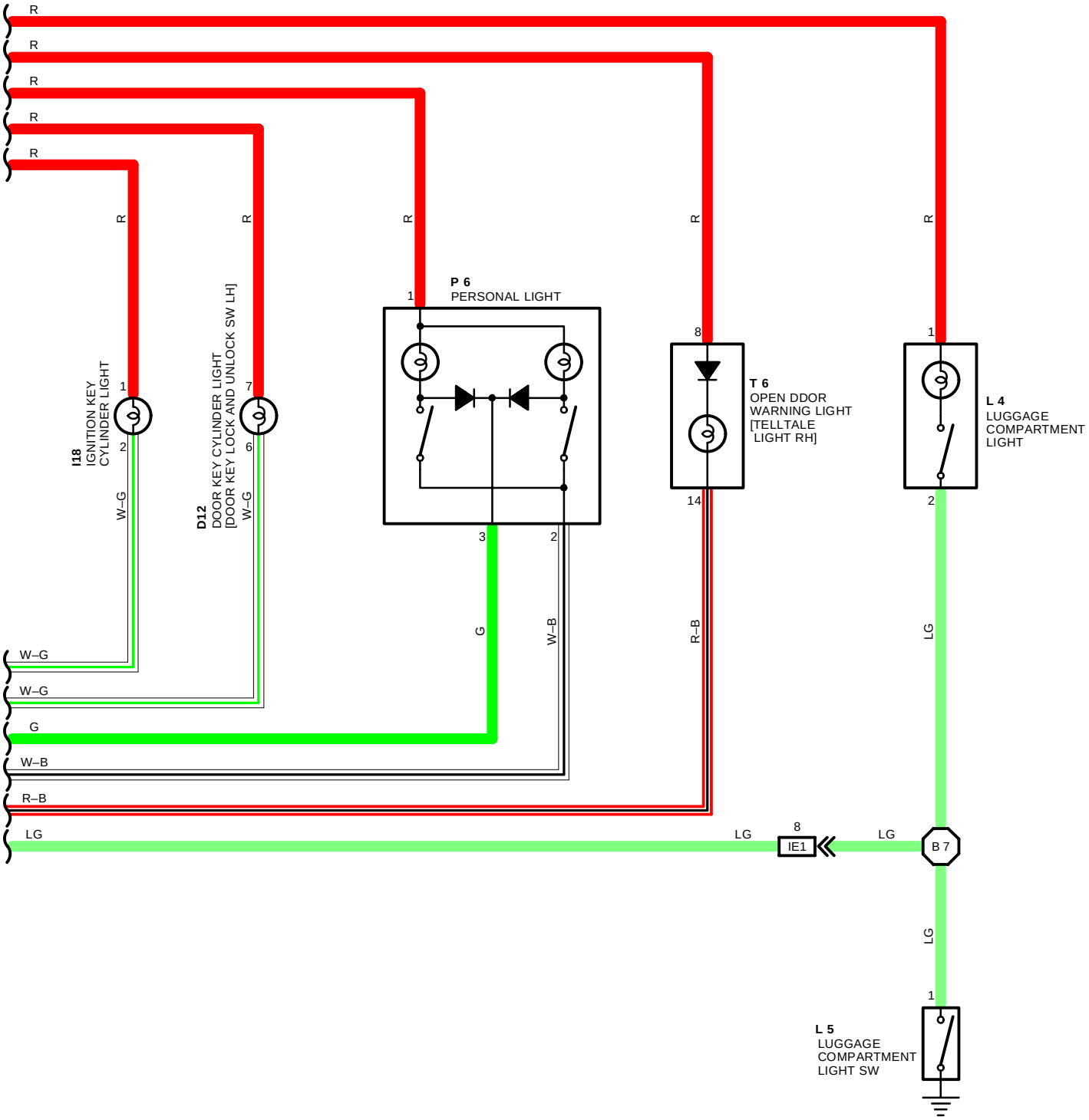
R
R
R
R
R
R
R
R
R
R
I18
IGNITION KEY
CYLINDER LIGHT
1
2
W–G
D12
DOOR KEY CYLINDER LIGHT
[DOOR KEY LOCK AND UNLOCK SW LH]
7
6
W–G
P 6
PERSONAL LIGHT
1
3
2
G
W–B
T 6
OPEN DDOR
WARNING LIGHT
[TELLTALE
LIGHT RH]
8
14
R–B
L 4
LUGGAGE
COMPARTMENT
LIGHT
1
2
LG
W–G
W–G
G
W–B
R–B
LG
LG
8
IE1
LG
B 7
LG
1
L 5
LUGGAGE
COMPARTMENT
LIGHT SW

INTERIOR LIGHT

SERVICE HINTS

INTEGRATION RELAY (J/B NO.1)
1–GROUND : ALWAYS APPROX. **12** VOLTS
4–GROUND : CONTINUOUS WITH RH DOOR OPEN OR LH DOOR OPEN

D10, D11 DOOR COURTESY SW LH, RH
1–2 : CLOSED WITH DOOR OPEN

L 5 LUGGAGE COMPARTMENT LIGHT SW
1–GROUND : CLOSED WITH LUGGAGE COMPARTMENT DOOR OPEN

: PARTS LOCATION

CODE	SEE PAGE	CODE	SEE PAGE	CODE	SEE PAGE
D 7	28	**D15**	30	**L 4**	30
D10	30	**D16**	30	**L 5**	30
D11	30	**I18**	29	**P 6**	30
D12	30	**I20** A	29	**T 6**	29

: RELAY BLOCKS

CODE	SEE PAGE	RELAY BLOCKS (RELAY BLOCK LOCATION)
2	22	R/B NO. 2 (ENGINE COMPARTMENT LEFT)

: JUNCTION BLOCK AND WIRE HARNESS CONNECTOR

CODE	SEE PAGE	JUNCTION BLOCK AND WIRE HARNESS (CONNECTOR LOCATION)
1B	20	ENGINE ROOM MAIN WIRE AND J/B NO. 1 (LEFT KICK PANEL)
1C	20	FLOOR NO. 2 WIRE AND J/B NO. 1 (LEFT KICK PANEL)
1D	20	FRONT DOOR LH WIRE AND J/B NO. 1 (LEFT KICK PANEL)
1E	20	INSTRUMENT PANEL WIRE AND J/B NO. 1 (LEFT KICK PANEL)
1F	20	ROOF WIRE AND J/B NO. 1 (LEFT KICK PANEL)
1H	20	COWL WIRE AND J/B NO. 1 (LEFT KICK LEFT)
1I		
1J		
1K		

: CONNECTOR JOINING WIRE HARNESS AND WIRE HARNESS

CODE	SEE PAGE	JOINING WIRE HARNESS AND WIRE HARNESS (CONNECTOR LOCATION)
IC2	36	FLOOR NO. 2 WIRE AND COWL WIRE (LEFT KICK PANEL)
ID1	36	FRONT DOOR LH WIRE AND INSTRUMENT PANEL WIRE (LEFT KICK PANEL)
IE1	36	INSTRUMENT PANEL WIRE AND FLOOR NO. 2 WIRE (LEFT KICK PANEL)
IF2	36	INSTRUMENT PANEL WIRE AND COWL WIRE (INSTRUMENT PANEL REINFORCEMENT LH)
IL1	38	FRONT DOOR RH WIRE AND INSTRUMENT PANEL WIRE (RIGHT KICK PANEL)

: GROUND POINTS

CODE	SEE PAGE	GROUND POINTS LOCATION
IE	36	LEFT KICK PANEL
IG	36	RIGHT KICK PANEL
IH		
BI	40	LEFT QUARTER PILLAR

: SPLICE POINTS

CODE	SEE PAGE	WIRE HARNESS WITH SPLICE POINTS	CODE	SEE PAGE	WIRE HARNESS WITH SPLICE POINTS
I 4	38	COWL WIRE	**B 1**	40	FRONT DOOR LH WIRE
I11			**B 7**	40	FLOOR NO. 2 WIRE

D 7



D10

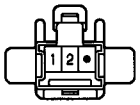

D11

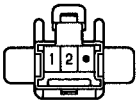

D12



D15 GRAY



D16 GRAY



I18 BLUE



I20 (A)

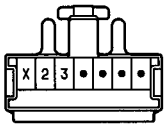

L 4



L 5 GRAY



P 6

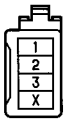

T 6

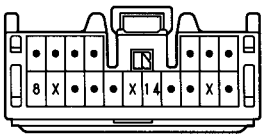

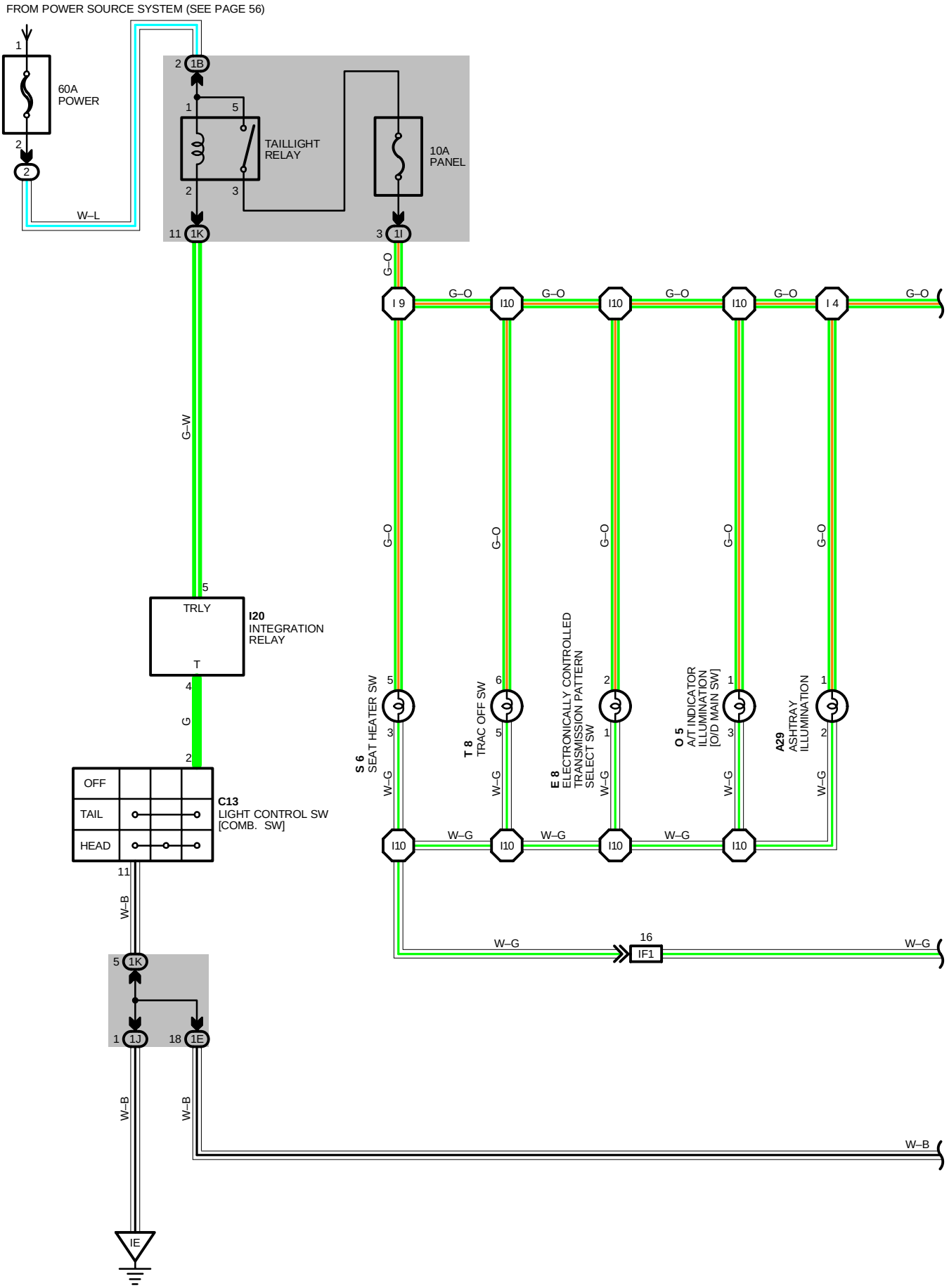
FROM POWER SOURCE SYSTEM (SEE PAGE 56)
60A POWER
TAILLIGHT RELAY
10A PANEL
W–L
G–W
G–O
TRLY
I20 INTEGRATION RELAY
G
C13 LIGHT CONTROL SW [COMB. SW]
OFF
TAIL
HEAD
W–B
S 6 SEAT HEATER SW
T 8 TRAC OFF SW
E 8 ELECTRONICALLY CONTROLLED TRANSMISSION PATTERN SELECT SW
O 5 A/T INDICATOR ILLUMINATION [O/D MAIN SW]
A29 ASHTRAY ILLUMINATION
W–G
IF1
IE

*1 : W/ STEREO POWER AMPLIFIER
*2 : W/O STEREO POWER AMPLIFIER

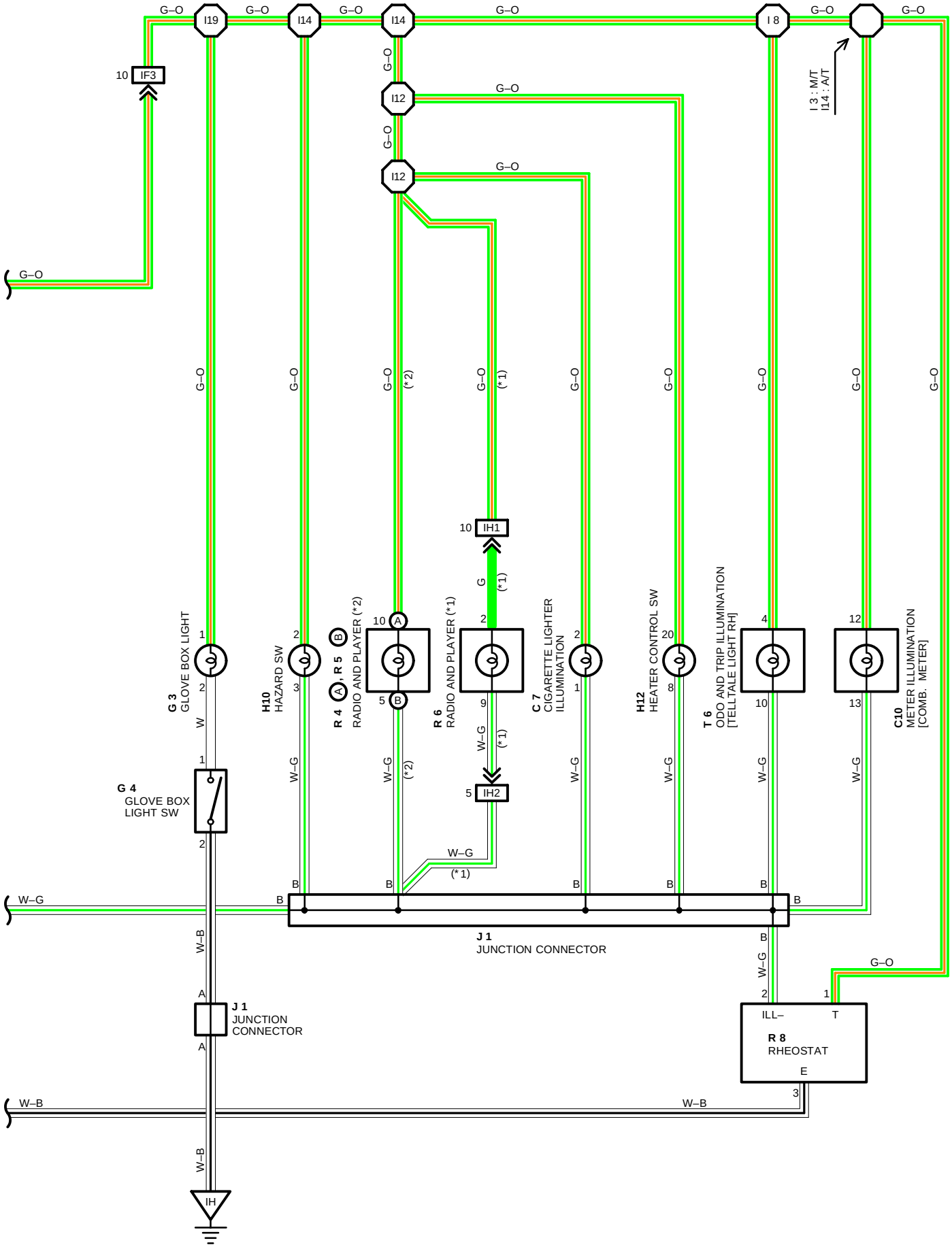

ILLUMINATION

SERVICE HINTS

TAILLIGHT RELAY

5–3 : CLOSED WITH LIGHT CONTROL SW AT **TAIL** OR **HEAD** POSITION

C13 LIGHT CONTROL SW [COMB. SW]

2–11 : CLOSED WITH LIGHT CONTROL SW AT **TAIL** OR **HEAD** POSITION

: PARTS LOCATION

CODE	SEE PAGE	CODE		SEE PAGE	CODE	SEE PAGE
A29	28	**H10**		29	**R 6**	29
C 7	28	**H12**		29	**R 8**	29
C10	28	**I20**		29	**S 6**	29
C13	28	**J 1**		29	**T 6**	29
E 8	29	**O 5**		29	**T 8**	29
G 3	29	**R 4**	A	29		
G 4	29	**R 5**	B	29		

: RELAY BLOCKS

CODE	SEE PAGE	RELAY BLOCKS (RELAY BLOCK LOCATION)
2	22	R/B NO. 2 (ENGINE COMPARTMENT LEFT)

: JUNCTION BLOCK AND WIRE HARNESS CONNECTOR

CODE	SEE PAGE	JUNCTION BLOCK AND WIRE HARNESS (CONNECTOR LOCATION)
1B	20	ENGINE ROOM MAIN WIRE AND J/B NO. 1 (LEFT KICK PANEL)
1E	20	INSTRUMENT PANEL WIRE AND J/B NO. 1 (LEFT KICK PANEL)
1I	20	COWL WIRE AND J/B NO. 1 (LEFT KICK PANEL)
1J		
1K		

: CONNECTOR JOINING WIRE HARNESS AND WIRE HARNESS

CODE	SEE PAGE	JOINING WIRE HARNESS AND WIRE HARNESS (CONNECTOR LOCATION)
IF1	36	INSTRUMENT PANEL WIRE AND COWL WIRE (INSTRUMENT PANEL REINFORCEMENT LH)
IF3	36	INSTRUMENT PANEL WIRE AND COWL WIRE (RIGHT KICK PANEL)
IH1		INSTRUMENT PANEL WIRE AND CONSOLE BOX WIRE (UNDER THE INSTRUMENT PANEL BRACE RH)
IH2	38	

: GROUND POINTS

CODE	SEE PAGE	GROUND POINTS LOCATION
IE	36	LEFT KICK PANEL
IH	36	RIGHT KICK PANEL

: SPLICE POINTS

CODE	SEE PAGE	WIRE HARNESS WITH SPLICE POINTS	CODE	SEE PAGE	WIRE HARNESS WITH SPLICE POINTS
I 3	38	INSTRUMENT PANEL WIRE	**I10**	38	COWL WIRE
I 4	38	COWL WIRE	**I12**	38	INSTRUMENT PANEL WIRE
I 8	38	INSTRUMENT PANEL WIRE	**I14**		
I 9	38	COWL WIRE	**I19**		

A29

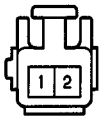

C 7 GRAY



C10 BLUE

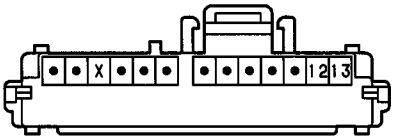

C13 BLACK

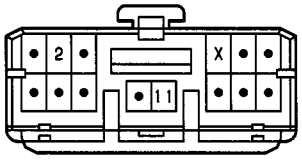

E 8

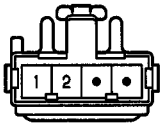

G 3 BLACK



G 4 BLACK



H10 BLACK

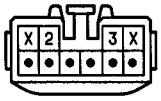

H12 ORANGE

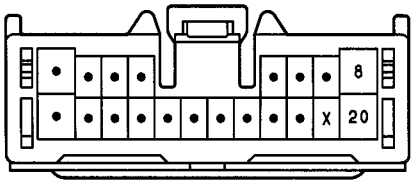

I20

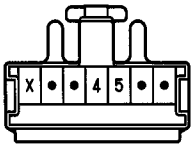

J 1

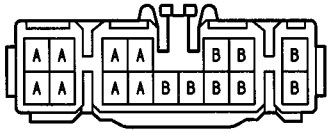

(HINT:SEE PAGE 7)

O 5 BLUE

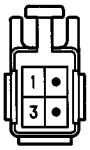

R 4 Ⓐ

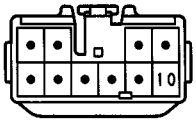

R 5 Ⓑ

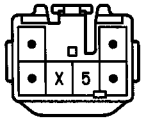

R 6

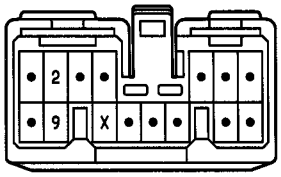

R 8 BLUE

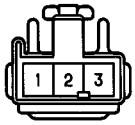

S 6 BLACK

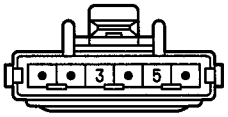

T 6

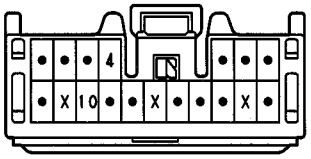

T 8 BLACK

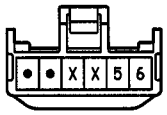

FRONT WIPER AND WASHER

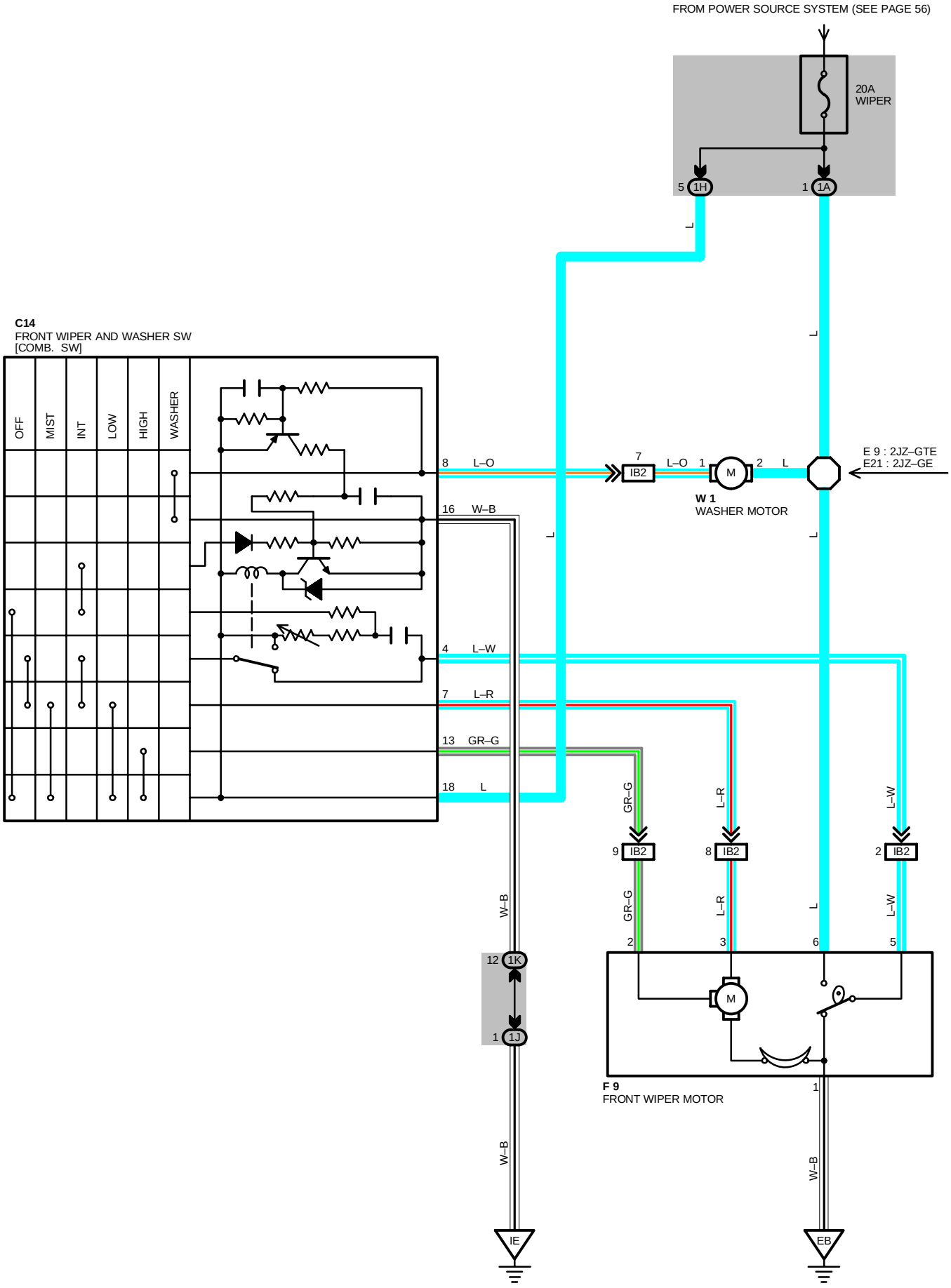

SYSTEM OUTLINE

WITH THE IGNITION SW TURNED ON, THE CURRENT FLOWS TO **TERMINAL 18** OF THE WIPER AND WASHER SW, **TERMINAL 2** OF THE WASHER MOTOR AND **TERMINAL 6** OF THE FRONT WIPER MOTOR THROUGH THE **WIPER** FUSE.

1. LOW SPEED POSITION

WITH WIPER SW TURNED TO **LOW** POSITION, THE CURRENT FLOWS FROM **TERMINAL 18** OF THE WIPER AND WASHER SW → **TERMINAL 7** → **TERMINAL 3** OF THE FRONT WIPER MOTOR → **TERMINAL 1** → TO **GROUND** AND CAUSES TO THE WIPER MOTOR TO RUN AT LOW SPEED.

2. HIGH SPEED POSITION

WITH WIPER SW TURNED TO **HIGH** POSITION, THE CURRENT FLOWS FROM **TERMINAL 18** OF THE WIPER AND WASHER SW → **TERMINAL 13** → **TERMINAL 2** OF THE FRONT WIPER MOTOR → **TERMINAL 1** → TO **GROUND** AND CAUSES TO THE WIPER MOTOR TO RUN AT HIGH SPEED.

3. INT POSITION

WITH WIPER SW TURNED TO **INT** POSITION, THE RELAY OPERATES AND THE CURRENT WHICH IS CONNECTED BY RELAY FUNCTION FLOWS FROM **TERMINAL 18** OF THE WIPER AND WASHER SW → **TERMINAL 16** → TO **GROUND**. THIS FLOWS OF CURRENT OPERATES THE INTERMITTENT CIRCUIT AND THE CURRENT FLOWS FROM **TERMINAL 18** OF THE WIPER AND WASHER SW → **TERMINAL 7** → **TERMINAL 3** OF THE FRONT WIPER MOTOR → **TERMINAL 1** → TO **GROUND** AND FUNCTIONS.

THE INTERMITTENT OPERATION IS CONTROLLED BY A CONDENSER'S CHARGED AND DISCHARGED FUNCTION INSTALLED IN RELAY AND INTERMITTENT TIME IS CONTROLLED BY A TIME CONTROL SW TO CHARGE THE CHARGING TIME OF THE CONDENSER.

4. MIST POSITION

WITH WIPER SW TURNED TO **MIST** POSITION, THE CURRENT FLOWS FROM **TERMINAL 18** OF THE WIPER AND WASHER SW → **TERMINAL 7** → **TERMINAL 3** OF THE FRONT WIPER MOTOR → **TERMINAL 1** → TO **GROUND** AND CAUSES THE WIPER MOTOR TO RUN AT LOW SPEED.

5. WASHER CONTINUOUS OPERATION

WITH WASHER SW TURNED TO ON, THE CURRENT FLOWS FROM **TERMINAL 2** OF THE WAHSER MOTOR → **TERMINAL 1** → **TERMINAL 8** OF THE WIPER AND WASHER SW → **TERMINAL 16** → TO **GROUND** AND CAUSES TO THE WASHER MOTOR TO RUN, AND WINDOW WASHER IS JET. THIS CAUSES THE CURRENT TO FLOW WASHER CONTINUOUS OPERATION CIRCUIT IN **TERMINAL 18** OF THE WIPER AND WASHER SW → **TERMINAL 7** → **TERMINAL 3** OF THE FRONT WIPER MOTOR → **TERMINAL 1** → TO **GROUND** AND FUNCTION.

SYSTEM OUTLINE

C14 FRONT WIPER AND WASHER SW (COMB. SW)

16–GROUND : ALWAYS CONTINUOUS
18–GROUND : APPROX. **12** VOLTS WITH IGNITION SW AT **ON** POSITION
7–GROUND : APPROX. **12** VOLTS WITH WIPER AND WASHER SW AT **LOW** POSITION
APPROX. **12** VOLTS EVERY APPROX. **1** TO **10** SECONDS INTERMITTENTLY WITH WIPER SW AT **INT** POSITION
4–GROUND : APPROX. **12** VOLTS WITH IGNITION SW ON UNLESS WIPER MOTOR AT **STOP** POSITION
13–GROUND : APPROX. **12** VOLTS WITH IGNITION SW ON AND WIPER AND WASHER SW AT **HIGH** POSITION

F 9 FRONT WIPER MOTOR

5–6 : CLOSED UNLESS WIPER MOTOR AT **STOP** POSITION

○ : PARTS LOCATION

CODE	SEE PAGE	CODE	SEE PAGE	CODE	SEE PAGE
C14	28	**F 9**	26 (2JZ–GE)	**W 1**	27 (2JZ–GE)
F 9	24 (2JZ–GTE)	**W 1**	25 (2JZ–GTE)		

⬭ : JUNCTION BLOCK AND WIRE HARNESS CONNECTOR

CODE	SEE PAGE	JUNCTION BLOCK AND WIRE HARNESS (CONNECTOR LOCATION)
1A	20	ENGINE ROOM MAIN WIRE AND J/B NO. 1 (LEFT KICK PANEL)
1H	20	COWL WIRE AND J/B NO. 1 (LEFT KICK PANEL)
1J		
1K		

▭ : CONNECTOR JOINING WIRE HARNESS AND WIRE HARNESS

CODE	SEE PAGE	JOINING WIRE HARNESS AND WIRE HARNESS (CONNECTOR LOCATION)
IB2	36	ENGINE ROOM MAIN WIRE AND COWL WIRE (LEFT KICK PANEL)

FRONT WIPER AND WASHER

: GROUND POINTS

CODE	SEE PAGE	GROUND POINTS LOCATION
EB	32 (2JZ–GTE)	FRONT SIDE OF LEFT FENDER
	34 (2JZ–GE)	
IE	36	LEFT KICK PANEL

: SPLICE POINTS

CODE	SEE PAGE	WIRE HARNESS WITH SPLICE POINTS	CODE	SEE PAGE	WIRE HARNESS WITH SPLICE POINTS
E 9	32	ENGINE ROOM MAIN WIRE	**E21**	34	ENGINE ROOM MAIN WIRE

C14 BLACK

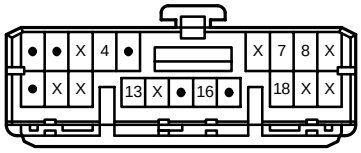

F 9 BLACK



W 1 BLACK

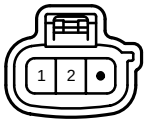

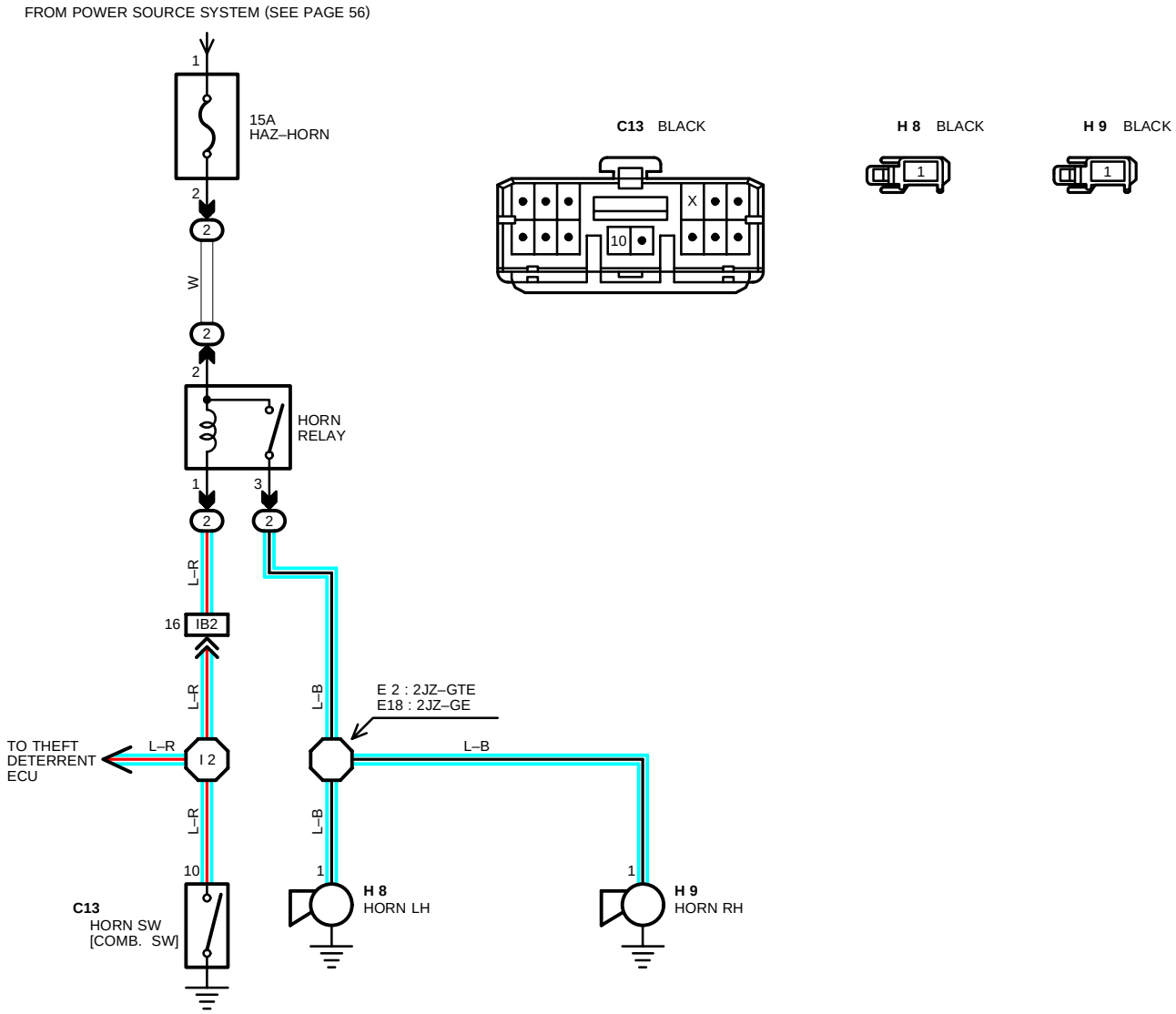

SERVICE HINTS

HORN RELAY

(2) 2–**(2)** 3 : CLOSED WITH HORN SW ON

: PARTS LOCATION

CODE	SEE PAGE	CODE	SEE PAGE	CODE	SEE PAGE
C13	28	**H 8**	27 (2JZ–GE)	**H 9**	27 (2JZ–GE)
H 8	24 (2JZ–GTE)	**H 9**	24 (2JZ–GTE)		

: RELAY BLOCKS

CODE	SEE PAGE	RELAY BLOCKS (RELAY BLOCK LOCATION)
2	22	R/B NO. 2 (ENGINE COMPARTMENT LEFT)

: CONNECTOR JOINING WIRE HARNESS AND WIRE HARNESS

CODE	SEE PAGE	JOINING WIRE HARNESS AND WIRE HARNESS (CONNECTOR LOCATION)
IB2	36	ENGINE ROOM MAIN WIRE AND COWL WIRE (LEFT KICK PANEL)

: SPLICE POINTS

CODE	SEE PAGE	WIRE HARNESS WITH SPLICE POINTS	CODE	SEE PAGE	WIRE HARNESS WITH SPLICE POINTS
E 2	32	ENGINE ROOM MAIN WIRE	**I 2**	38	COWL WIRE
E18	34				

THEFT DETERRENT AND DOOR LOCK CONTROL

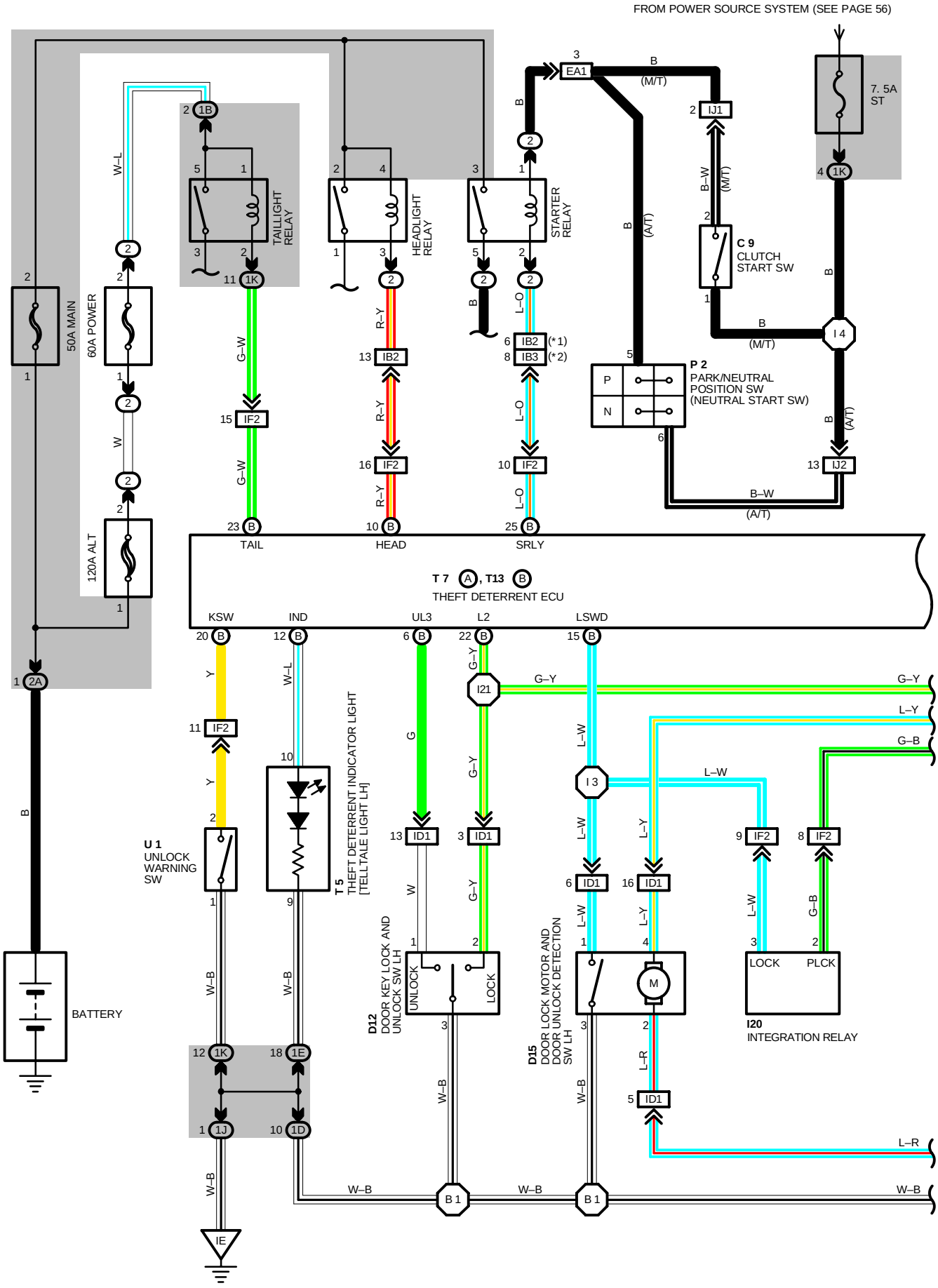

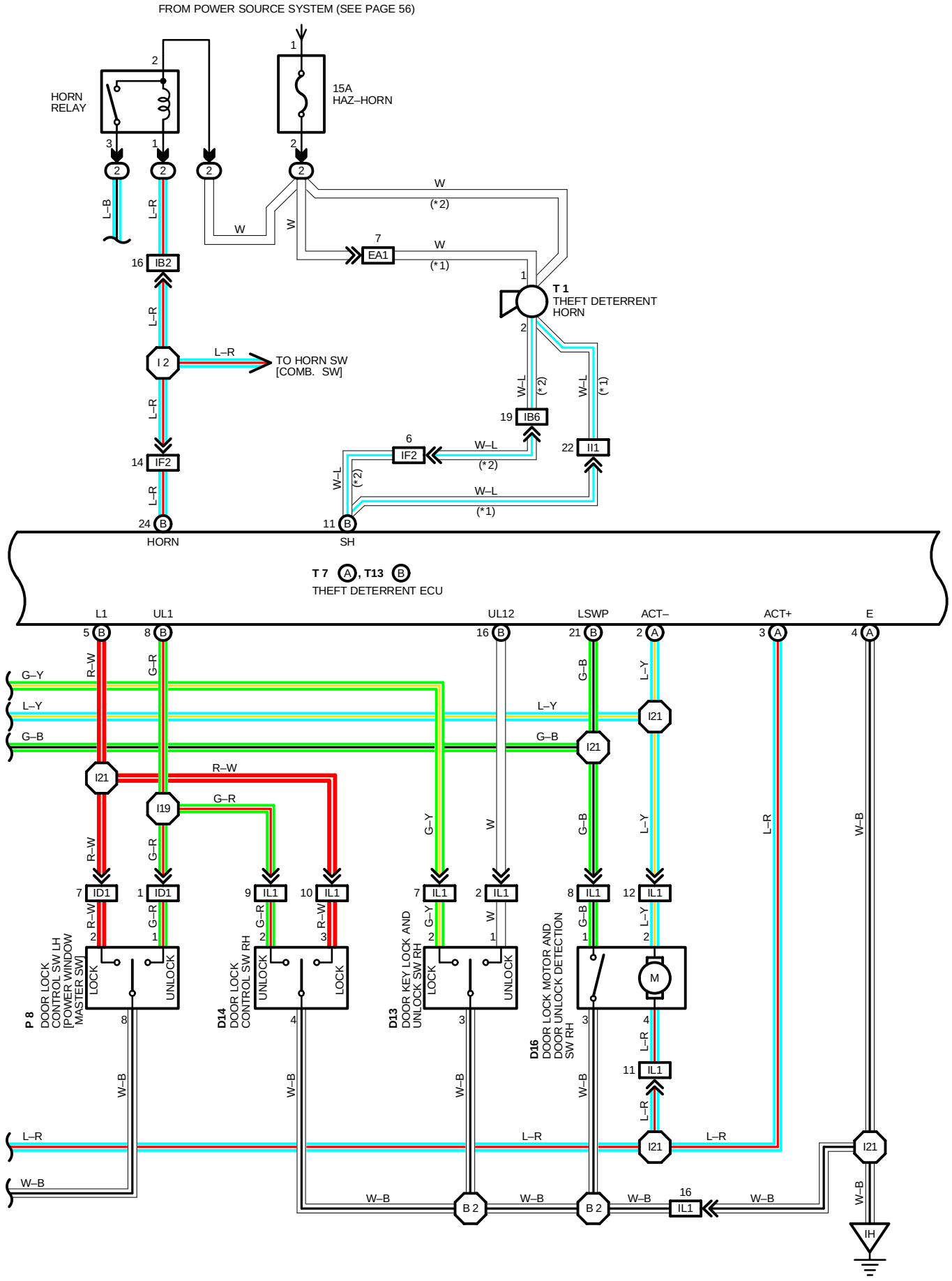
FROM POWER SOURCE SYSTEM (SEE PAGE 56)
HORN RELAY
15A HAZ–HORN
TO HORN SW [COMB. SW]
T 1 THEFT DETERRENT HORN
HORN
SH
T 7 A, T13 B THEFT DETERRENT ECU
L1
UL1
UL12
LSWP
ACT–
ACT+
E
P 8 DOOR LOCK CONTROL SW LH [POWER WINDOW MASTER SW]
D14 DOOR LOCK CONTROL SW RH
D13 DOOR KEY LOCK AND UNLOCK SW RH
D16 DOOR LOCK MOTOR AND DOOR UNLOCK DETECTION SW RH
LOCK
UNLOCK
M
IH

THEFT DETERRENT AND DOOR LOCK CONTROL

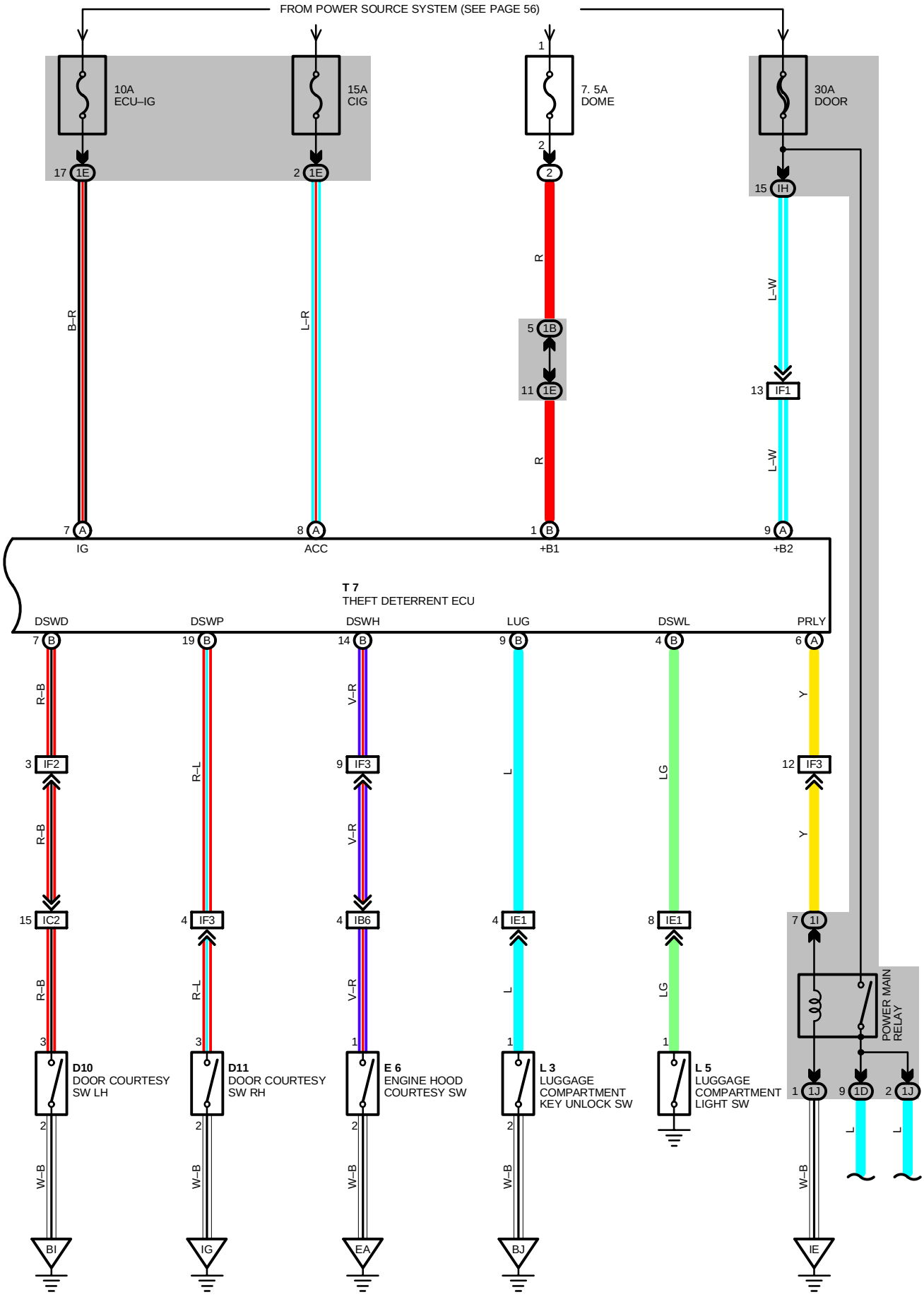

SYSTEM OUTLINE

CURRENT ALWAYS FLOWS TO **TERMINAL (A)9** OF THE THEFT DETERRENT ECU THROUGH THE **DOOR** FUSE, AND TO **TERMINAL (B)1** THROUGH THE **DOME** FUSE.

WHEN THE IGNITION SW TURNED ON, THE CURRENT FLOWING THROUGH THE **ECU–IG** FUSE → **TERMINAL (A)7** OF THE ECU → **TERMINAL (A)6** FLOWS THROUGH THE COIL SIDE OF THE POWER MAIN RELAY TO **GROUND,** CAUSING THE RELAY TO OPERATE. THE CURRENT FLOWING THROUGH THE **DOOR** FUSE FLOWS TO THE DOOR LOCK CONTROL SWITCHES, CAUSING THE INDICATOR LIGHT TO LIGHT UP.

1. MANUAL LOCK OPERATION

WHEN THE DOOR CONTROL SW OR KEY SW ARE PUSHED TO **LOCK** POSITION, A LOCK SIGNAL IS INPUT TO **TERMINAL (B)5, (B)22** (FOR KEY SW) OF THE THEFT DETERRENT ECU AND CAUSES THE ECU TO FUNCTION. CURRENT FLOWS FROM **TERMINAL (A)9** OF THE ECU → **TERMINAL (A)3** → **TERMINAL 2** (LH), **TERMINAL 4** (RH) OF THE DOOR LOCK MOTORS → **TERMINAL 4** (LH), **TERMINAL 2** (RH) → **TERMINAL (A)2** OF THE ECU → **TERMINAL (A)4** → **GROUND** AND THE DOOR LOCK MOTOR CAUSES THE DOOR TO LOCK.

2. MANUAL UNLOCK OPERATION

WHEN THE DOOR LOCK CONTROL SW OR KEY SW ARE PUSHED TO **UNLOCK** POSITION, AN UNLOCK SIGNAL IS INPUT TO **TERMINAL (A)8, (B)6** (FOR KEY SW LH) OR **(B)16** (FOR KEY SW RH) OF THE THEFT DETERRENT ECU AND CAUSES TO FUNCTION. CURRENT FLOWS FROM **TERMINAL (A)9** OF THE ECU → **TERMINAL (A)2** → **TERMINAL 4** (LH), **TERMINAL 2** (RH) OF THE DOOR LOCK MOTORS → **TERMINAL 2** (LH), **TERMINAL 4** (RH) → **TERMINAL (A)3** OF THE ECU → **TERMINAL (A)4** → **GROUND** AND THE DOOR LOCK MOTOR CAUSES THE DOOR TO UNLOCK.

WHEN UNLOCK OPERATION OCCURS USING THE LH DOOR KEY SW, DOING THE UNLOCK OPERATION ONCE UNLOCKS ONLY THE DRIVER'S DOOR. TO UNLOCK ALL THE OTHER DOORS TOGETHER, UNLOCK OPERATION MUST BE DONE AGAIN WITHIN **3** SECONDS OF THE FIRST OPERATION.

3. IGNITION KEY REMINDER OPERATION

∗ OPERATION OF DOOR LOCK BUTTON (OPERATION OF DOOR LOCK MOTORS)

WHEN THE IGNITION KEY IS IN THE CYLINDER (UNLOCK WARNING SW ON) AND THE DOOR IS OPENED AND LOCKED USING DOOR LOCK BUTTON (DOOR LOCK MOTOR), THE DOOR IS LOCKED ONCE BUT EACH DOOR IS UNLOCKED SOON BY THE OPERATION OF THE ECU. AS A RESULT OF ECU ACTIVATION, THE CURRENT FLOWS FROM **TERMINAL (A)9** OF THE ECU → **TERMINAL (A)2** → **TERMINAL 4** (LH), **TERMINAL 2** (RH) OF THE DOOR LOCK MOTORS → **TERMINAL 2** (LH), **TERMINAL 4** (RH) → **TERMINAL (A)3** OF THE ECU → **TERMINAL (A)4** → **GROUND** AND CAUSES ALL THE DOOR LOCK CONTROL SW AND DOOR LOCK KEY SW.

∗ KEY LESS LOCK OPERATION

WHEN THE IGNITION KEY IS STILL INSERTED IN THE CYLINDER (UNLOCK WARNING SW ON), THE DOOR IS OPEN AND UNLOCK OPERATION IS PREVENTED BY KEEPING THE DOOR LOCK BUTTON PRESSED TO THE LOCK SIDE, THE DOOR IS KEPT IN THE LOCK CONDITION. IF THE DOOR IS THEN CLOSED, A SIGNAL IS INPUT TO THE ECU FROM THE DOOR COURTESY SW. THIS ACTIVATES THE ECU AND EACH DOOR IS UNLOCKED.

THEFT DETERRENT AND DOOR LOCK CONTROL

SERVICE HINTS

D10, D11 DOOR COURTESY SW LH, RH
3–2 : CLOSED WITH DOOR OPEN

D12, D13 DOOR KEY LOCK AND UNLOCK SW LH, RH
1–3 : CLOSED WITH DOOR LOCK CYLINDER UNLOCKED WITH KEY
2–3 : CLOSED WITH DOOR LOCK CYLINDER LOCKED WITH KEY

D15, D16 DOOR LOCK MOTOR AND DOOR UNLOCK DETECTION SW LH, RH
1–3 : CLOSED WITH **UNLOCK** POSITION

E 6 ENGINE HOOD COURTESY SW
1–2 : CLOSED WITH ENGINE HOOD OPEN

U 1 UNLOCK WARNING SW
2–1 : CLOSED WITH IGNITION KEY IN CYLINDER

L 3 LUGGAGE COMPARTMENT KEY UNLOCK SW
2–1 : CLOSED WITH DOOR LOCK CYLINDER UNLOCKED WITH KEY

L 5 LUGGAGE COMPARTMENT LIGHT SW
1–GROUND: CLOSED WITH DOOR OPEN

T 7(A), T13(B) THEFT DETERRENT ECU
(B) 9–GROUND: CONTINUOUS WITH LUGGAGE COMPARTMENT DOOR TO **UNLOCK** POSITION
(B)14–GROUND: CONTINUOUS WITH ENGINE HOOD OPEN
(B) 4–GROUND: CONTINUOUS WITH LUGGAGE COMPARTMENT DOOR OPEN
(B) 8–GROUND: CONTINUOUS WITH DOOR LOCK CONTROL SW TO **UNLOCK** POSITION
(B) 5–GROUND: CONTINUOUS WITH DOOR LOCK CONTROL SW TO **LOCK** POSITION
(B)25–GROUND: APPROX. **12** VOLTS WITH SHIFT LEVER IN **N** OR **P** POSITION AND IGNITION SW AT **ST** POSITION (A/T)
; APPROX. **12** VOLTS WITH CLUTCH PEDAL FULLY DEPRESSED (M/T)
(A) 7–GROUND: APPROX. **12** VOLTS WITH IGNITION SW AT **ON** POSITION
(B)20–GROUND: CONTINUOUS WITH IGNITION KEY IN CYLINDER
(B)15–GROUND: CONTINUOUS WITH LH DOOR TO **UNLOCK** POSITION
(B)21–GROUND: CONTINUOUS WITH RH DOOR TO **UNLOCK** POSITION
(B) 6–GROUND: CONTINUOUS WITH DOOR KEY LOCK AND UNLOCK SW LH TO **UNLOCK** POSITION
(B)16–GROUND: CONTINUOUS WITH DOOR KEY LOCK AND UNLOCK SW RH TO **UNLOCK** POSITION
(B)22–GROUND: CONTINUOUS WITH DOOR KEY LOCK AND UNLOCK SW TO **LOCK** POSITION
(A) 4–GROUND: ALWAYS CONTINUOUS
(B) 1–GROUND: ALWAYS APPROX. **12** VOLTS

: PARTS LOCATION

CODE	SEE PAGE	CODE	SEE PAGE	CODE		SEE PAGE
C 9	28	**E 6**	24 (2JZ–GTE)	**T 1**		25 (2JZ–GTE)
D10	30		26 (2JZ–GE)			27 (2JZ–GE)
D11	30	**I20**	29	**T 5**		29
D12	30	**L 3**	30	**T 7**	A	29
D13	30	**L 5**	30	**T13**	B	29
D14	30	**P 2**	25 (2JZ–GTE)	**U 1**		29
D15	30		27 (2JZ–GE)			
D16	30	**P 8**	30			

: RELAY BLOCKS

CODE	SEE PAGE	RELAY BLOCKS (RELAY BLOCK LOCATION)
2	22	R/B NO. 2 (ENGINE COMPARTMENT LEFT)

: JUNCTION BLOCK AND WIRE HARNESS CONNECTOR

CODE	SEE PAGE	JUNCTION BLOCK AND WIRE HARNESS (CONNECTOR LOCATION)
1B	20	ENGINE ROOM MAIN WIRE AND J/B NO. 1 (LEFT KICK PANEL)
1D	20	FRONT DOOR LH WIRE AND J/B NO.1 (LEFT KICK PANEL)
1E	20	INSTRUMENT PANEL WIRE AND J/B NO.1 (LEFT KICK PANEL)
1H	20	COWL WIRE AND J/B NO.1(LEFT KICK PANEL)
1I		
1J		
1K		
2A	22	BATTERY AND J/B NO. 2 (ENGINE COMPARTMENT LEFT)

: CONNECTOR JOINING WIRE HARNESS AND WIRE HARNESS

CODE	SEE PAGE	JOINING WIRE HARNESS AND WIRE HARNESS (CONNECTOR LOCATION)
EA1	32 (2JZ–GTE) 34 (2JZ–GE)	ENGINE WIRE AND ENGINE ROOM MAIN WIRE (NEAR THE R/B NO. 2)
IB2	36	ENGINE ROOM MAIN WIRE AND COWL WIRE (LEFT KICK PANEL)
IB3		
IB6	36	ENGINE ROOM MAIN WIRE AND COWL WIRE (RIGHT KICK PANEL)
IC2	36	FLOOR NO. 2 WIRE AND COWL WIRE (LEFT KICK PANEL)
ID1	36	FRONT DOOR LH WIRE AND INSTRUMENT PANEL WIRE (LEFT KICK PANEL)
IE1	36	INSTRUMENT PANEL WIRE AND FLOOR NO. 2 WIRE (LEFT KICK PANEL)
IF1	36	INSTRUMENT PANEL WIRE AND COWL WIRE (INSTRUMENT PANEL REINFORCEMENT LH)
IF2		
IF3	36	INSTRUMENT PANEL WIRE AND COWL WIRE (RIGHT KICK PANEL)
II1	38	ENGINE WIRE AND INSTRUMENT PANEL WIRE (RIGHT KICK PANEL)
IJ1	38	ENGINE WIRE AND COWL WIRE (RIGHT KICK PANEL)
IJ2		
IL1	38	FRONT DOOR RH WIRE AND INSTRUMENT PANEL WIRE (RIGHT KICK PANEL)

: GROUND POINTS

CODE	SEE PAGE	GROUND POINTS LOCATION
EA	32 (2JZ–GTE) 34 (2JZ–GE)	FRONT SIDE OF RIGHT FENDER
IE	36	LEFT KICK PANEL
IG	36	RIGHT KICK PANEL
IH		
BI	40	LEFT QUARTER PILLAR
BJ	40	LOWER BACK PANEL CENTER

: SPLICE POINTS

CODE	SEE PAGE	WIRE HARNESS WITH SPLICE POINTS	CODE	SEE PAGE	WIRE HARNESS WITH SPLICE POINTS
I 2	38	COWL WIRE	I21	38	INSTRUMENT PANEL WIRE
I 3	38	INSTRUMENT PANEL WIRE	B 1	40	FRONT DOOR LH WIRE
I 4	38	COWL WIRE	B 2	40	FRONT DOOR RH WIRE
I19	38	INSTRUMENT PANEL WIRE			

C 9



D10

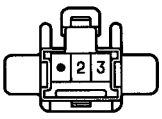

D11

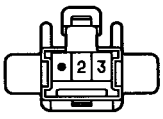

D12

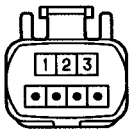

D13



D14

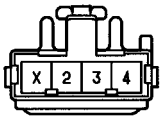

D15 GRAY



D16 GRAY



E 6 BLACK



I20

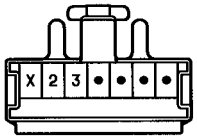

L 3



L 5 GRAY



P 2 GRAY

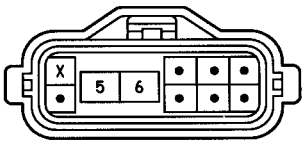

P 8

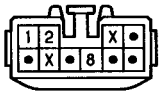

T 1 BLACK



(2JZ-GTE) T 5

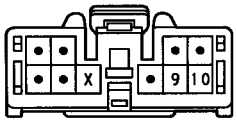

(2JZ-GE) T 5

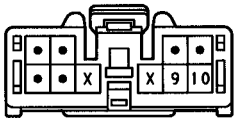

T 7 ORANGE

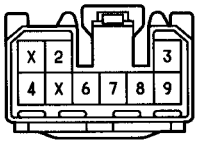

T13 ORANGE

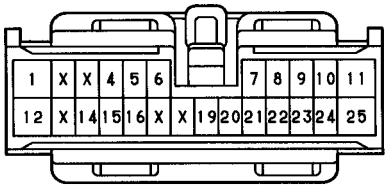

U 1 BLACK

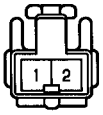

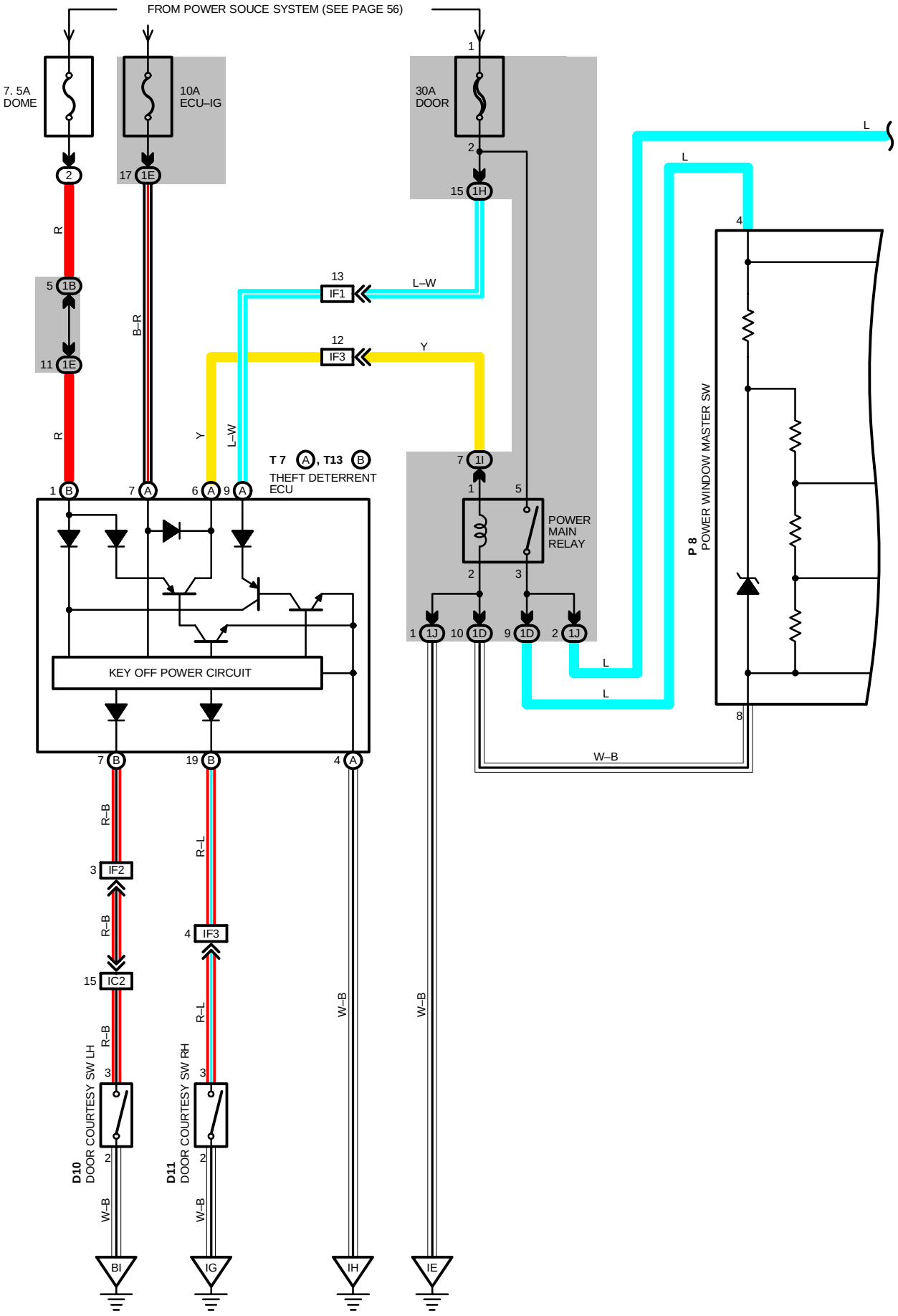
FROM POWER SOUCE SYSTEM (SEE PAGE 56)
7. 5A
DOME
10A
ECU–IG
30A
DOOR
17 1E
2
15 1H
1
R
5 1B
11 1E
B–R
13
IF1
L–W
12
IF3
Y
R
Y
L–W
T 7 A, T13 B
THEFT DETERRENT
ECU
1 B
7 A
6 A
9 A
7 1I
1
5
POWER
MAIN
RELAY
2
3
1 1J
10 1D
9 1D
2 1J
L
L
L
4
8
P 8
POWER WINDOW MASTER SW
W–B
KEY OFF POWER CIRCUIT
7 B
19 B
4 A
R–B
R–L
3
IF2
4
IF3
R–B
15
IC2
R–B
R–L
W–B
W–B
D10
DOOR COURTESY SW LH
D11
DOOR COURTESY SW RH
3
2
3
2
W–B
W–B
BI
IG
IH
IE

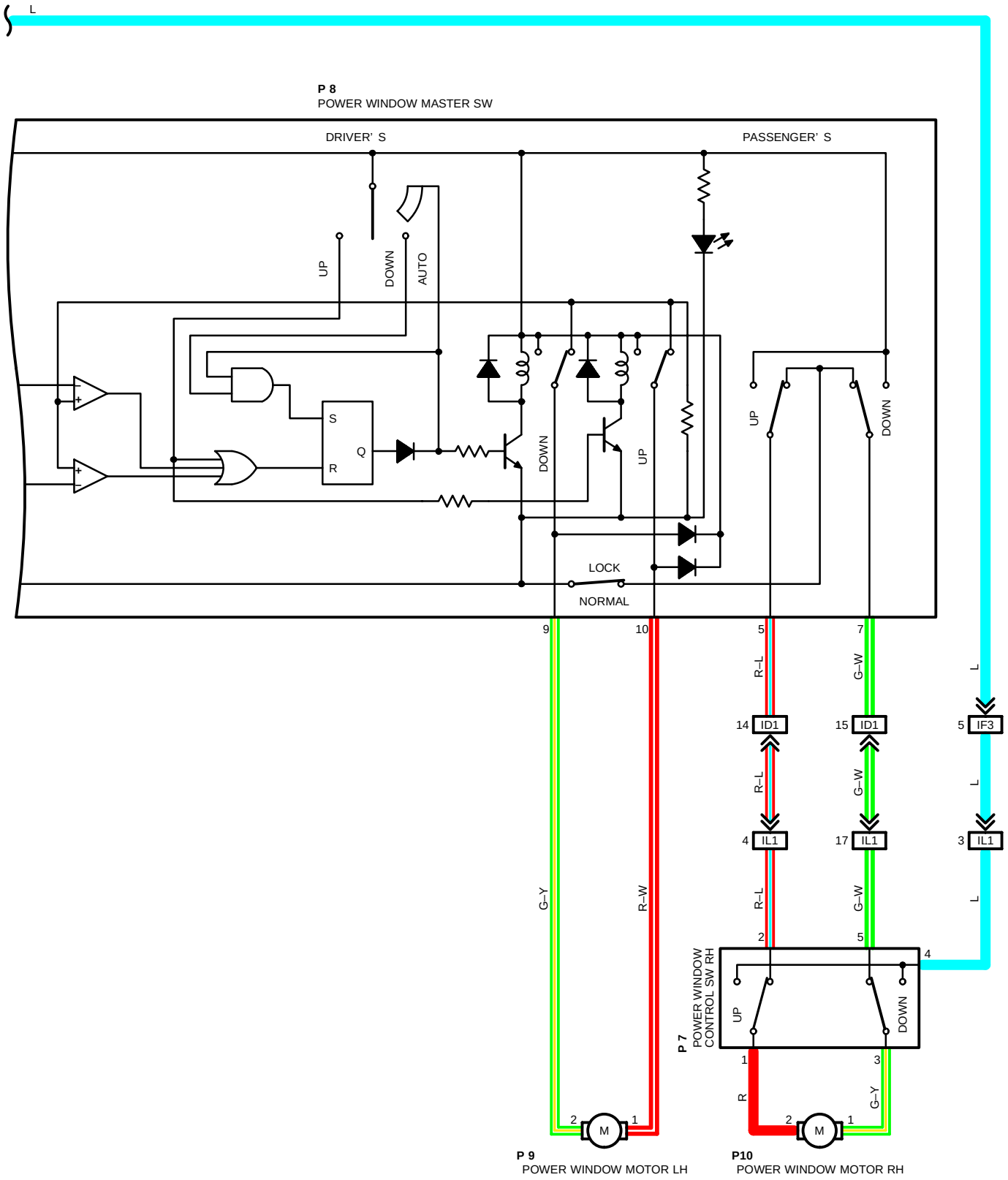
L
P 8
POWER WINDOW MASTER SW
DRIVER' S
PASSENGER' S
UP
DOWN
AUTO
S
Q
R
DOWN
UP
UP
DOWN
LOCK
NORMAL
9
10
5
7
R–L
G–W
L
14 ID1
15 ID1
5 IF3
R–L
G–W
L
4 IL1
17 IL1
3 IL1
R–L
G–W
L
G–Y
R–W
2
5
4
POWER WINDOW CONTROL SW RH
P 7
UP
DOWN
1
3
R
G–Y
2
M
1
2
M
1
P 9
POWER WINDOW MOTOR LH
P10
POWER WINDOW MOTOR RH

POWER WINDOW

SYSTEM OUTLINE

WITH THE IGNITION SW TURNED ON, CURRENT FLOWS THROUGH THE **ECU–IG** FUSE → **TERMINAL (A)7** OF THE THEFT DETERRENT ECU → **TERMINAL (A)6** → **TERMINAL 1** OF THE POWER MAIN RELAY → **TERMINAL 2** → **GROUND**, THIS ACTIVATES THE RELAY AND THE CURRENT FLOWING TO **TERMINAL 5** OF THE RELAY FROM **DOOR** FUSE FLOWS TO **TERMINAL 3** OF THE RELAY → **TERMINAL 4** OF THE POWER WINDOW MASTER SW AND **TERMINAL 4** OF THE POWER WINDOW CONTROL SW RH.

1. MANUAL OPERATION (DRIVER'S WINDOW)

WITH THE IGNITION SW TURNED ON AND WITH THE POWER WINDOW MASTER SW (DRIVER'S) IN **UP** POSITION, THE CURRENT FLOWING TO **TERMINAL 4** OF THE POWER WINDOW MASTER SW FLOWS TO **TERMINAL 10** OF THE MASTER SW → **TERMINAL 1** OF THE POWER WINDOW MOTOR → **TERMINAL 2** → **TERMINAL 9** OF THE MASTER SW → **TERMINAL 8** → GROUND AND CAUSES THE POWER WINDOW MOTOR TO ROTATE IN THE UP DIRECTION. THE WINDOW ASCENDS ONLY WHILE THE SW IS BEING PUSHED.

IN DOWN OPERATION, THE FLOW OF CURRENT FROM **TERMINAL 4** OF THE POWER WINDOW MASTER SW TO **TERNINAL 9** OF THE MASTER SW CAUSES THE FLOW OF CURRENT FROM **TERMINAL 2** OF THE POWER WINDOW MOTOR → **TERMINAL 1** → **TERMINAL 10** OF THE MASTER SW → **TERMINAL 8** → **GROUND**, FLOWING IN THE OPPOSITE DIRECTION TO MANUAL UP OPERATION AND CAUSING THE MOTOR TO ROTATE IN REVERSE, LOWERING THE WINDOW.

2. DRIVER'S WINDOW AUTO DOWN OPERATION

WHEN THE DRIVER'S WINDOW SW IS PUSHED STRONGLY ON THE DOWN SIDE, THE CURRENT FLOWING TO **TERMINAL 4** OF THE POWER WINDOW MASTER SW FLOWS TO THE DOWN CONTACT POINT AND AUTO DOWN CONTACT POINT OF THE DRIVER'S SW.

THIS ACTIVATES THE RELAY (DOWN SIDE) INSIDE THE POWER WINDOW MASTER SW, AND THE HOLD CIRCUIT ALSO TURNS ON AT THE SAME TIME, SO THE RELAY (DOWN SIDE) REMAINS ACTIVATED EVEN WHEN THE SW IS RELEASED.

CURRENT FLOWS AT THIS TIME FROM **TERMINAL 4** OF THE POWER WINDOW MASTER SW → **TERMINAL 9** → **TERMINAL 2** OF POWER WINDOW MOTOR → **TERMINAL 1** → **TERMINAL 10** OF POWER WINDOW MASTER SW → **TERMINAL 8** → **GROUND**, SO THE MOTOR CONTINUES TO OPERATE UNTIL THE DRIVER'S WINDOW IS FULLY DOWN.

WHEN THE DRIVER'S WINDOW FINISHES DOWN OPERATION THE HOLD CIRCUIT GOES OFF, SO THE RELAY (DOWN SIDE) ALSO TURNS OFF. THIS STOPS THE CURRENT FLOWING FROM **TERMINAL 4** OF THE POWER WINDOW MASTER SW TO **TERMINAL 9**, SO THE POWER WINDOW MOTOR STOPS AND AUTO DOWN OPERATION STOPS.

WHEN THE DRIVER'S SW IS PULLED ON THE UP SIDE DURING AUTO DOWN OPERATION, THE HOLD CIRCUIT IS TURNED OFF SO CURRENT FLOWS FROM **TERMINAL 4** OF THE POWER WINDOW MASTER SW TO **TERMINAL 9** IS CUT OFF AND THE POWER WINDOW MOTOR STOPS. IF THE SW REMAINS PULLED UP, THE RELAY (UP SIDE) IS ACTIVATED, SO CURRENT FLOWS FROM **TERMINAL 4** OF THE POWER WINDOW MASTER SW → **TERMINAL 10** → **TERMINAL 1** OF POWER WINDOW MOTOR → **TERMINAL 2** → **TERMINAL 9** → **TERMINAL 8** → **GROUND**, THE POWER WINDOW MOTOR ROTATES IN THE UP DIRECTION AND MANUAL UP OPERATION OCCURS WHILE THE SW IS PULLED UP.

3. MANUAL OPERATION BY POWER WINDOW SW (PASSENGER'S WINDOW)

WITH POWER WINDOW SW (PASSENGER'S) PULLED TO THE UP SIDE, CURRENT FLOWING FROM **TERMINAL 4** OF THE POWER WINDOW CONTROL SW FLOWS TO **TERMINAL 1** OF THE POWER WINDOW SW → **TERMINAL 2** OF THE POWER WINDOW MOTOR → **TERMINAL 1** → **TERMINAL 3** OF THE POWER WINDOW SW → **TERMINAL 5** → **TERMINAL 7** OF THE MASTER SW → **TERMINAL 8** → **GROUND** AND CAUSES THE POWER WINDOW MOTOR (PASSENGER'S) TO ROTATE IN THE UP DIRECTION. UP OPERATION CONTINUES ONLY WHILE THE POWER WINDOW SW IS PULLED TO THE UP SIDE. WHEN THE POWER WINDOW SW (PASSENGER'S) IS PULLED TO THE DOWN SIDE, THE CURRENT FLOWING TO THE MOTOR FLOWS IN THE OPPOSITE DIRECTION, FROM **TERMINAL 1** TO **TERMINAL 2**, AND THE MOTOR ROTATES IN REVERSE. WHEN THE WINDOW LOCK SW IS PUSHED TO THE LOCK SIDE, THE GROUND CIRCUIT TO THE PASSENGER'S WINDOW BECOMES OPEN.

AS A RESULT, EVEN IF OPEN/CLOSE OPERATION OF THE PASSENGER'S WINDOW IS TRIED, THE CURRENT FROM **TERMINAL 8** OF THE POWER WINDOW MASTER SW IS NOT GROUNDED AND THE MOTOR DOES NOT ROTATE, SO THE PASSENGER'S WINDOW CANNOT BE OPERATED AND WINDOW LOCK OCCURS. FURTHERMORE, REAR LH, RH WINDOW OPERATE THE SAME AS THE ABOVE CIRCUIT.

4. KEY OFF POWER WINDOW OPERATION

WITH THE IGNITION SW TURNED FROM ON TO OFF, THE THEFT DETERRENT ECU OPERATES AND CURRENT FLOWS FROM **DOOR** FUSE TO **TERMINAL (A)9** OF THE ECU OR **DOME** FUSE TO **TERMINAL (B)1** OF THE ECU → **TERMINAL (A)6** → **TERMINAL 1** OF POWER MAIN RELAY → **TERMINAL 2** → **GROUND** FOR ABOUT **60** SECONDS. THE SAME AS NORMAL OPERATION, THE CURRENT FLOWS FROM **DOOR** FUSE → **TERMINAL 5** OF THE POWER MAIN RELAY → **TERMINAL 3** → **TERMINAL 4** OF THE POWER WINDOW MASTER SW AND **TERMINAL 4** OF THE POWER WINDOW CONTROL SW RH. AS A RESULT, FOR ABOUT **60** SECONDS AFTER THE IGNITION SW IS TURNED OFF, THE FUNCTIONING OF THIS RELAY MAKES IT POSSIBLE TO RAISE AND LOWER THE POWER WINDOW. ALSO, BY OPENING THE FRONT DOOR (DOOR OPEN DETECTION SW ON) WITHIN ABOUT **60** SECONDS AFTER TURNING THE IGNITION SW TO OFF, A SIGNAL IS INPUT TO **TERMINAL (B)19, (B)7** OF THEFT DETERRENT ECU. AS A RESULT, THE ECU TURNED OFF AND UP AND DOWN MOVEMENT OF THE POWER WINDOW STOPS.

SERVICE HINTS

P 8 POWER WINDOW MASTER SW

4–GROUND : APPROX. **12** VOLTS WITH IGNITION SW AT **ON** POSITION
8–GROUND : ALWAYS CONTINUOUS
10–GROUND : APPROX. **12** VOLTS WITH IGNITION SW **ON** AND MASTER SW (DRIVER'S WINDOW) AT **UP** POSITION
9–GROUND : APPROX. **12** VOLTS WITH IGNITION SW **ON** AND MASTER SW (DRIVER'S WINDOW) AT **DOWN** OR **AUTO DOWN** POSITION

WINDOW LOCK SW

OPEN WITH THE WINDOW LOCK SW AT **LOCK** POSITION

: PARTS LOCATION

CODE	SEE PAGE	CODE	SEE PAGE	CODE		SEE PAGE
D10	30	**P 8**	30	**T 7**	A	29
D11	30	**P 9**	30	**T13**	B	29
P 7	30	**P10**	30			

: RELAY BLOCKS

CODE	SEE PAGE	RELAY BLOCKS (RELAY BLOCK LOCATION)
2	22	R/B NO. 2 (ENGINE COMPARTMENT LEFT)

: JUNCTION BLOCK AND WIRE HARNESS CONNECTOR

CODE	SEE PAGE	JUNCTION BLOCK AND WIRE HARNESS (CONNECTOR LOCATION)
1B	20	ENGINE ROOM MAIN WIRE AND J/B NO. 1 (LEFT KICK PANEL)
1D	20	FRONT DOOR LH WIRE AND J/B NO.1 (LEFT KICK PANEL)
1E	20	INSTRUMENT PANEL WIRE AND J/B NO.1 (LEFT KICK PANEL)
1H	20	COWL WIRE AND J/B NO.1 (LEFT KICK PANEL)
1I		
1J		

: CONNECTOR JOINING WIRE HARNESS AND WIRE HARNESS

CODE	SEE PAGE	JOINING WIRE HARNESS AND WIRE HARNESS (CONNECTOR LOCATION)
IC2	36	FLOOR NO. 2 WIRE AND COWL WIRE (LEFT KICK PANEL)
ID1	36	FRONT DOOR LH WIRE AND INSTRUMENT PANEL WIRE (LEFT KICK PANEL)
IF1	36	INSTRUMENT PANEL WIRE AND COWL WIRE (INSTRUMENT PANEL REINFORCEMENT LH)
IF2		
IF3	36	INSTRUMENT PANEL WIRE AND COWL WIRE (RIGHT KICK PANEL)
IL1	38	FRONT DOOR RH WIRE AND INSTRUMENT PANEL WIRE (LEFT KICK PANEL)

: GROUND POINTS

CODE	SEE PAGE	GROUND POINTS LOCATION
IE	36	LEFT KICK PANEL
IG	36	RIGHT KICK PANEL
IH		
BI	40	LEFT QUATER PILLER

D10

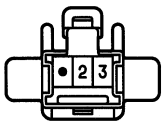

D11

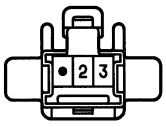

P 7

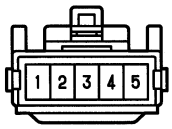

P 8

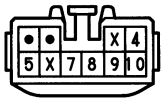

P 9 GRAY



P10 GRAY



T 7 (A) ORANGE

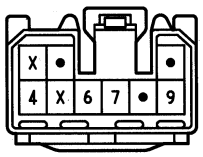

T13 (B) ORANGE

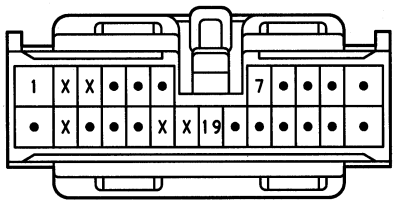

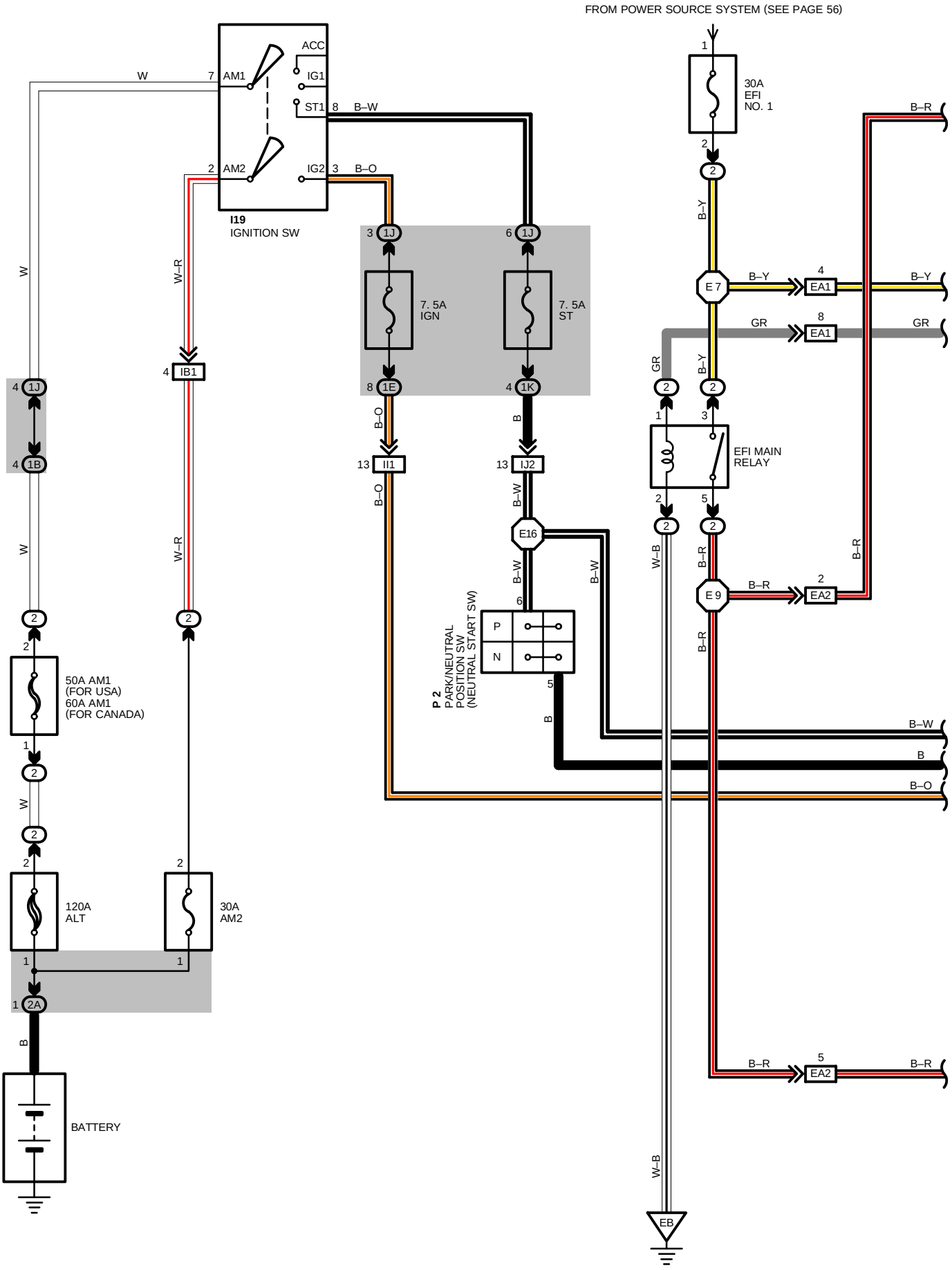
FROM POWER SOURCE SYSTEM (SEE PAGE 56)
I19
IGNITION SW
ACC
IG1
ST1
AM1
AM2
IG2
W
B–W
B–O
W–R
7. 5A
IGN
7. 5A
ST
IB1
1J
1B
1E
1K
II1
IJ2
E16
E7
E9
EA1
EA2
B–Y
GR
B–R
B
W–B
30A
EFI
NO. 1
EFI MAIN
RELAY
P 2
PARK/NEUTRAL
POSITION SW
(NEUTRAL START SW)
P
N
50A AM1
(FOR USA)
60A AM1
(FOR CANADA)
120A
ALT
30A
AM2
2A
BATTERY
EB

*1 : ENGINE AND ELACTRONICALLY CONTROLLED TRANSMISSION ECU

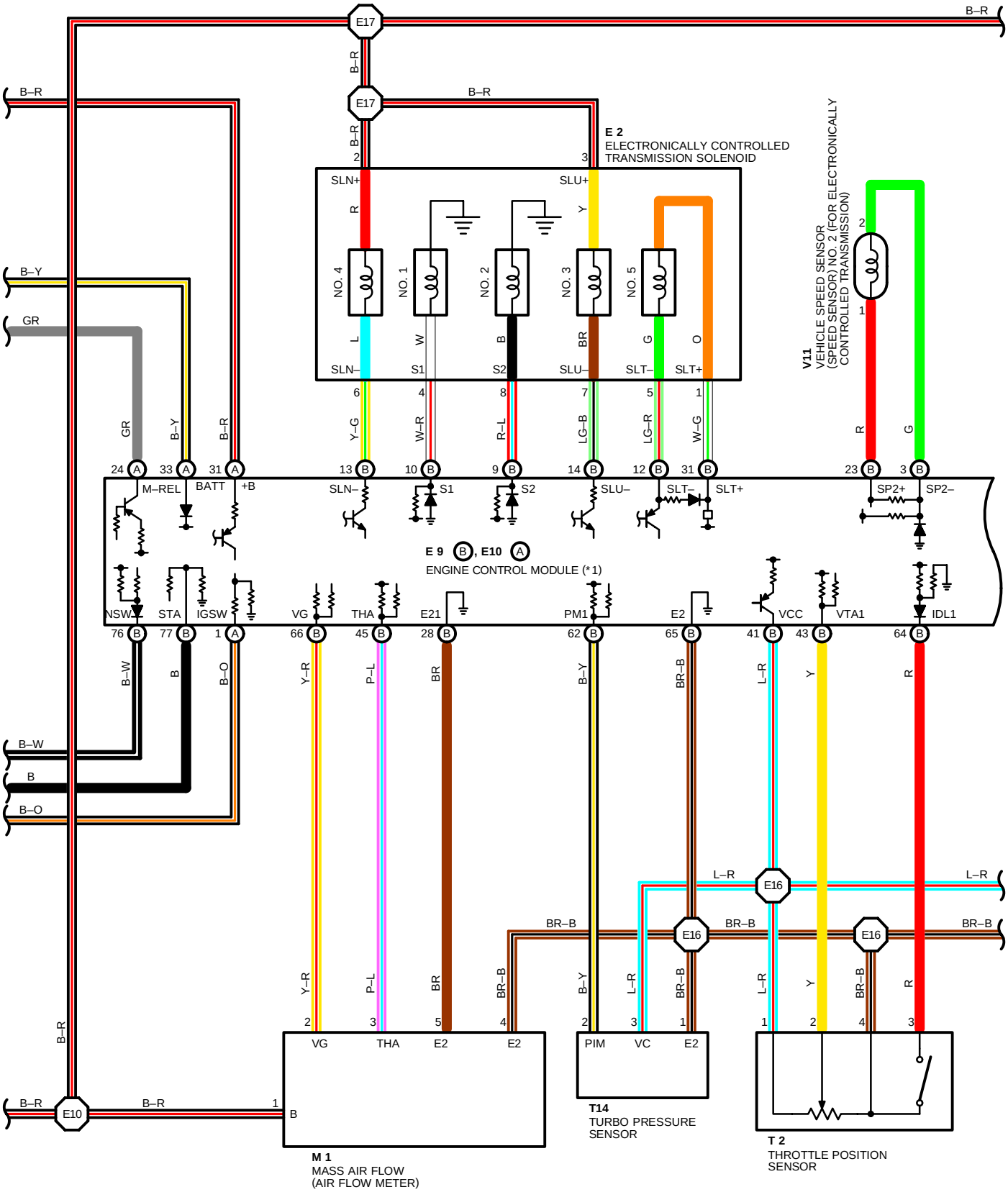

ELECTRONICALLY CONTROLLED TRANSMISSION AND A/T INDICATOR (FOR 2JZ–GTE)

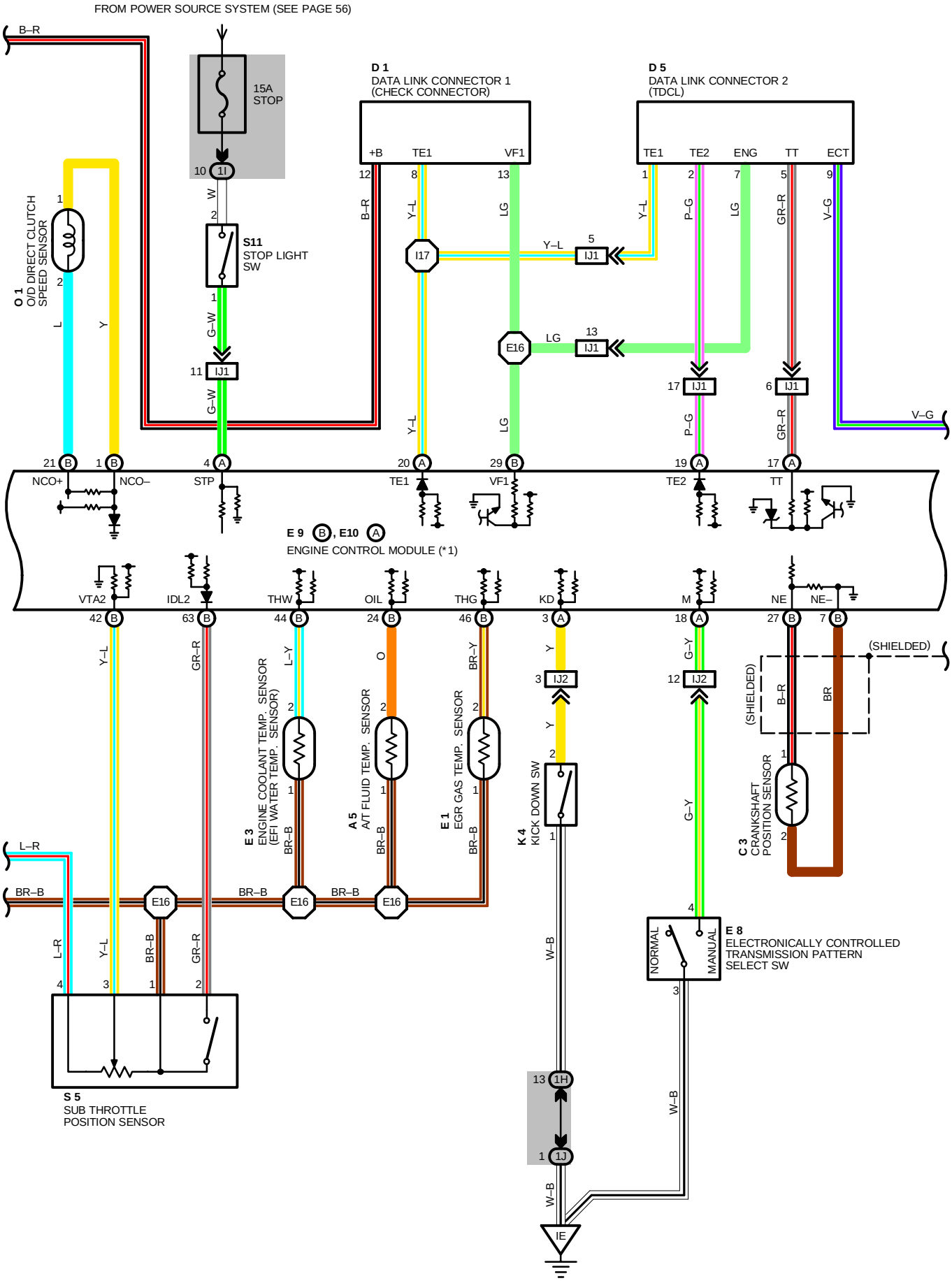

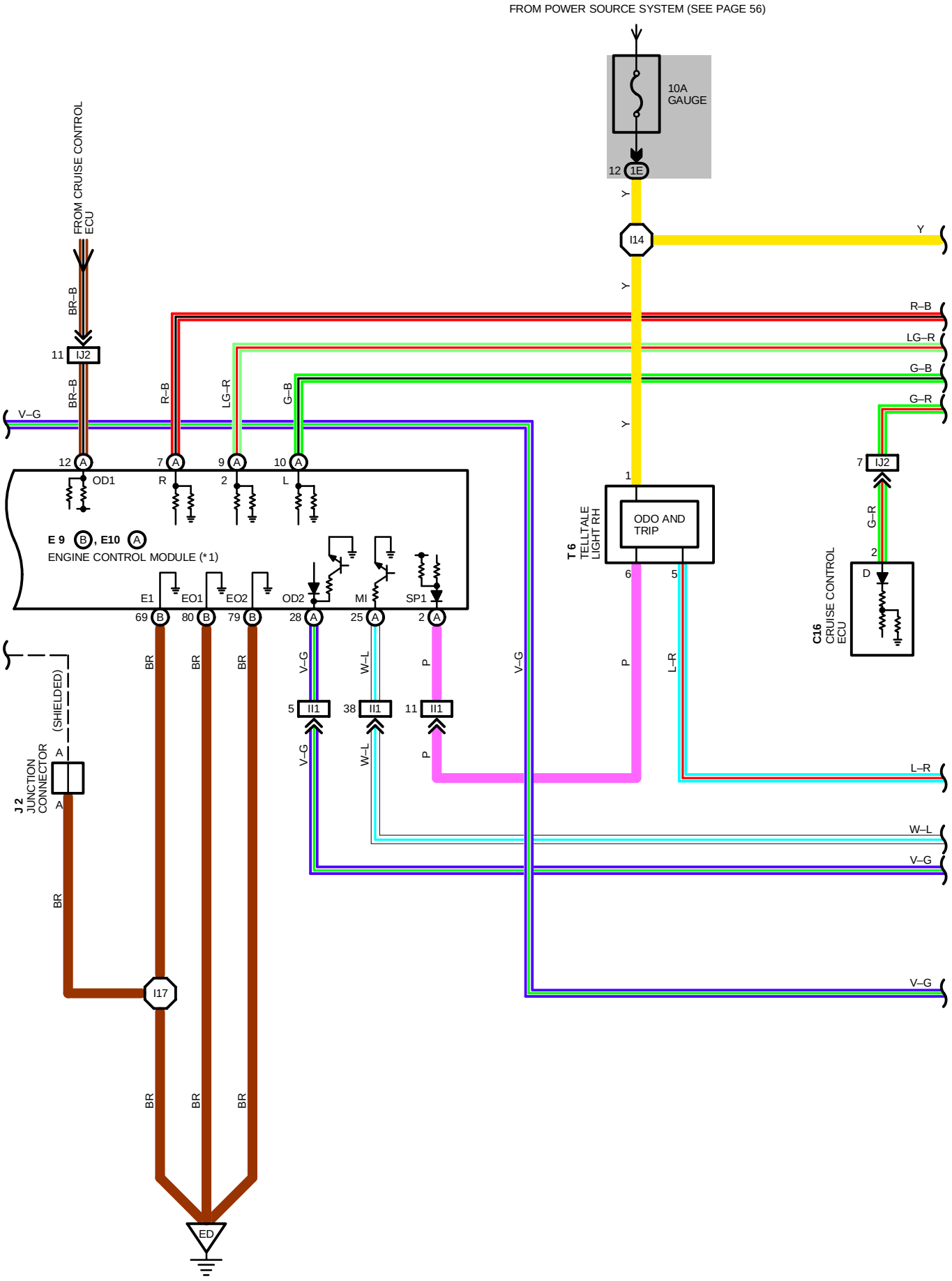
FROM POWER SOURCE SYSTEM (SEE PAGE 56)
10A
GAUGE
12 1E
I14
FROM CRUISE CONTROL ECU
BR–B
11 IJ2
BR–B
R–B
LG–R
G–B
V–G
12 A OD1
7 A R
9 A 2
10 A L
E 9 B, E10 A
ENGINE CONTROL MODULE (*1)
E1
EO1
EO2
OD2
MI
SP1
69 B
80 B
79 B
28 A
25 A
2 A
BR
V–G
W–L
P
L–R
5 II1
38 II1
11 II1
(SHIELDED)
J 2
JUNCTION
CONNECTOR
A
A
I17
ED
Y
R–B
LG–R
G–B
G–R
1
ODO AND
TRIP
T 6
TELLTALE
LIGHT RH
6
5
7 IJ2
G–R
2
D
C16
CRUISE CONTROL
ECU

ELECTRONICALLY CONTROLLED TRANSMISSION AND A/T INDICATOR (FOR 2JZ–GTE)

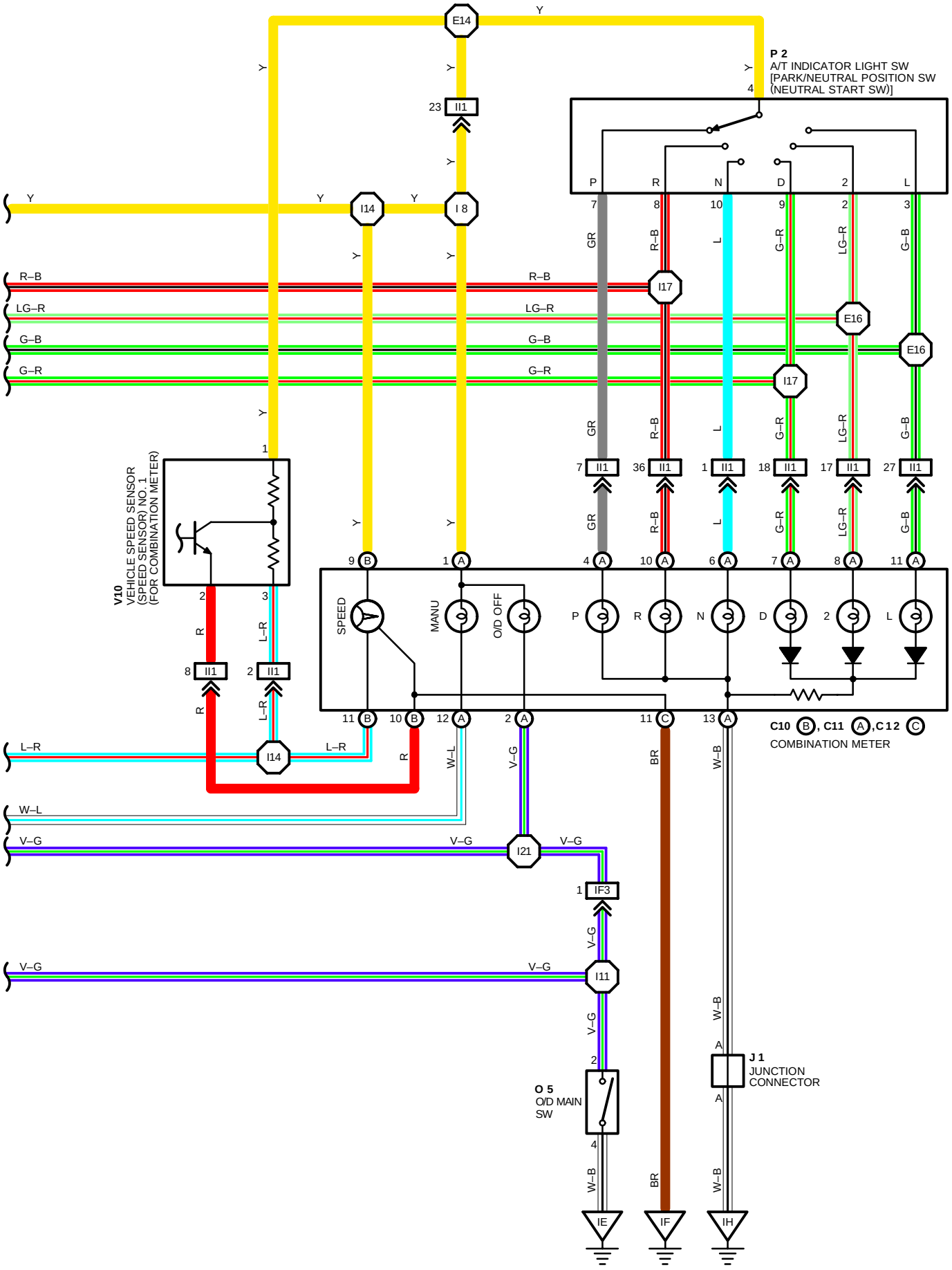

SYSTEM OUTLINE

THIS SYSTEM ELECTRICALLY CONTROLS THE LINE PRESSURE, THROTTLE PRESSURE, LOCK–UP PRESSURE AND ACCUMULATOR PRESSURE ETC. THROUGH THE SOLENOID VALVE. THE ELECTRONICALLY CONTROLLED TRANSMISSION IS A SYSTEM WHICH PRECISELY CONTROLS GEAR SHIFT TIMING AND LOCK–UP TIMING IN RESPONSE TO THE VEHICLE'S DRIVING CONDITIONS AND THE ENGINE OPERATING CONDITIONS DETECTED BY VARIOUS SENSORS, MAKING SMOOTH DRIVING POSSIBLE BY SHIFT SELECTION FOR EACH GEAR WHICH IS THE MOST APPROPRIATE TO THE DRIVING CONDITIONS AT THAT TIME, AND CONTROLS THE ENGINE TORQUE DURING SHIFTING TO ACHIEVE OPTIMUM SHIFT FEELING.

1. GEAR SHIFT OPERATION

WHEN DRIVING, THE ENGINE WARM UP CONDITION IS INPUT AS A SIGNAL TO **TERMINAL (B)44** OF THE ENGINE CONTROL MODULE (ENGINE AND ELECTRONICALLY CONTROLLED TRANSMISSION ECU) FROM THE ENGINE COOLANT TEMP. SENSOR (EFI WATER TEMP. SENSOR) AND THE VEHICLE SPEED SIGNAL FROM VEHICLE SPEED SENSOR (SPEED SENSOR) NO.2 IS INPUT TO **TERMINAL (B) 23** OF THE ENGINE CONTROL MODULE (ENGINE AND ELECTRONICALLY CONTROLLED TRANSMISSION ECU). AT THE SAME TIME, THE THROTTLE VALVE OPENING SIGNAL FROM THE THROTTLE POSITION SENSOR (MAIN) IS INPUT TO **TERMINAL (B)43** OF THE ENGINE CONTROL MODULE (ENGINE AND ELECTRONICALLY CONTROLLED TRANSMISSION ECU) AS THROTTLE ANGLE SIGNAL.

BASED ON THESE SIGNALS, THE ENGINE CONTROL MODULE (ENGINE AND ELECTRONICALLY CONTROLLED TRANSMISSION ECU) SELECTS THE BEST SHIFT POSITION FOR DRIVING CONDITIONS AND SENDS CURRENT TO THE ELECTRONICALLY CONTROLLED TRANSMISSION SOLENOIDS.

WHEN SHIFTING TO 1ST SPEED, THE CURRENT FLOWS FROM **TERMINAL (B)10** OF THE ENGINE CONTROL MODULE (ENGINE AND ELECTRONICALLY CONTROLLED TRANSMISSION ECU) → **TERMINAL 4** OF ELECTRONICALLY CONTROLLED TRANSMISSION SOLENOID → **GROUND** AND CONTINUITY TO NO. 1 SOLENOID CAUSES THE SHIFT (NO. 2 SOLENOID DOES NOT HAVE CONTINUITY AT THIS TIME).

FOR 2ND SPEED, THE CURRENT FLOWS SIMULTANEOUSLY FROM **TERMINAL (B)9** OF THE ENGINE CONTROL MODULE (ENGINE AND ELECTRONICALLY CONTROLLED TRANSMISSION ECU) → **TERMINAL 8** OF ELECTRONICALLY CONTROLLED TRANSMISSION SOLENOID → **GROUND**, AND FROM **TERMINAL (B)10** OF THE ENGINE CONTROL MODULE (ENGINE AND ELECTRONICALLY CONTROLLED TRANSMISSION ECU) → **TERMINAL 4** OF ELECTRONICALLY CONTROLLED TRANSMISSION SOLENOID → **GROUND**, AND CONTINUITY TO NO. 1 AND NO. 2 SOLENOIDS CAUSES THE SHIFT.

FOR 3RD SPEED, THERE IS NO CONTINUITY TO NO. 1 SOLENOID, ONLY TO NO. 2 SOLENOID, CAUSING THE SHIFT.

SHIFTING INTO THE 4TH SPEED (OVERDRIVE) OCCURS WHEN NO CURRENT FLOWS TO NO. 1 AND NO. 2 SOLENOIDS. THE NO. 4 SOLENOID (FOR ACCUMULATOR BACK PRESSURE MODULATION) IS INSTALLED TO ADJUST THE BACK PRESSURE ON THE ACCUMULATOR AND CONTROLS THE HYDRAULIC PRESSURE DURING SHIFTING AND LOCK–UP IN ORDER TO PROVIDE SMOOTH SHIFTING WITH LITTLE SHIFT SHOCK.

2. LOCK–UP OPERATION

WHEN THE ENGINE CONTROL MODULE (ENGINE AND ELECTRONICALLY CONTROLLED TRANSMISSION ECU) DECIDES, BASED ON EACH SIGNAL, THAT THE LOCK–UP CONDITION HAS BEEN MET, THE CURRENT THROUGH **EFI NO. 1** FUSE FLOWS FROM THE EFI MAIN RELAY → **TERMINAL 3** OF THE ELECTRONICALLY CONTROLLED TRANSMISSION SOLENOID → **TERMINAL 7** → **TERMINAL (B)14** OF THE ENGINE CONTROL MODULE (ENGINE AND ELECTRONICALLY CONTROLLED TRANSMISSION ECU) → **GROUND,** SO CONTINUITY TO NO. 3 (FOR LOCK–UP) CAUSES LOCK–UP.

3. STOP LIGHT SW CIRCUIT

IF THE BRAKE PEDAL IS DEPRESSED (STOP LIGHT SW ON) WHEN DRIVING IN LOCK–UP CONDITION, A SIGNAL IS INPUT TO **TERMINAL (A)4** OF THE ENGINE CONTROL MODULE (ENGINE AND ELECTRONICALLY CONTROLLED TRANSMISSION ECU). THE ENGINE CONTROL MODULE (ENGINE AND ELECTRONICALLY CONTROLLED TRANSMISSION ECU) OPERATES AND CUTS THE CURRENT TO THE SOLENOID TO RELEASE LOCK–UP.

4. OVERDRIVE CIRCUIT

***** O/D MAIN SW ON

WHEN THE O/D MAIN SW IS TURNED ON (SW POINT IS OPEN), A SIGNAL IS INPUT TO **TERMINAL (A)28** OF THE ENGINE CONTROL MODULE (ENGINE AND ELECTRONICALLY CONTROLLED TRANSMISSION ECU) AND THE ELECTRONICALLY CONTROLLED TRANSMISSION CAUSES SHIFT TO OVERDRIVE WHEN THE CONDITIONS FOR OVERDRIVE ARE MET.

***** O/D MAIN SW OFF

WHEN THE O/D MAIN SW IS TURNED OFF (SW POINT IS CLOSED), THE CURRENT FLOWING THROUGH THE O/D OFF INDICATOR LIGHT FLOWS TO **GROUND** BY WAY OF THE O/D MAIN SW AND CAUSES THE O/D OFF INDICATOR LIGHT TO LIGHT UP. AT THE SAME TIME, A SIGNAL IS INPUT TO **TERMINAL (A)28** OF THE ENGINE CONTROL MODULE (ENGINE AND ELECTRONICALLY CONTROLLED TRANSMISSION ECU) AND THE ELECTRONICALLY CONTROLLED TRANSMISSION PREVENTS SHIFT INTO OVERDRIVE.

5. ELECTRONICALLY CONTROLLED TRANSMISSION PATTERN SELECT SW CIRCUIT

WHEN THE ELECTRONICALLY CONTROLLED TRANSMISSION PATTERN SELECT SW IS SWICHED FROM NORMAL TO MANUAL, A SIGNAL IS INPUT TO **TERMINAL (A)18** OF THE ENGINE CONTROL MODULE (ENGINE AND ELECTRONICALLY CONTROLLED TRANSMISSION ECU). INPUT OF THIS SIGNAL CAUSES CURRENT TO FLOW FROM THE **GAUGE** FUSE TO **TERMINAL (A)1** OF COMBINATION METER → **TERMINAL (A)12** → **TERMINAL (A)25** OF ENGINE CONTROL MODULE (ENGINE AND ELECTRONICALLY CONTROLLED TRANSMISSION ECU) → **GROUND**, LIGHTING UP THE INDICATOR LIGHT. IF THE A/T SHIFT LEVER IS THEN SHIFTED TO **"2"** POSITION, THE ENGINE CONTROL MODULE (ENGINE AND ELECTRONICALLY CONTROLLED TRANSMISSION ECU) ENABLES THE VEHICLE TO START OFF WITH THE TRANSMISSION IS 2ND GEAR, THUS PERMITTING EASING STARTING OFF AND DRIVING ON SLIPPERY ROADS.

6. CRUISE CONTROL

WHEN CRUISE CONTROL OPERATION IS SELECTED A SIGNAL IS INPUT TO **TERMINAL (A)12** OF THE ENGINE CONTROL MODULE (ENGINE AND ELECTRONICALLY CONTROLLED TRANSMISSION ECU) FROM CRUISE CONTROL. ECU. AS A RESULT, THE ENGINE CONTROL MODULE (ENGINE AND ELECTRONICALLY CONTROLLED TRANSMISSION ECU) OPERATES AND CONTROLS OVERDRIVE, LOCK–UP AND SO ON FOR SMOOTH DRIVING.

ELECTRONICALLY CONTROLLED TRANSMISSION AND A/T INDICATOR (FOR 2JZ–GTE)

SERVICE HINTS

E 2 ELECTRONICALLY CONTROLLED TRANSMISSION SOLENOID

8– GROUND : APPROX. **13.2**
4– GROUND : APPROX. **13.2**
6–2 : APPROX. **8.3**
7–3 : APPROX. **3.8**
1–5 : APPROX. **3.8**

E 3 ENGINE COOLANT TEMP. SENSOR (EFI WATER TEMP. SENSOR)

1– 2: **10–20** K (**–20**˚C, **–4**˚F)
4– 7 K (**0**˚C, **32**˚F)
2– 3 K (**20**˚C, **68**˚F)
0.9–1.3 K (**40**˚C, **104**˚F)
0.4–0.7 K (**60**˚C, **140**˚F)
0.2–0.4 K (**80**˚C, **176**˚F)

E 9(B), E10(A) ENGINE CONTROL MODULE (ENGINE AND ELECTRONICALLY CONTROLLED TRANSMISSION ECU)

BATT–E1 : ALWAYS **9–14** VOLTS
IGSW–E1 : **9–14** VOLTS WITH IGNITION SW ON
+B–E1 : **9–14** VOLTS WITH IGNITION SW ON
IDL1–E1 : **0 –1.5** VOLTS WITH IGNITION SW ON AND THROTTLE VALVE FULLY CLOSED
9–14 VOLTS WITH IGNITION SW ON AND THROTTLE VALVE FULLY OPEN
VTA1–E1 : **0.3– 0.8** VOLTS WITH IGNITION SW ON AND THROTTLE VALVE FULLY CLOSED
3.2–4.9 VOLTS WITH IGNITION SW ON AND THROTTLE VALVE FULLY OPEN
STA–E1 : **6–14** VOLTS WITH ENGINE CRANKING
M–REL–E1 : **9–14** VOLTS WITH IGNITION SW ON
VCC–E1 : **4.5–5.5** VOLTS WITH IGNITION SW ON
L–E1 : APPROX. **7.5– 14.0** VOLTS WITH SHIFT LEVER AT **“L”** POSITION
2–E1 : APPROX. **7.5– 14.0** VOLTS WITH SHIFT LEVER AT **“2”** POSITION
R–E1 : APPROX. **7.5– 14.0** VOLTS WITH SHIFT LEVER AT **“R”** POSITION

O 1 O/D DIRECT CLUTCH SPEED SENSOR

1–2 : APPROX. **620**

V11 VEHICLE SPEED SENSOR (SPEED SENSOR) NO. 2 (FOR ELECTRONICALLY CONTROLLED TRANSMISSION)

1–2 : APPROX. **620**

E 8 ELECTRONICALLY CONTROLLED TRANSMISSION PATTERN SELECT SW

4–3 : CLOSED WITH ELECTRONICALLY CONTROLLED TRANSMISSION PATTERN SELECT SW AT **MANUAL** POSITION

: PARTS LOCATION

CODE	SEE PAGE	CODE	SEE PAGE	CODE	SEE PAGE
A 5	24 (2JZ–GTE)	**E 3**	24 (2JZ–GTE)	**O 5**	29
C 3	24	**E 8**	29	**P 2**	25 (2JZ–GTE)
C10 B	28	**E 9** B	29	**S 5**	25
C11 A	28	**E10** A	29	**S11**	29
C12 **C**	28	**I19**	29	**T 2**	25 (2JZ–GTE)
C16	28	**J 1**	29	**T 6**	29
D 1	24 (2JZ–GTE)	**J 2**	29	**T14**	25
D 5	28	**K 4**	29	**V10**	25 (2JZ–GTE)
E 1	24 (2JZ–GTE)	**M 1**	25	**V11**	25 (2JZ–GTE)
E 2	24 (2JZ–GTE)	**O 1**	25		

: RELAY BLOCKS

CODE	SEE PAGE	RELAY BLOCKS (RELAY BLOCK LOCATION)
2	22	R/B NO. 2 (ENGINE COMPARTMENT LEFT)

: JUNCTION BLOCK AND WIRE HARNESS CONNECTOR

CODE	SEE PAGE	JUNCTION BLOCK AND WIRE HARNESS (CONNECTOR LOCATION)
1B	20	ENGINE ROOM MAIN WIRE AND J/B NO. 1 (LEFT KICK PANEL)
1E	20	INSTRUMENT PANEL WIRE AND J/B NO.1 (LEFT KICK PANEL)
1H	20	COWL WIRE AND J/B NO.1 (LEFT KICK PANEL)
1I		
1J		
1K		
2A	22	BATTERY AND J/B NO.2 (ENGINE COMPARTMENT LEFT)

: CONNECTOR JOINING WIRE HARNESS AND WIRE HARNESS

CODE	SEE PAGE	JOINING WIRE HARNESS AND WIRE HARNESS (CONNECTOR LOCATION)
EA1	32 (2JZ–GTE)	ENGINE WIRE AND ENGINE ROOM MAIN WIRE (NEAR THE R/B NO. 2))
EA2	32	
IB1	36	ENGINE ROOM MAIN WIRE AND COWL WIRE (LEFT KICK PANEL)
IF3	36	INSTRUMENT PANEL WIRE AND COWL WIRE (RIGHT KICK PANEL)
II1	38	ENGINE WIRE AND INSTRUMENT PANEL WIRE (RIGHT KICK PANEL)
IJ1	38	ENGINE WIRE AND COWL WIRE (RIGHT KICK PANEL)
IJ2		

: GROUND POINTS

CODE	SEE PAGE	GROUND POINTS LOCATION
EB	32 (2JZ–GTE)	FRONT SIDE OF LEFT FENDER
ED	32 (2JZ–GTE)	REAR SIDE OF INTAKE MANIFOLD
IE	36	LEFT KICK PANEL
IF		
IH	36	RIGHT KICK PANEL

: SPLICE POINTS

CODE	SEE PAGE	WIRE HARNESS WITH SPLICE POINTS	CODE	SEE PAGE	WIRE HARNESS WITH SPLICE POINTS
E 7	32	ENGINE ROOM MAIN WIRE	**I 8**	38	INSTRUMENT PANEL WIRE
E 9			**I11**	38	COWL WIRE
E10	32	ENGINE WIRE	**I14**	38	INSTRUMENT PANEL WIRE
E14			**I17**	38	ENGINE WIRE
E16			**I21**	38	INSTRUMENT PANEL WIRE
E17					

A 5 GRAY

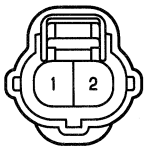

C 3 DARK GRAY



C10 (B) BLUE

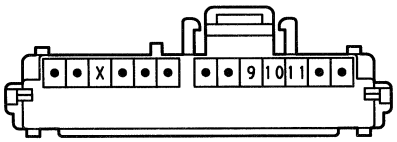

C11 (A) BROWN

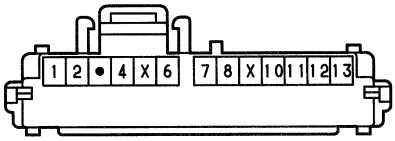

C12 (C)

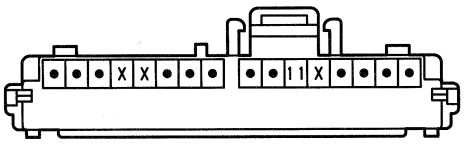

C16 GREEN

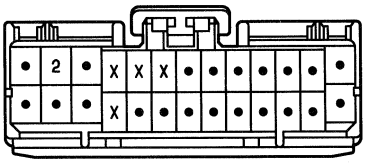

D 1 BLACK

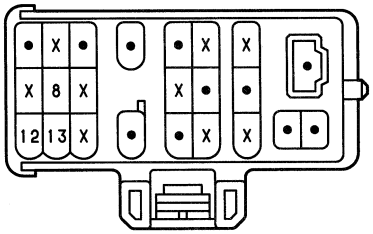

D 5 DARK GRAY

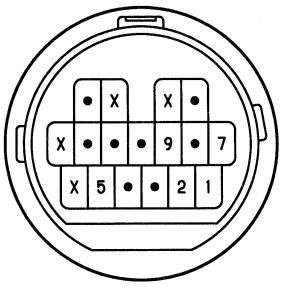

E 1 DARK GRAY



E 2 GRAY

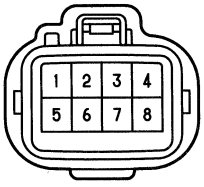

E 3 DARK GRAY



E 8

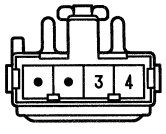

E 9 (B) DARK GRAY

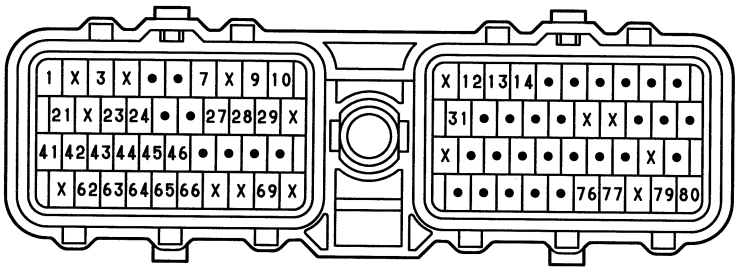

E10 (A) DARK GRAY

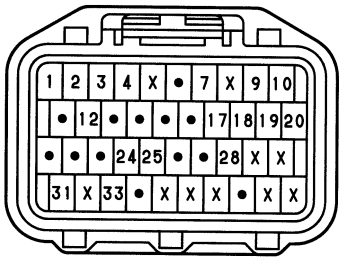

I19

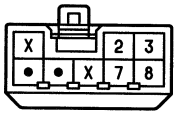

J 1

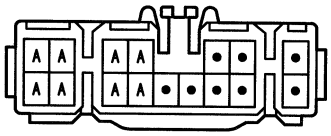

(HINT:SEE PAGE 7)

J 2

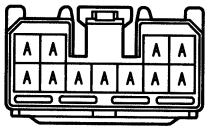

(HINT:SEE PAGE 7)

K 4 BLACK



M 1 BLACK

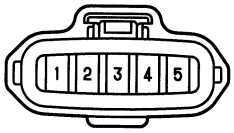

O 1 BLACK



O 5 BLUE

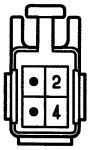

P 2 GRAY

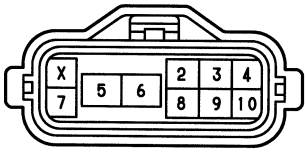

S 5 BLACK



S11 BLUE

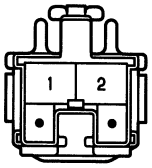

T 2 BLACK



T 6

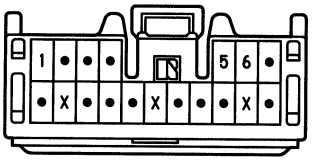

T14 BLACK



V10 BLACK



V11 BLACK



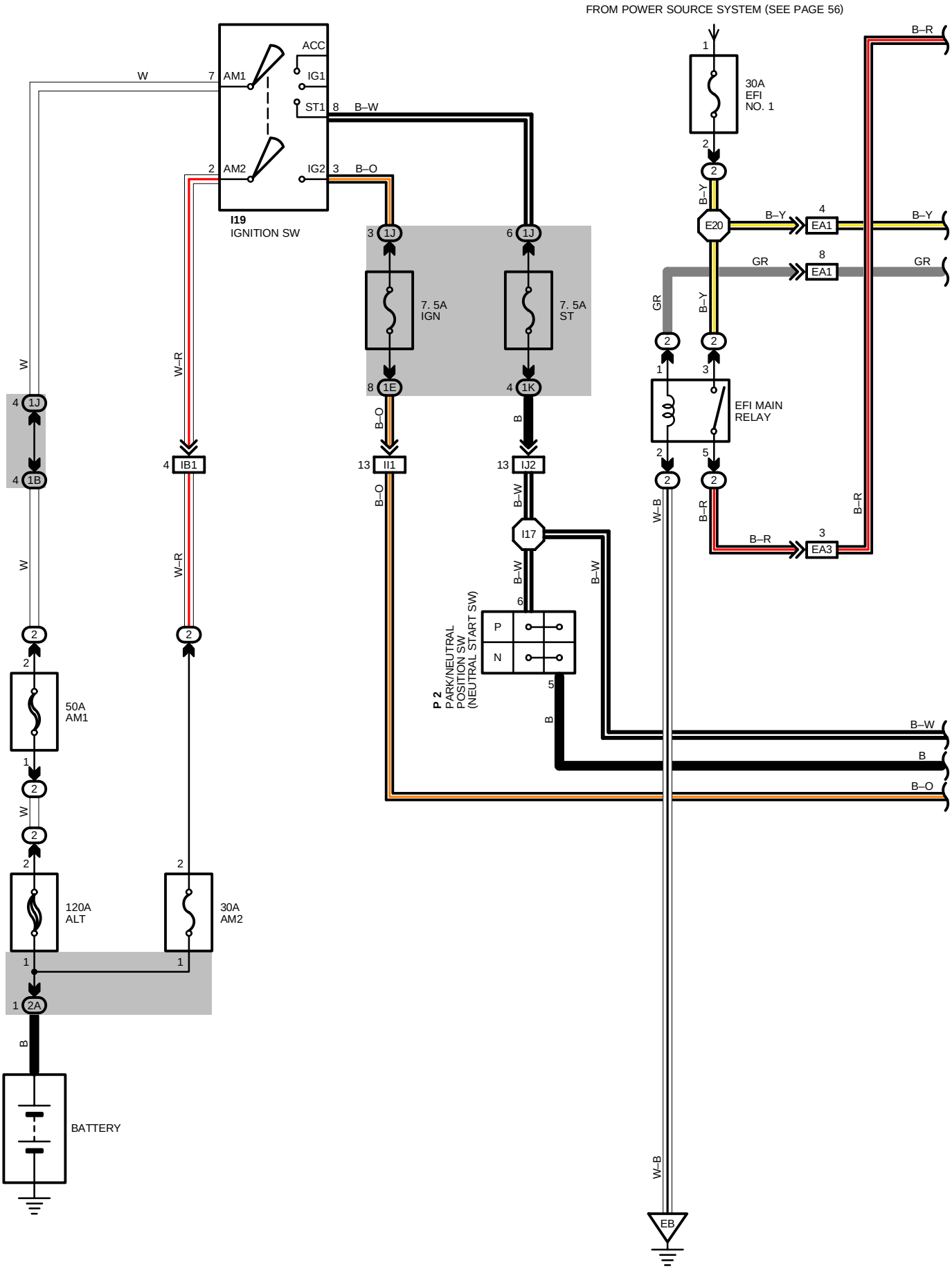
FROM POWER SOURCE SYSTEM (SEE PAGE 56)
I19
IGNITION SW
ACC
IG1
ST1
AM1
AM2
IG2
W
B–W
B–O
7. 5A
IGN
7. 5A
ST
W–R
B–O
B
B–W
I17
P 2
PARK/NEUTRAL
POSITION SW
(NEUTRAL START SW)
P
N
50A
AM1
120A
ALT
30A
AM2
BATTERY
30A
EFI
NO. 1
B–R
B–Y
E20
EA1
GR
EFI MAIN
RELAY
EA3
W–B
EB

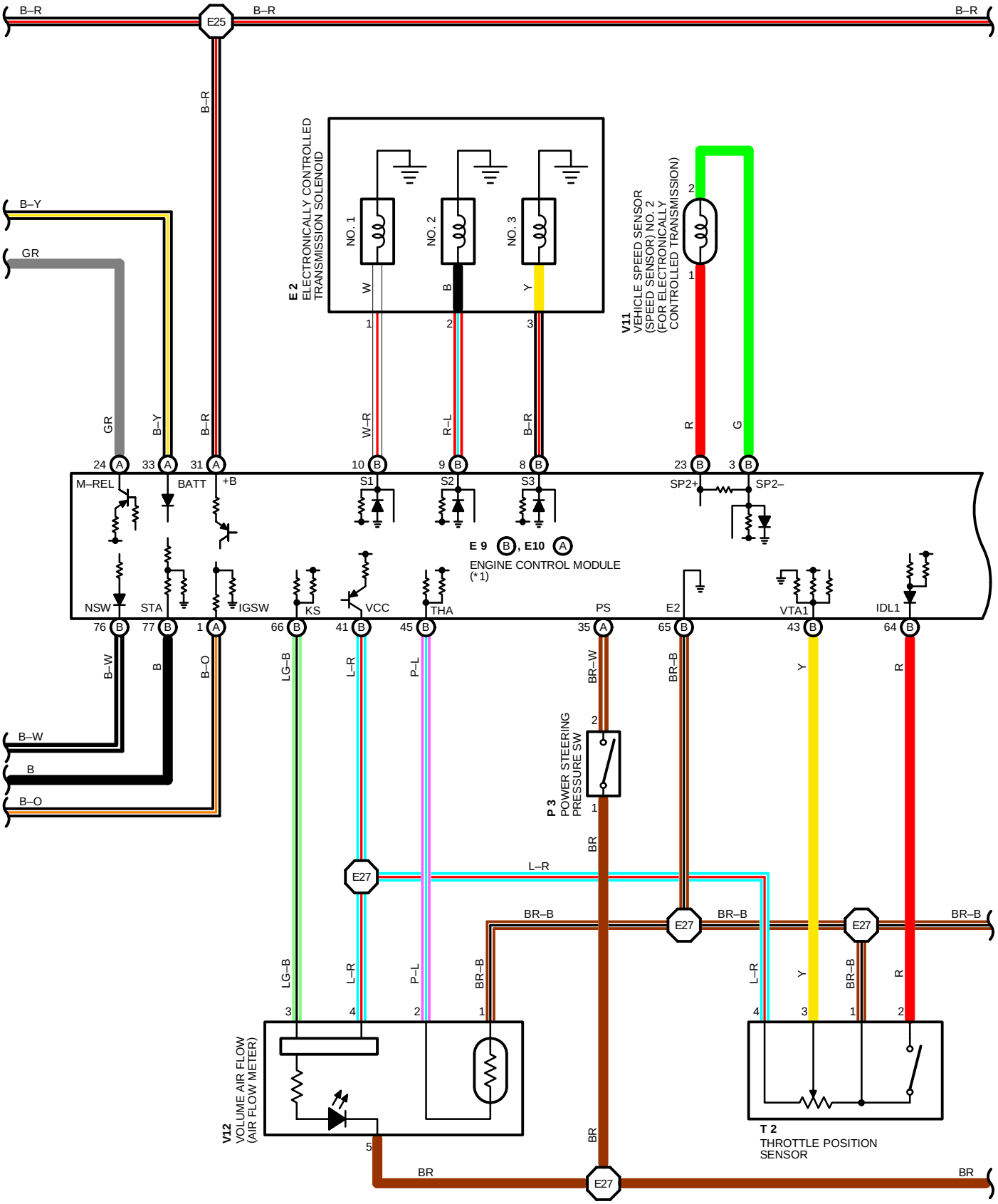
B–R
E25
B–R
B–R
B–Y
GR
E 2
ELECTRONICALLY CONTROLLED TRANSMISSION SOLENOID
NO. 1
NO. 2
NO. 3
W
B
Y
1
2
3
V11
VEHICLE SPEED SENSOR (SPEED SENSOR) NO. 2 (FOR ELECTRONICALLY CONTROLLED TRANSMISSION)
2
1
R
G
GR
B–Y
B–R
W–R
R–L
B–R
24 A
33 A
31 A
10 B
9 B
8 B
23 B
3 B
M–REL
BATT
+B
S1
S2
S3
SP2+
SP2–
E 9 B , E10 A
ENGINE CONTROL MODULE
(*1)
NSW
STA
IGSW
KS
VCC
THA
PS
E2
VTA1
IDL1
76 B
77 B
1 A
66 B
41 B
45 B
35 A
65 B
43 B
64 B
B–W
B
B–O
LG–B
L–R
P–L
BR–W
BR–B
Y
R
B–W
B
B–O
P 3
POWER STEERING PRESSURE SW
2
1
BR
E27
L–R
BR–B
E27
BR–B
E27
BR–B
LG–B
L–R
P–L
BR–B
L–R
Y
BR–B
R
3
4
2
1
4
3
1
2
V12
VOLUME AIR FLOW (AIR FLOW METER)
5
BR
BR
E27
BR
T 2
THROTTLE POSITION SENSOR

ELECTRONICALLY CONTROLLED TRANSMISSION AND A/T INDICATOR (FOR 2JZ–GE)

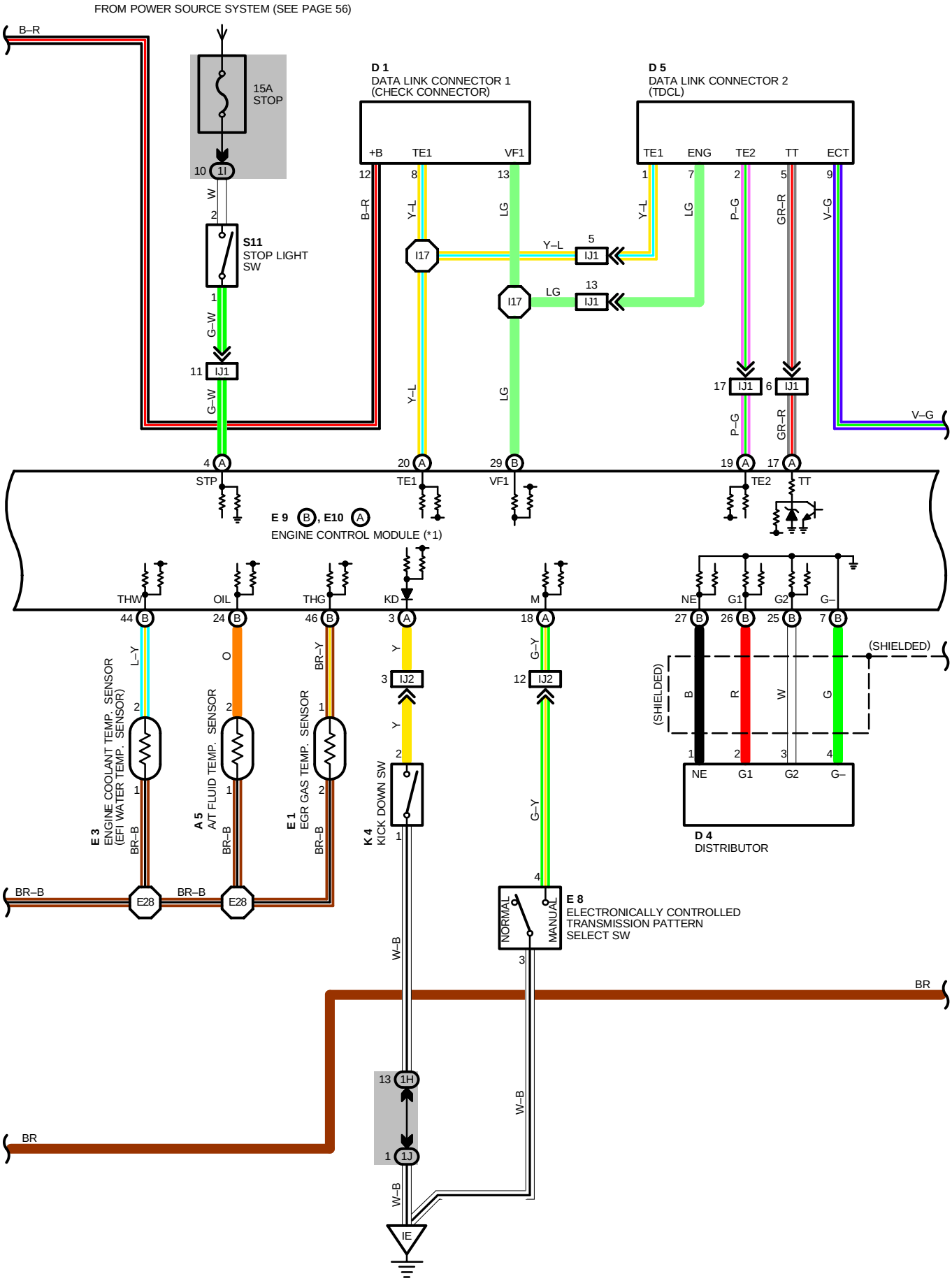

*1 : ENGINE AND ELECTRONICALLY CONTROLLED TRANSMISSION ECU

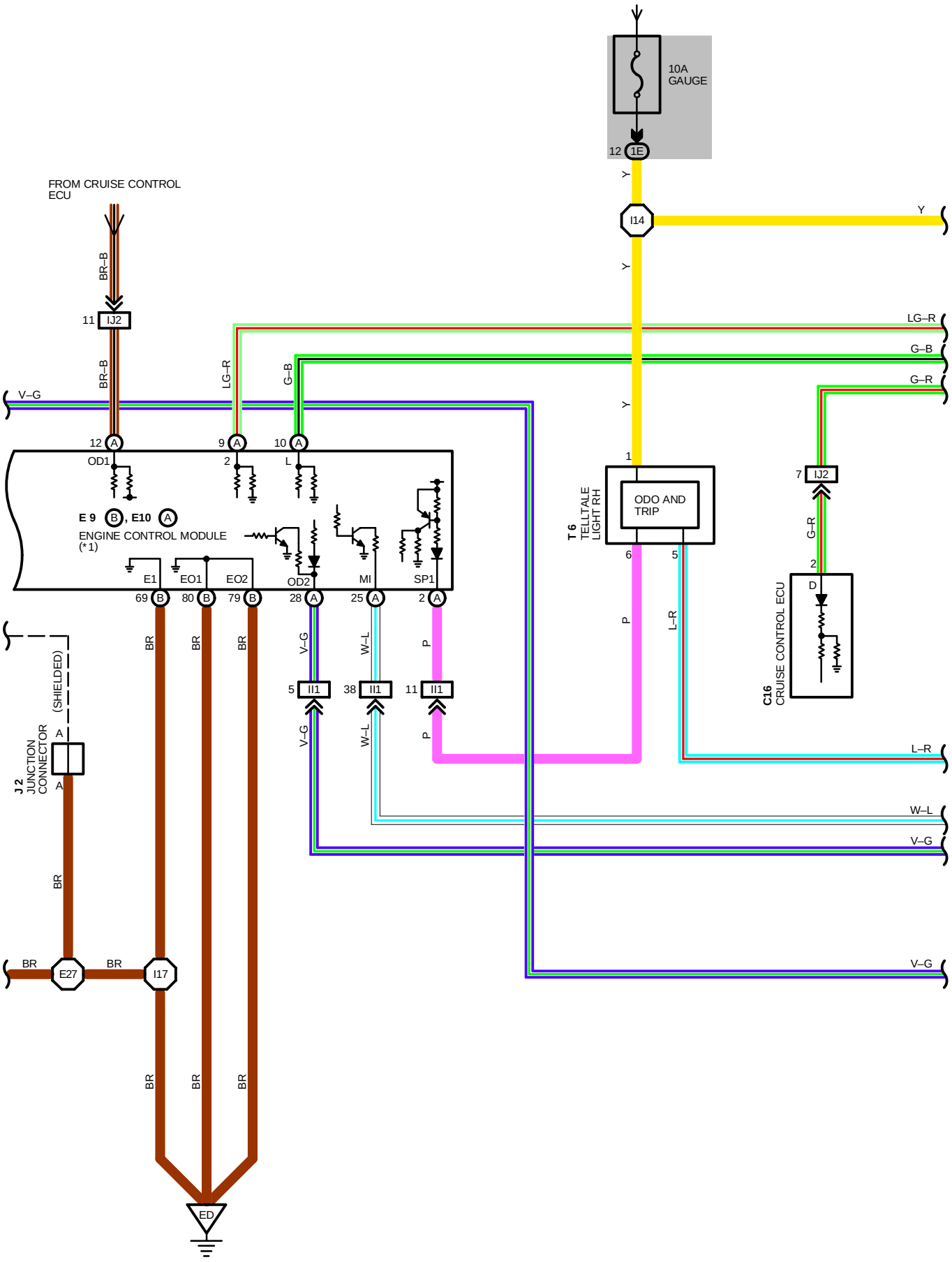

ELECTRONICALLY CONTROLLED TRANSMISSION AND A/T INDICATOR (FOR 2JZ–GE)

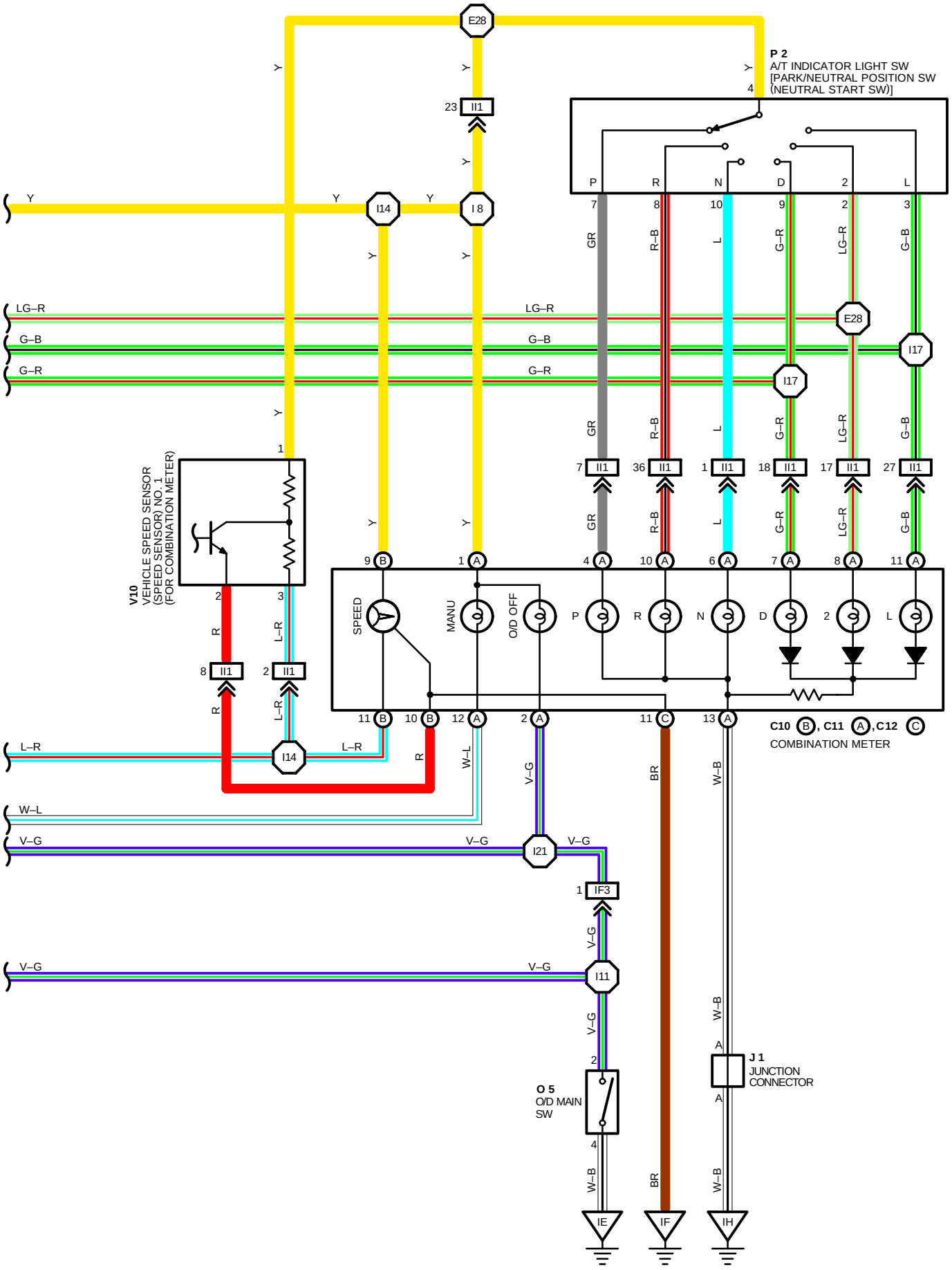

SYSTEM OUTLINE

THIS SYSTEM ELECTRICALLY CONTROLS THE LINE PRESSURE, THROTTLE PRESSURE, LOCK–UP PRESSURE AND ACCUMULATOR PRESSURE ETC. THROUGH THE SOLENOID VALVE. THE ELECTRONICALLY CONTROLLED TRANSMISSION IS A SYSTEM WHICH PRECISELY CONTROLS GEAR SHIFT TIMING AND LOCK–UP TIMING IN RESPONSE TO THE VEHICLE'S DRIVING CONDITIONS AND THE ENGINE OPERATING CONDITIONS DETECTED BY VARIOUS SENSORS, MAKING SMOOTH DRIVING POSSIBLE BY SHIFT SELECTION FOR EACH GEAR WHICH IS THE MOST APPROPRIATE TO THE DRIVING CONDITIONS AT THAT TIME, AND CONTROLS THE ENGINE TORQUE DURING SHIFTING TO ACHIEVE OPTIMUM SHIFT FEELING.

1. GEAR SHIFT OPERATION

WHEN DRIVING, THE ENGINE WARM UP CONDITION IS INPUT AS A SIGNAL TO **TERMINAL (B)44** OF THE ENGINE CONTROL MODULE (ENGINE AND ELECTRONICALLY CONTROLLED TRANSMISSION ECU) FROM THE ENGINE COOLANT TEMP. SENSOR (EFI WATER TEMP. SENSOR) AND THE VEHICLE SPEED SIGNAL FROM VEHICLE SPEED SENSOR (SPEED SENSOR) NO.2 IS INPUT TO **TERMINAL (B)23** OF THE ENGINE CONTROL MODULE (ENGINE AND ELECTRONICALLY CONTROLLED TRANSMISSION ECU). AT THE SAME TIME, THE THROTTLE VALVE OPENING SIGNAL FROM THE THROTTLE POSITION SENSOR IS INPUT TO **TERMINAL (B)43** OF THE ENGINE CONTROL MODULE (ENGINE AND ELECTRONICALLY CONTROLLED TRANSMISSION ECU) AS THROTTLE ANGLE SIGNAL.

BASED ON THESE SIGNALS, THE ENGINE CONTROL MODULE (ENGINE AND ELECTRONICALLY CONTROLLED TRANSMISSION ECU) SELECTS THE BEST SHIFT POSITION FOR DRIVING CONDITIONS AND SENDS CURRENT TO THE ELECTRONICALLY CONTROLLED TRANSMISSION SOLENOIDS. WHEN SHIFTING TO 1ST SPEED, THE CURRENT FLOWS FROM **TERMINAL (B)10** OF THE ENGINE CONTROL MODULE (ENGINE AND ELECTRONICALLY CONTROLLED TRANSMISSION ECU) → **TERMINAL 1** OF ELECTRONICALLY CONTROLLED TRANSMISSION SOLENOID → **GROUND** AND CONTINUITY TO NO. 1 SOLENOID CAUSES THE SHIFT (NO. 2 SOLENOID DOES NOT HAVE CONTINUITY AT THIS TIME).

FOR 2ND SPEED, THE CURRENT FLOWS SIMULTANEOUSLY FROM **TERMINAL (B)9** OF THE ENGINE CONTROL MODULE (ENGINE AND ELECTRONICALLY CONTROLLED TRANSMISSION ECU) → **TERMINAL 2** OF ELECTRONICALLY CONTROLLED TRANSMISSION SOLENOID → **GROUND**, AND FROM **TERMINAL (B)10** OF THE ENGINE CONTROL MODULE (ENGINE AND ELECTRONICALLY CONTROLLED TRANSMISSION ECU) → **TERMINAL 1** OF ELECTRONICALLY CONTROLLED TRANSMISSION SOLENOID → **GROUND**, AND CONTINUITY TO NO. 1 AND NO. 2 SOLENOIDS CAUSES THE SHIFT.

FOR 3RD SPEED, THERE IS NO CONTINUITY TO NO. 1 SOLENOID, ONLY TO NO. 2 SOLENOID, CAUSING THE SHIFT.

SHIFTING INTO THE 4TH SPEED (OVERDRIVE) OCCURS WHEN NO CURRENT FLOWS TO NO. 1 AND NO. 2 SOLENOIDS.

2. LOCK–UP OPERATION

WHEN THE ENGINE CONTROL MODULE (ENGINE AND ELECTRONICALLY CONTROLLED TRANSMISSION ECU) JUDGES FROM EACH SIGNAL THAT LOCK–UP OPERATION CONDITIONS HAVE BEEN MET, CURRENT FLOWS FROM **TERMINAL (B)8** OF THE ENGINE CONTROL MODULE (ENGINE AND ELECTRONICALLY CONTROLLED TRANSMISSION ECU) → **TERMINAL 3** OF THE ELECTRONICALLY CONTROLLED TRANSMISSION SOLENOID → **GROUND,** CAUSING CONTINUITY TO THE LOCK–UP SOLENOID AND CAUSING LOCK–UP OPERATION.

3. STOP LIGHT SW CIRCUIT

IF THE BRAKE PEDAL IS DEPRESSED (STOP LIGHT SW ON) WHEN DRIVING IN LOCK–UP CONDITION, A SIGNAL IS INPUT TO **TERMINAL (A)4** OF THE ENGINE CONTROL MODULE (ENGINE AND ELECTRONICALLY CONTROLLED TRANSMISSION ECU). THE ENGINE CONTROL MODULE (ENGINE AND ELECTRONICALLY CONTROLLED TRANSMISSION ECU) OPERATES AND CUTS THE CURRENT TO THE SOLENOID TO RELEASE LOCK–UP.

4. OVERDRIVE CIRCUIT

***** O/D MAIN SW ON

WHEN THE O/D MAIN SW IS TURNED ON (SW POINT IS OPEN), A SIGNAL IS INPUT TO **TERMINAL (A)28** OF THE ENGINE CONTROL MODULE (ENGINE AND ELECTRONICALLY CONTROLLED TRANSMISSION ECU) AND THE ELECTRONICALLY CONTROLLED TRANSMISSION CAUSES SHIFT TO OVERDRIVE WHEN THE CONDITIONS FOR OVERDRIVE ARE MET.

***** O/D MAIN SW OFF

WHEN THE O/D MAIN SW IS TURNED OFF (SW POINT IS CLOSED), THE CURRENT FLOWING THROUGH THE O/D OFF INDICATOR LIGHT FLOWS TO **GROUND** BY WAY OF THE O/D MAIN SW AND CAUSES THE O/D OFF INDICATOR LIGHT TO LIGHT UP. AT THE SAME TIME, A SIGNAL IS INPUT TO **TERMINAL (A)28** OF THE ENGINE CONTROL MODULE (ENGINE AND ELECTRONICALLY CONTROLLED TRANSMISSION ECU) AND THE ELECTRONICALLY CONTROLLED TRANSMISSION PREVENTS SHIFT INTO OVERDRIVE.

5. ELECTRONICALLY CONTROLLED TRANSMISSION PATTERN SELECT SW CIRCUIT

WHEN THE ELECTRONICALLY CONTROLLED TRANSMISSION PATTERN SELECT SW IS SWICHED FROM NORMAL TO MANUAL, A SIGNAL IS INPUT TO **TERMINAL (A)18** OF THE ENGINE CONTROL MODULE (ENGINE AND ELECTRONICALLY CONTROLLED TRANSMISSION ECU). INPUT OF THIS SIGNAL CAUSES CURRENT TO FLOW FROM THE **GAUGE** FUSE TO **TERMINAL (A)1** OF COMBINATION METER → **TERMINAL (A)12** → **TERMINAL (A)25** OF ENGINE CONTROL MODULE (ENGINE AND ELECTRONICALLY CONTROLLED TRANSMISSION ECU) → **GROUND**, LIGHTING UP THE INDICATOR LIGHT. IF THE A/T SHIFT LEVER IS THEN SHIFTED TO **"2"** POSITION, THE ENGINE CONTROL MODULE (ENGINE AND ELECTRONICALLY CONTROLLED TRANSMISSION ECU) ENABLES THE VEHICLE TO START OFF WITH THE TRANSMISSION IN 2ND GEAR, THUS PERMITTING EASING STARTING OFF AND DRIVING ON SLIPPERY ROADS.

6. CRUISE CONTROL

WHEN CRUISE CONTROL OPERATION IS SELECTED A SIGNAL IS INPUT TO **TERMINAL (A)12** OF THE ENGINE CONTROL MODULE (ENGINE AND ELECTRONICALLY CONTROLLED TRANSMISSION ECU) FROM CRUISE CONTROL ECU. AS A RESULT, THE ENGINE CONTROL MODULE (ENGINE AND ELECTRONICALLY CONTROLLED TRANSMISSION ECU) OPERATES AND CONTROLS OVERDRIVE, LOCK–UP AND SO ON FOR SMOOTH DRIVING.

ELECTRONICALLY CONTROLLED TRANSMISSION AND A/T INDICATOR (FOR 2JZ–GE)

SERVICE HINTS

E 2 ELECTRONICALLY CONTROLLED TRANSMISSION SOLENOID
1, 2, 3– GROUND : EACH 11–15

E 3 ENGINE COOLANT TEMP. SENSOR (EFI WATER TEMP. SENSOR)
1– 2 : **10–20** K (**–20**˚C, **–4**˚F)
4– 7 K (**0**˚C, **32**˚F)
2– 3 K (**20**˚C, **68**˚F)
0.9–1.3 K (**40**˚C, **104**˚F)
0.4–0.7 K (**60**˚C, **140**˚F)
0.2–0.4 K (**80**˚C, **176**˚F)

E 9(B), E10(A) ENGINE CONTROL MODULE (ENGINE AND ELECTRONICALLY CONTROLLED TRANSMISSION ECU)
BATT–E1 : ALWAYS **9–14** VOLTS
IGSW–E1: **9–14** VOLTS WITH IGNITION SW ON
+B–E1 : **9–14** VOLTS WITH IGNITION SW ON
IDL1–E1: **0 –1.5** VOLTS WITH IGNITION SW ON AND THROTTLE VALVE FULLY CLOSED
9–14 VOLTS WITH IGNITION SW ON AND THROTTLE VALVE FULLY OPEN
VTA1–E1:**0.3– 0.8** VOLTS WITH IGNITION SW ON AND THROTTLE VALVE FULLY CLOSED
3.2–4.9 VOLTS WITH IGNITION SW ON AND THROTTLE VALVE FULLY OPEN
STA–E1: **6–14** VOLTS WITH ENGINE CRANKING
M–REL–E1 : **9–14** VOLTS WITH IGNITION SW ON
VCC–E1: 4.5–5.5 VOLTS WITH IGNITION SW ON
L–E1 : APPROX. **7.5– 14.0** VOLTS WITH SHIFT LEVER AT **“L”** POSITION
2–E1 : APPROX. **7.5– 14.0** VOLTS WITH SHIFT LEVER AT **“2”** POSITION

V11 VEHICLE SPEED SENSOR (SPEED SENSOR) NO. 2 (FOR ELECTRONICALLY CONTROLLED TRANSMISSION)
1–2 : APPROX. **620**

E 8 ELECTRONICALLY CONTROLLED TRANSMISSION PATTERN SELECT SW
4–3 : CLOSED WITH ELECTRONICALLY CONTROLLED TRANSMISSION PATTERN SELECT SW AT **MANUAL** POSITION

: PARTS LOCATION

CODE	SEE PAGE	CODE	SEE PAGE	CODE	SEE PAGE
A 5	26 (2JZ–GE)	**E 2**	26 (2JZ–GE)	**O 5**	29
C10 B	28	**E 3**	26 (2JZ–GE)	**P 2**	27 (2JZ–GE)
C11 A	28	**E 8**	29	**P 3**	27 (2JZ–GE)
C12 C	28	**E 9** B	29	**S11**	29
C16	28	**E10** A	29	**T 2**	27 (2JZ–GE)
D 1	26 (2JZ–GE)	**I19**	29	**T 6**	29
D 4	26	**J 1**	29	**V10**	27 (2JZ–GE)
D 5	28	**J 2**	29	**V11**	27 (2JZ–GE)
E 1	26 (2JZ–GE)	**K 4**	29	**V12**	27

: RELAY BLOCKS

CODE	SEE PAGE	RELAY BLOCKS (RELAY BLOCK LOCATION)
2	22	R/B NO. 2 (ENGINE COMPARTMENT LEFT)

: JUNCTION BLOCK AND WIRE HARNESS CONNECTOR

CODE	SEE PAGE	JUNCTION BLOCK AND WIRE HARNESS (CONNECTOR LOCATION)
1B	20	ENGINE ROOM MAIN WIRE AND J/B NO. 1 (LEFT KICK PANEL)
1E	20	INSTRUMENT PANEL WIRE AND J/B NO.1 (LEFT KICK PANEL)
1H	20	COWL WIRE AND J/B NO.1 (LEFT KICK PANEL)
1I		
1J		
1K		
2A	22	BATTERY AND J/B NO.2 (ENGINE COMPARTMENT LEFT)

: CONNECTOR JOINING WIRE HARNESS AND WIRE HARNESS

CODE	SEE PAGE	JOINING WIRE HARNESS AND WIRE HARNESS (CONNECTOR LOCATION)
EA1	34 (2JZ–GE)	ENGINE WIRE AND ENGINE ROOM MAIN WIRE (NEAR THE R/B NO. 2)
EA3	34	
IB1	36	ENGINE ROOM MAIN WIRE AND COWL WIRE (LEFT KICK PANEL)
IF3	36	INSTRUMENT PANEL WIRE AND COWL WIRE (RIGHT KICK PANEL)
II1	38	ENGINE WIRE AND INSTRUMENT PANEL WIRE (RIGHT KICK PANEL)
IJ1	38	ENGINE WIRE AND COWL WIRE (RIGHT KICK PANEL)
IJ2		

: GROUND POINTS

CODE	SEE PAGE	GROUND POINTS LOCATION
EB	34 (2JZ–GE)	FRONT SIDE OF LEFT FENDER
ED	34 (2JZ–GE)	REAR SIDE OF INTAKE MANIFOLD
IE	36	LEFT KICK PANEL
IF		
IH	36	RIGHT KICK PANEL

: SPLICE POINTS

CODE	SEE PAGE	WIRE HARNESS WITH SPLICE POINTS	CODE	SEE PAGE	WIRE HARNESS WITH SPLICE POINTS
E20	34	ENGINE WIRE	**I11**	38	COWL WIRE
E25			**I14**	38	INSTRUMENT PANEL WIRE
E27			**I17**	38	ENGINE WIRE
E28			**I21**	38	INSTRUMENT PANEL WIRE
I 8	38	INSTRUMENT PANEL WIRE			

A 5 GRAY

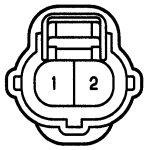

C10 (B) BLUE

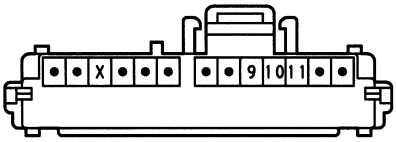

C11 (A) BROWN

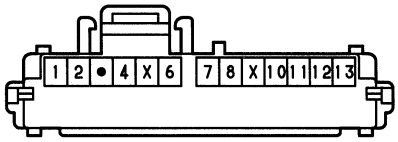

C12 (C)

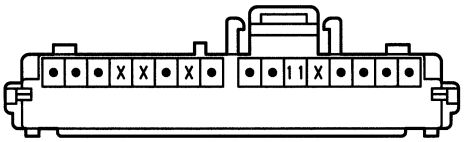

C16 GREEN

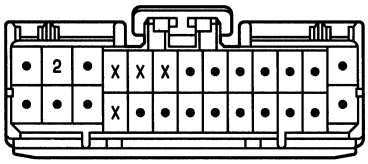

D 1 BLACK

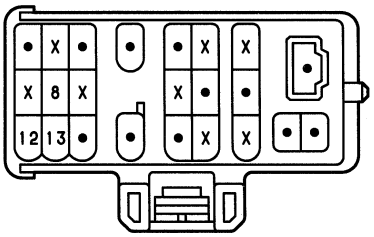

D 4 BLACK



D 5 DARK GRAY

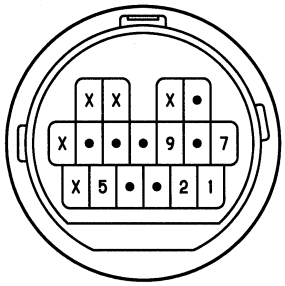

E 1 DARK GRAY



E 2 BLACK

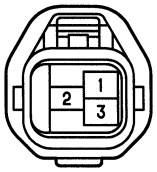

E 3 GREEN



E 8

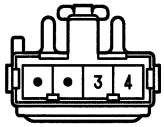

E 9 (B) DARK GRAY

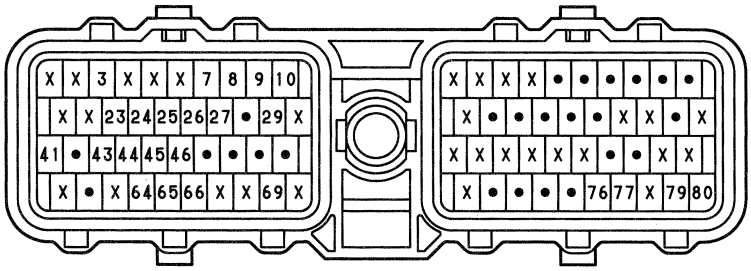

E10 (A) DARK GRAY

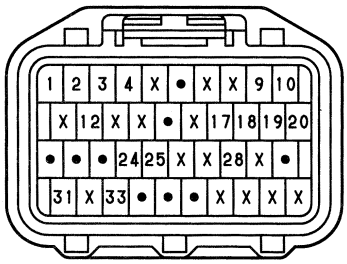

I19

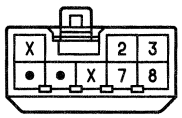

J 1

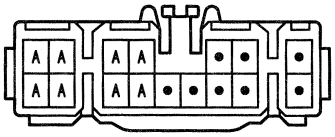

(HINT:SEE PAGE 7)

J 2

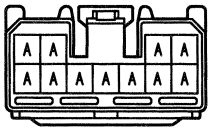

(HINT:SEE PAGE 7)

K 4 BLACK



O 5 BLUE

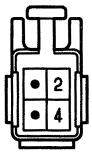

P 2 GRAY

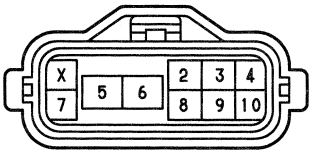

S11 BLUE

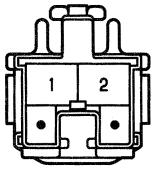

T 2 BLACK

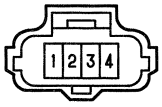

T 6

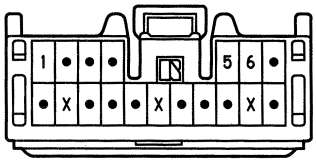

V10 BLACK



V11 BLACK



V12 BLACK



A 6 (A) BLACK



A 7 (B) GRAY



A 8 (A) GRAY

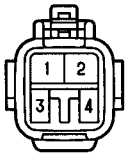

A 9 (B) GRAY

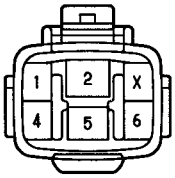

A10 GRAY



A11 GRAY



A18 (B)

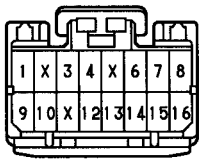

A19 (A)

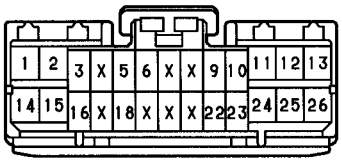

A23

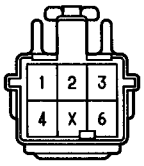

A31 GRAY



A32 GRAY

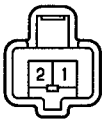

C10 (A) BLUE

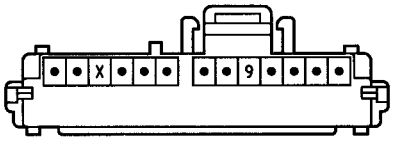

C12 (B)

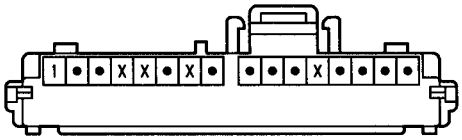

D 1 BLACK

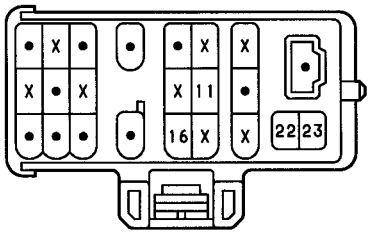

(A/T) D 5 DARK GRAY

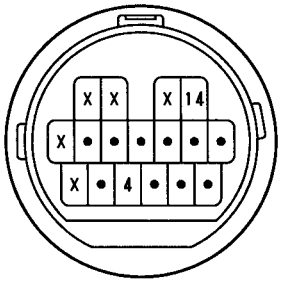

(M/T) D 5 DARK GRAY

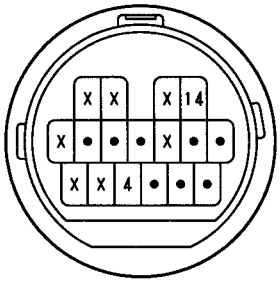

P 5



S11 BLUE

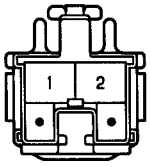

T 5

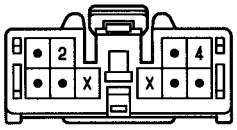

ABS (ANTI–LOCK BRAKE SYSTEM)

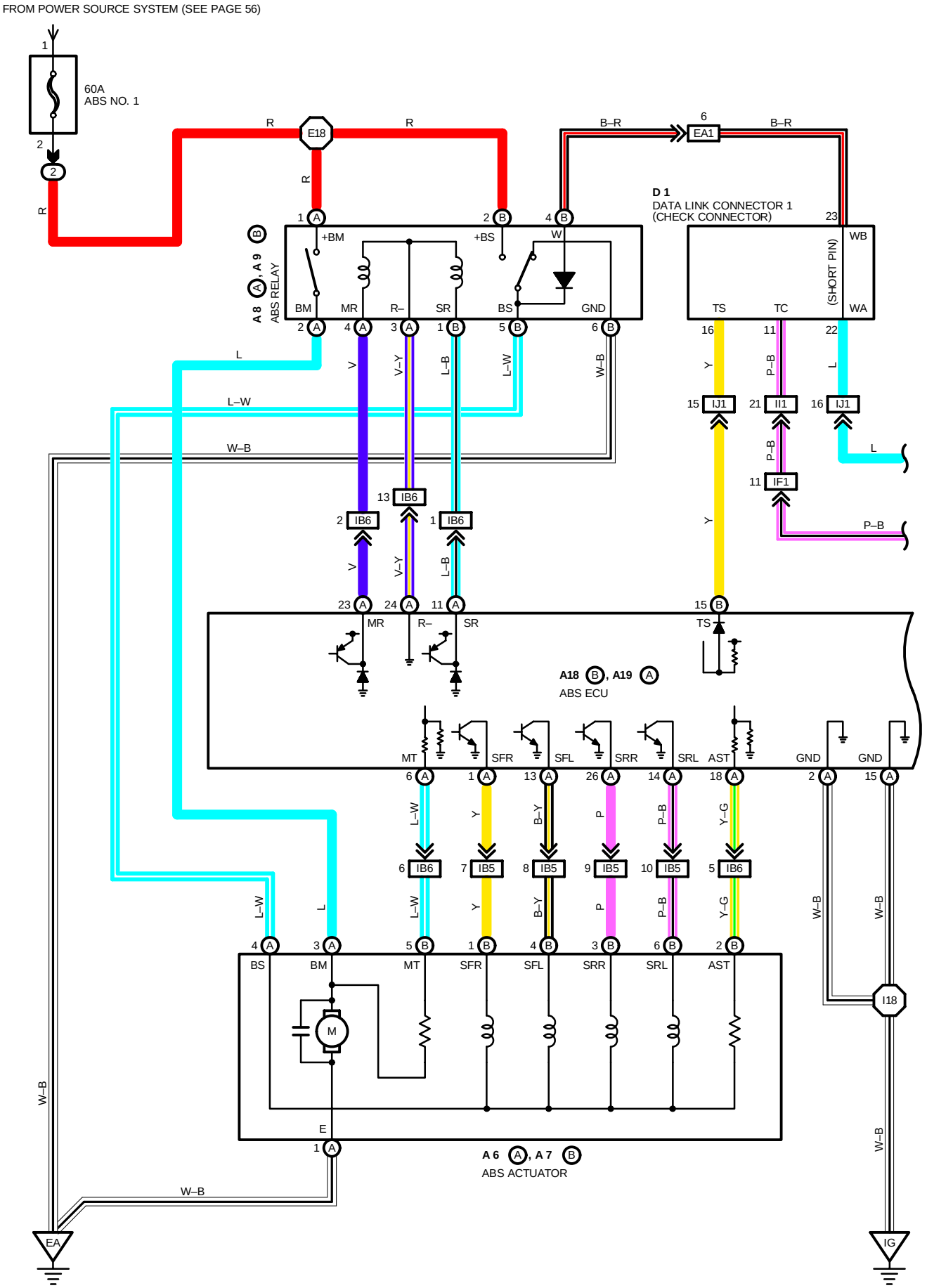

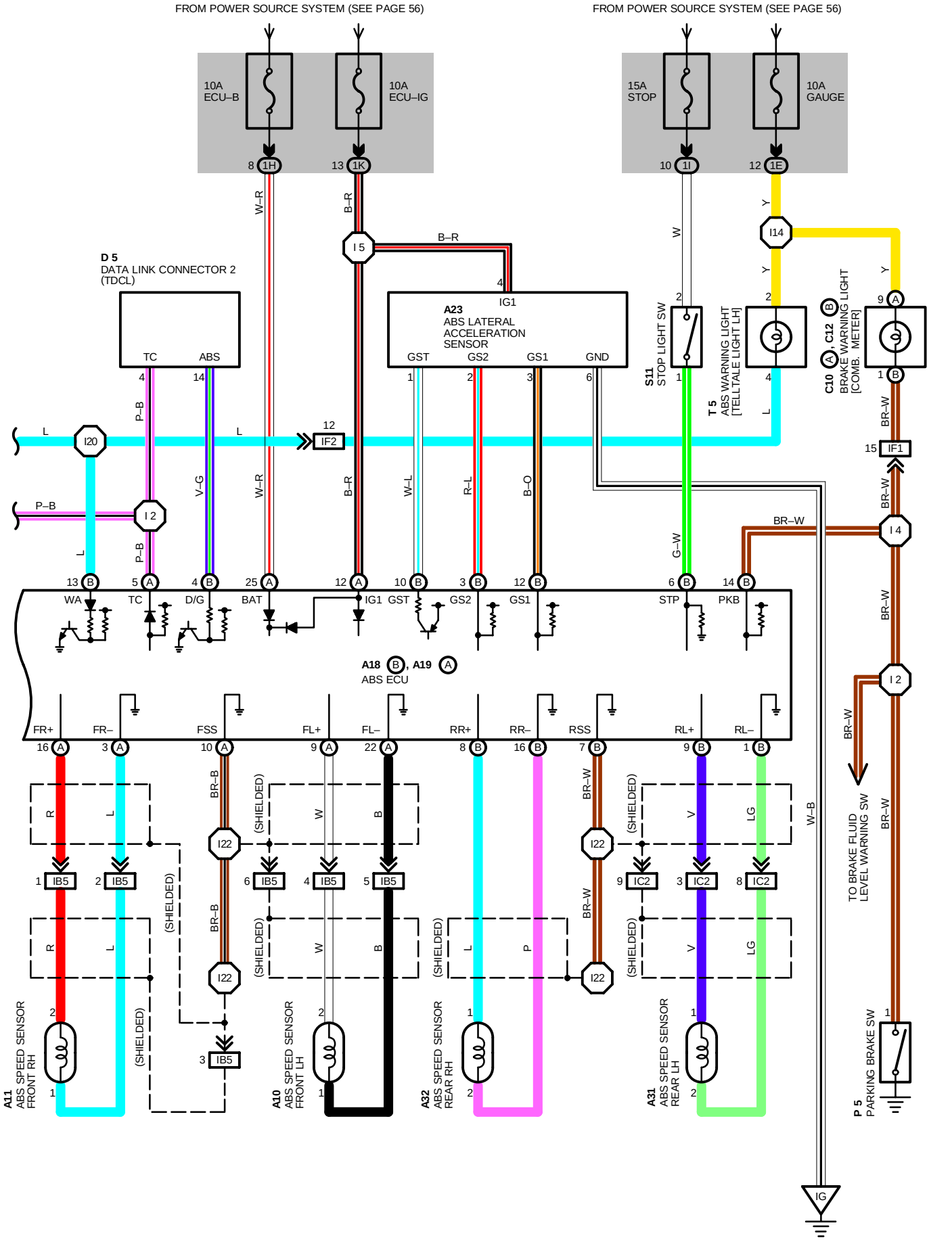
FROM POWER SOURCE SYSTEM (SEE PAGE 56)
FROM POWER SOURCE SYSTEM (SEE PAGE 56)
10A ECU–B
10A ECU–IG
15A STOP
10A GAUGE
8 1H
13 1K
10 1I
12 1E
W–R
B–R
B–R
W
Y
I 5
I14
D 5
DATA LINK CONNECTOR 2 (TDCL)
TC
ABS
A23
ABS LATERAL ACCELERATION SENSOR
IG1
GST
GS2
GS1
GND
S11
STOP LIGHT SW
T 5
ABS WARNING LIGHT [TELLTALE LIGHT LH]
C10 , C12
BRAKE WARNING LIGHT [COMB. METER]
P–B
V–G
W–R
B–R
W–L
R–L
B–O
G–W
BR–W
L
I20
I 2
IF2
IF1
I 4
WA
TC
D/G
BAT
IG1
GST
GS2
GS1
STP
PKB
A18 B , A19 A
ABS ECU
FR+
FR–
FSS
FL+
FL–
RR+
RR–
RSS
RL+
RL–
BR–B
(SHIELDED)
W
B
L
P
V
LG
R
IB5
I22
IC2
W–B
IG
TO BRAKE FLUID LEVEL WARNING SW
A11
ABS SPEED SENSOR FRONT RH
A10
ABS SPEED SENSOR FRONT LH
A32
ABS SPEED SENSOR REAR RH
A31
ABS SPEED SENSOR REAR LH
P 5
PARKING BRAKE SW

ABS (ANTI–LOCK BRAKE SYSTEM)

SYSTEM OUTLINE

THIS SYSTEM CONTROLS THE RESPECTIVE BRAKE FLUID PRESSURES ACTING ON THE DISC BRAKE CYLINDERS OF THE RIGHT FRONT WHEEL, LEFT FRONT WHEEL, RIGHT REAR WHEEL AND LEFT REAR WHEEL WHEN THE BRAKES ARE APPLIED IN A PANIC STOP SO THAT THE WHEELS DO NOT LOCK.

THIS RESULTS IN IMPROVED DIRECTIONAL STABILITY AND STEERABILITY DURING PANIC BRAKING.

1. INPUT SIGNALS

(1) SPEED SENSOR SIGNAL
THE SPEED OF THE WHEELS IS DETECTED AND INPUT TO **TERMINALS FL+, FR+, RL+** AND **RR+** OF THE ABS ECU.

(2) STOP LIGHT SW SIGNAL
A SIGNAL IS INPUT TO **TERMINAL STP** OF THE ABS ECU WHEN THE BRAKE PEDAL IS DEPRESSED.

(3) PARKING BRAKE SW SIGNAL
A SIGNAL IS INPUT TO **TERMINAL PKB** OF THE ABS ECU WHEN THE PARKING BRAKE LEVER IS PULLED UP.

(4) DECELERATION SENSOR SIGNAL
LATERAL ACCELERATION IS DETECTED AND INPUT TO THE ABS ECU.

2. SYSTEM OPERATION

DURING SUDDEN BRAKING, THE ABS ECU WHICH HAS SIGNALS INPUT FROM EACH SENSOR CONTROLS THE CURRENT FLOWING TO THE SOLENOID INSIDE THE ACTUATOR AND LETS THE HYDRAULIC PRESSURE ACTING ON EACH WHEEL CYLINDER ESCAPE TO THE RESERVOIR.

THE PUMP INSIDE THE ACTUATOR IS ALSO OPERATING AT THIS TIME AND IT RETURNS THE BRAKE FLUID FROM THE RESERVOIR TO THE MASTER CYLINDER, THUS PREVENTING LOCKING OF THE VEHICLE WHEELS.

IF THE ECU JUDGES THAT THE HYDRAULIC PRESSURE ACTING ON THE WHEEL CYLINDER IS INSUFFICIENT, THE CURRENT ACTING ON SOLENOID IS CONTROLLED AND THE HYDRAULIC PRESSURE IS INCREASED.

HOLDING OF THE HYDRAULIC PRESSURE IS ALSO CONTROLLED BY THE ECU, BY THE SAME METHOD AS ABOVE. BY REPEATED PRESSURE REDUCTION, HOLDING AND INCREASE ARE REPEATED TO MAINTAIN VEHICLE STABILITY AND TO IMPROVE STEERABILITY DURING SUDDEN BRAKING.

SERVICE HINTS

A 6(A), A 7(B) ABS ACTUATOR
(A) 1–GROUND : ALWAYS CONTINUOUS
(B) 1, **(B)** 3, **(B)** 4, **(B)** 6–GROUND : APPROX. **1.20** (IGNITION SW OFF)
(B) 2–**(A)** 4: **4–6** (IGNITION SW OFF)

A10, A11, A31, A32 ABS SPEED SENSOR FRONT LH, RH, REAR LH, RH
1–2: **0.8–1.3** K (**20**˚C, **68**˚F)

A18 (B), A19(A) ABS ECU
(A)12–GROUND : **10–14** VOLTS WITH IGNITION SW ON
(A) 2, **(A)15**–GROUND: ALWAYS CONTINUOUS
(A)25–GROUND : ALWAYS **10–14** VOLTS
(A)1, **(A)**13, **(A)**14,**(A)26**,–GROUND: **10–14** VOLTS WITH IGNITION SW ON
(B)14–GROUND : CONTINUITY WITH PARKING BRAKE LEVEL PULLED UP
(B) 6–GROUND :**10–14** VOLTS WITH STOP LIGHT SW ON (BRAKE PEDAL DEPRESSED)

P 5 PARKING BRAKE SW
1–GROUND: CLOSED WITH PARKING BRAKE LEVER PULLED UP

S11 STOP LIGHT SW
1–2: CLOSED WITH BRAKE PEDAL DEPRESSED

: PARTS LOCATION

CODE		SEE PAGE	CODE		SEE PAGE	CODE		SEE PAGE
A 6	A	26 (2JZ–GE)	**A18**	B	28	**C12**	B	28
A 7	B	26 (2JZ–GE)	**A19**	A	28	**D 1**		26 (2JZ–GE)
A 8	A	26	**A23**		28	**D 5**		28
A 9	B	26	**A31**		30	**P 5**		29
A10		26 (2JZ–GE)	**A32**		30	**S11**		29
A11		26 (2JZ–GE)	**C10**	A	28	**T 5**		29

: RELAY BLOCKS

CODE	SEE PAGE	RELAY BLOCKS (RELAY BLOCK LOCATION)
2	22	R/B NO. 2 (ENGINE COMPARTMENT LEFT)

: JUNCTION BLOCK AND WIRE HARNESS CONNECTOR

CODE	SEE PAGE	JUNCTION BLOCK AND WIRE HARNESS (CONNECTOR LOCATION)
1E	20	INSTRUMENT PANEL WIRE AND J/B NO.1 (LEFT KICK PANEL)
1H	20	COWL WIRE AND J/B NO.1 (LEFT KICK PANEL)
1I		
1K		

: CONNECTOR JOINING WIRE HARNESS AND WIRE HARNESS

CODE	SEE PAGE	JOINING WIRE HARNESS AND WIRE HARNESS (CONNECTOR LOCATION)
EA1	34 (2JZ–GE)	ENGINE WIRE AND ENGINE ROOM MAIN WIRE (NEAR THE R/B NO. 2)
IB5	36	ENGINE ROOM MAIN WIRE AND COWL WIRE (RIGHT KICK PANEL)
IB6		
IC2	36	FLOOR NO. 2 WIRE AND COWL WIRE (LEFT KICK PANEL)
IF1	36	INSTRUMENT PANEL WIRE AND COWL WIRE (INSTRUMENT PANEL REINFORCEMENT LH)
IF2		
II1	38	ENGINE WIRE AND INSTRUMENT PANEL WIRE (RIGHT KICK PANEL)
IJ1	38	ENGINE WIRE AND COWL WIRE (RIGHT KICK PANEL)

: GROUND POINTS

CODE	SEE PAGE	GROUND POINTS LOCATION
EA	34 (2JZ–GE)	FRONT SIDE OF RIGHT FENDER
IG	36	RIGHT KICK PANEL

: SPLICE POINTS

CODE	SEE PAGE	WIRE HARNESS WITH SPLICE POINTS	CODE	SEE PAGE	WIRE HARNESS WITH SPLICE POINTS
E18	34	ENGINE ROOM MAIN WIRE	**I14**	38	INSTRUMENT PANEL WIRE
I 2	38	COWL WIRE	**I18**	38	COWL WIRE
I 4			**I20**		
I 5	38	INSTRUMENT PANEL WIRE	**I22**		

ABS AND TRACTION CONTROL

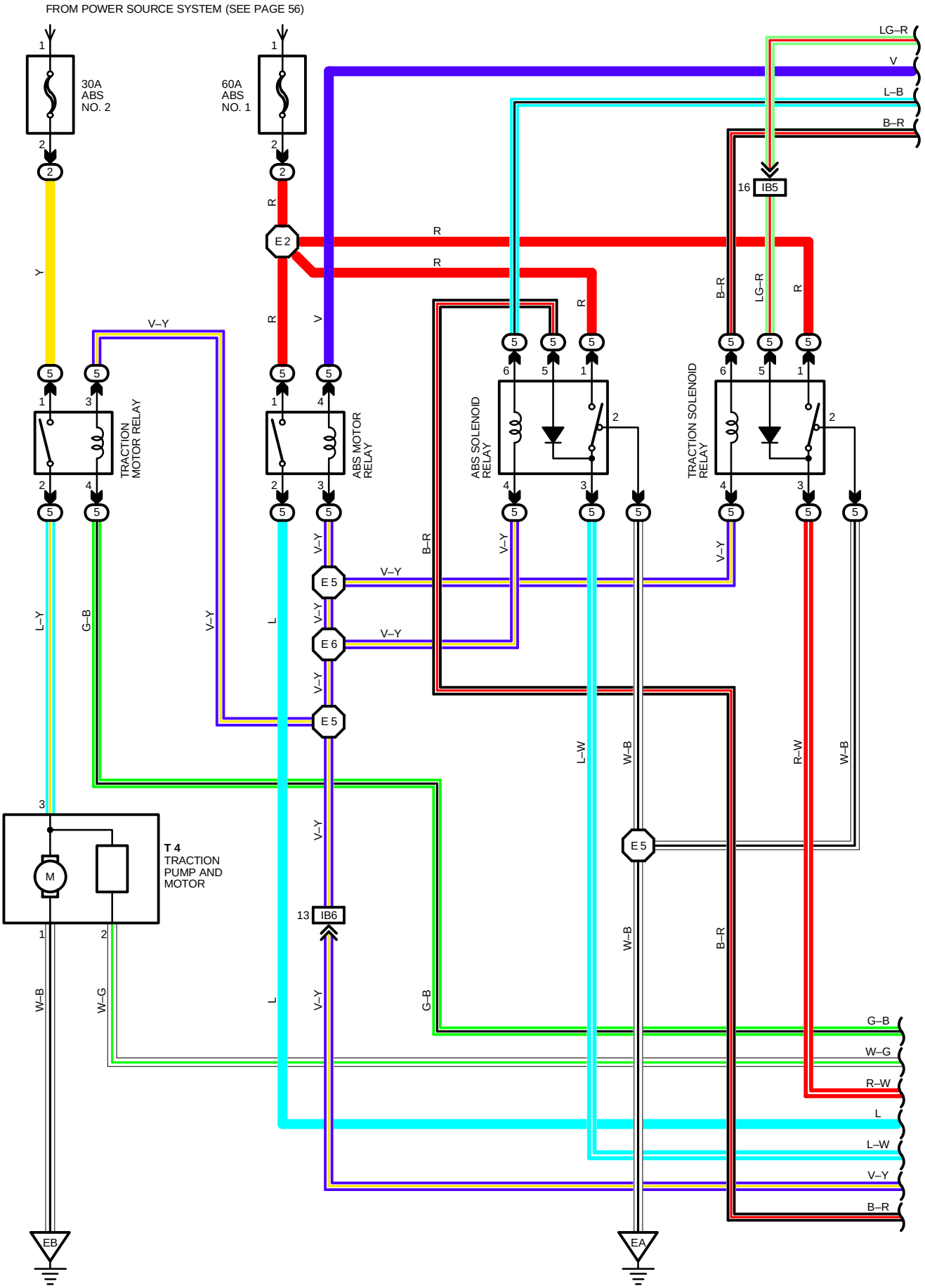

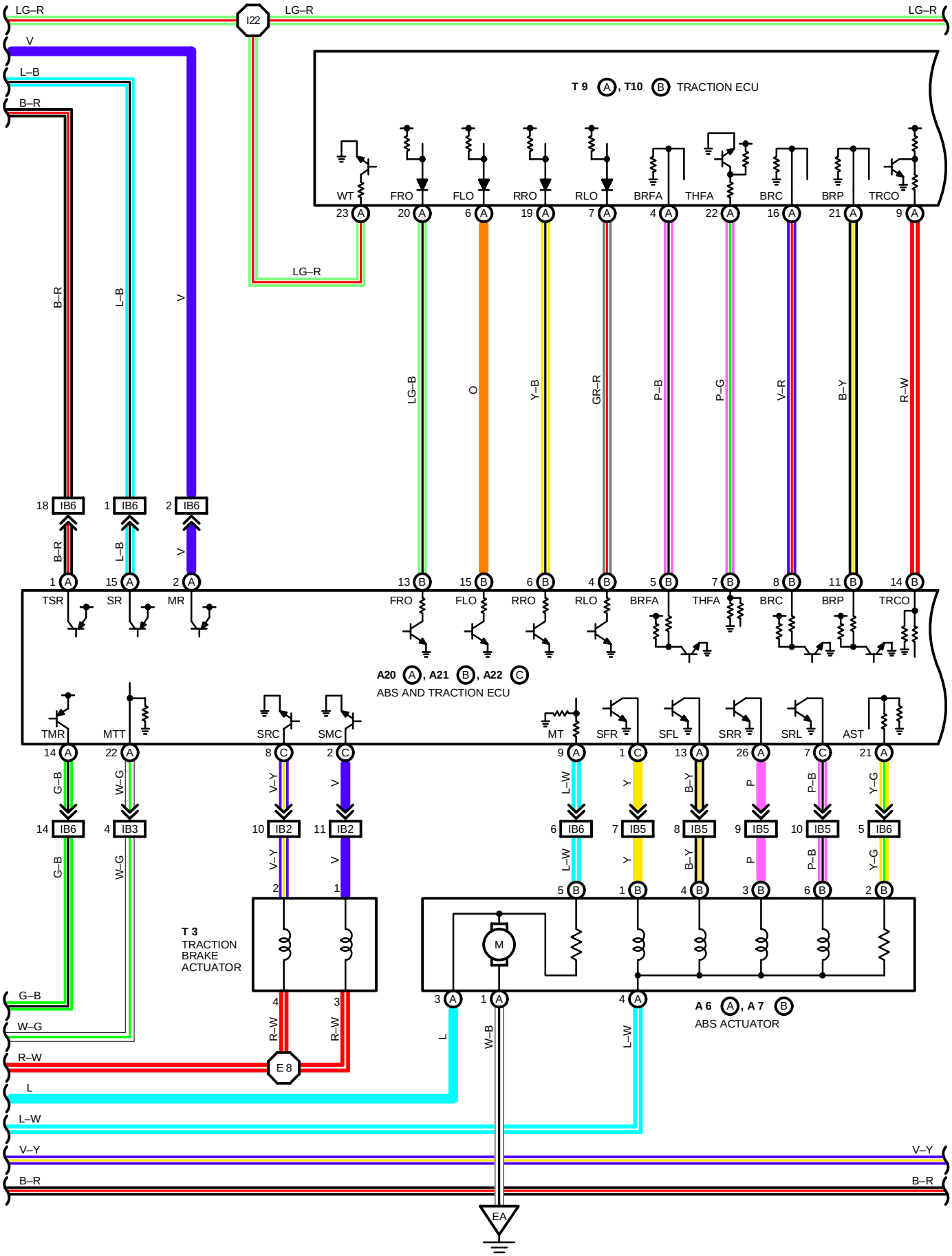
LG–R
I22
LG–R
LG–R
V
L–B
B–R
T 9 A, T10 B TRACTION ECU
WT
FRO
FLO
RRO
RLO
BRFA
THFA
BRC
BRP
TRCO
23 A
20 A
6 A
19 A
7 A
4 A
22 A
16 A
21 A
9 A
LG–R
B–R
L–B
V
LG–B
O
Y–B
GR–R
P–B
P–G
V–R
B–Y
R–W
18 IB6
1 IB6
2 IB6
1 A
15 A
2 A
13 B
15 B
6 B
4 B
5 B
7 B
8 B
11 B
14 B
TSR
SR
MR
FRO
FLO
RRO
RLO
BRFA
THFA
BRC
BRP
TRCO
A20 A, A21 B, A22 C
ABS AND TRACTION ECU
TMR
MTT
SRC
SMC
MT
SFR
SFL
SRR
SRL
AST
14 A
22 A
8 C
2 C
9 A
1 C
13 A
26 A
7 C
21 A
G–B
W–G
V–Y
V
L–W
Y
B–Y
P
P–B
Y–G
14 IB6
4 IB3
10 IB2
11 IB2
6 IB6
7 IB5
8 IB5
9 IB5
10 IB5
5 IB6
T 3
TRACTION
BRAKE
ACTUATOR
2
1
5 B
1 B
4 B
3 B
6 B
2 B
M
4
3
3 A
1 A
4 A
A 6 A, A 7 B
ABS ACTUATOR
G–B
W–G
R–W
L
L–W
V–Y
B–R
E 8
L
W–B
L–W
V–Y
B–R
EA

ABS AND TRACTION CONTROL

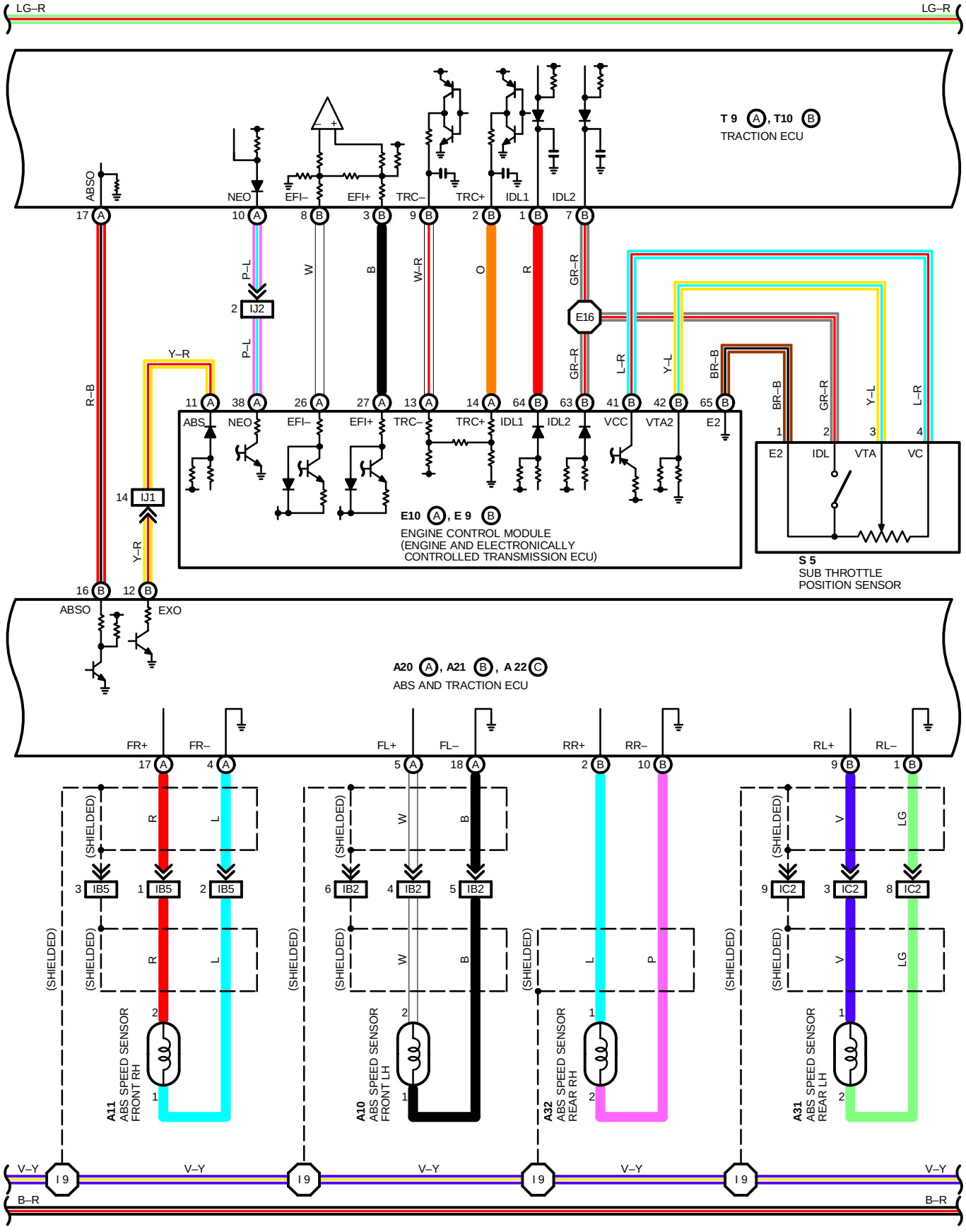

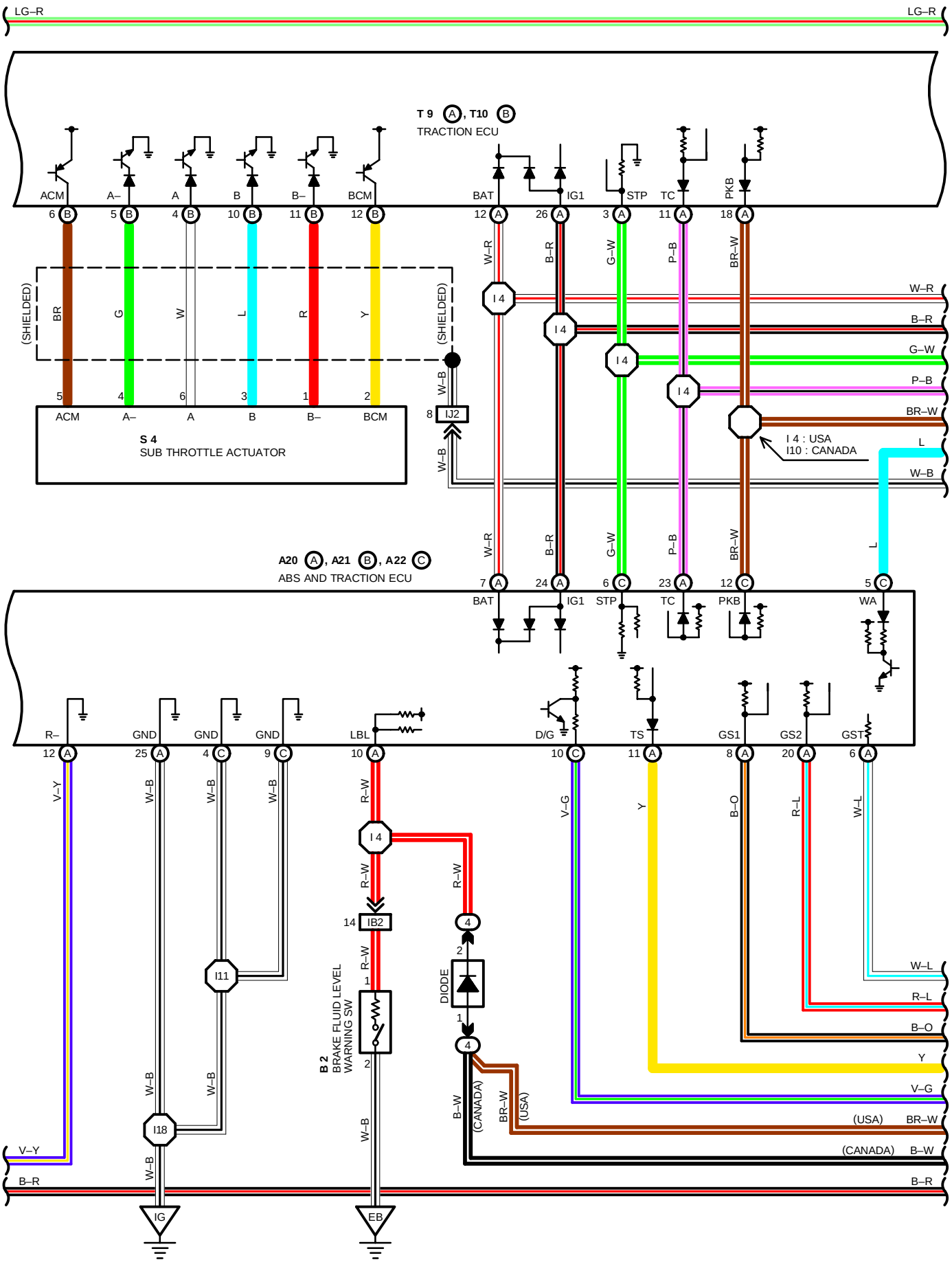
LG–R
LG–R
T 9 A, T10 B
TRACTION ECU
ACM
A–
A
B
B–
BCM
BAT
IG1
STP
TC
PKB
6 B
5 B
4 B
10 B
11 B
12 B
12 A
26 A
3 A
11 A
18 A
W–R
B–R
G–W
P–B
BR–W
L
W–B
(SHIELDED)
BR
G
W
L
R
Y
5
4
6
3
1
2
ACM
A–
A
B
B–
BCM
S 4
SUB THROTTLE ACTUATOR
8 IJ2
I 4
I 4 : USA
I10 : CANADA
A20 A, A21 B, A22 C
ABS AND TRACTION ECU
7 A
24 A
6 C
23 A
12 C
5 C
BAT
IG1
STP
TC
PKB
WA
R–
GND
GND
GND
LBL
D/G
TS
GS1
GS2
GST
12 A
25 A
4 C
9 C
10 A
10 C
11 A
8 A
20 A
6 A
V–Y
W–B
R–W
V–G
Y
B–O
R–L
W–L
I11
I18
14 IB2
B 2
BRAKE FLUID LEVEL
WARNING SW
DIODE
4
2
1
B–W
(CANADA)
BR–W
(USA)
IG
EB
B–R

ABS AND TRACTION CONTROL

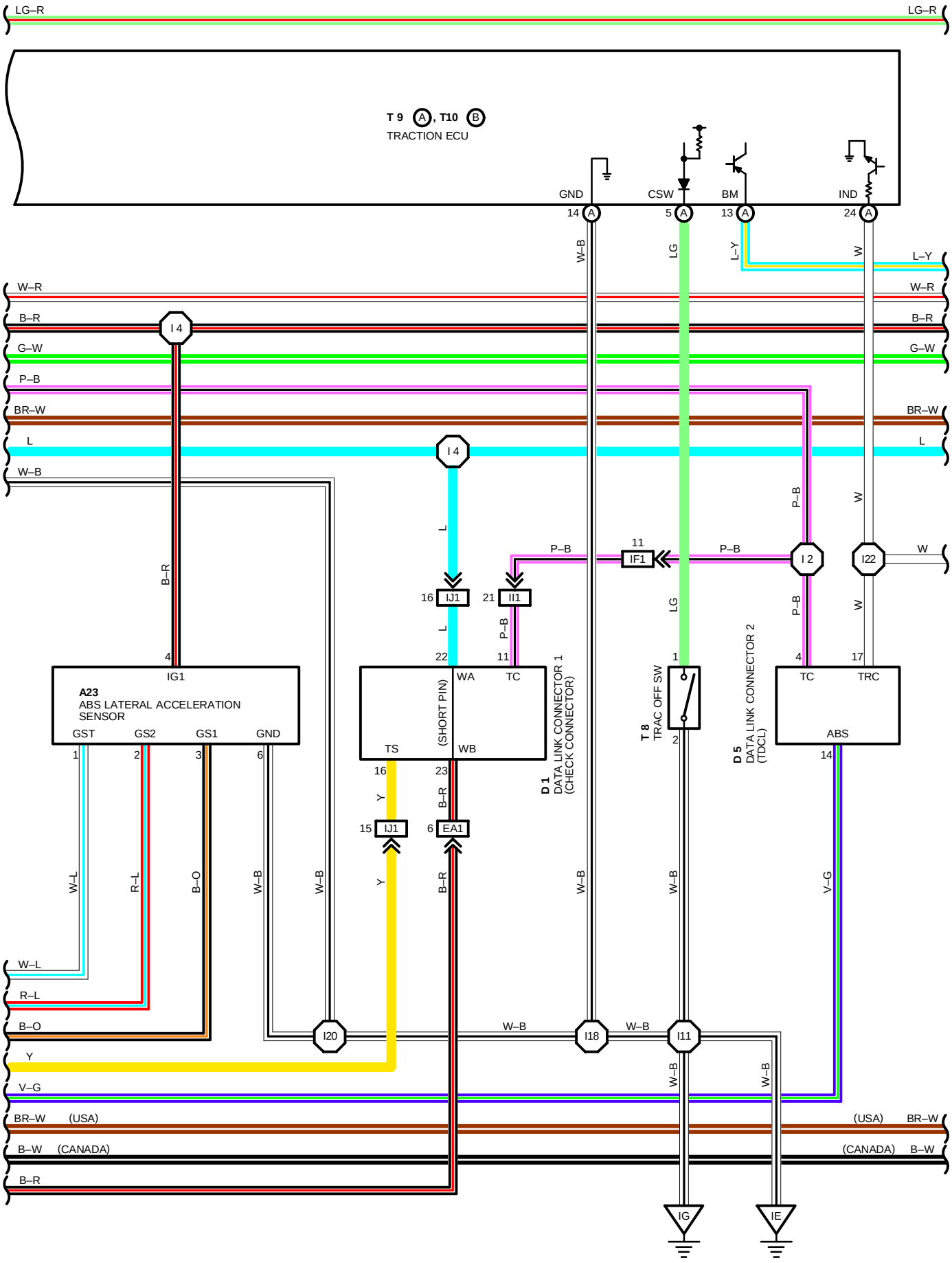

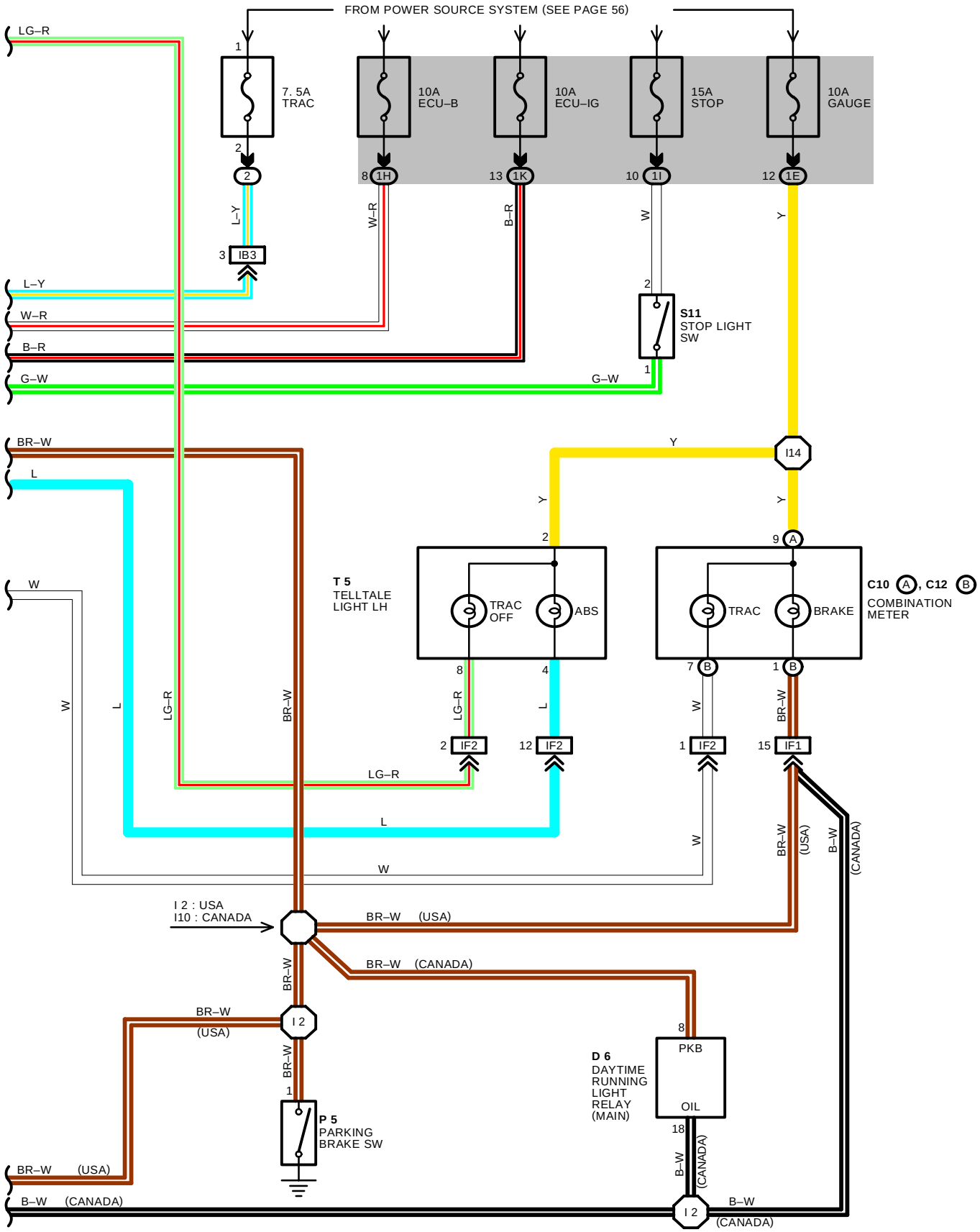
FROM POWER SOURCE SYSTEM (SEE PAGE 56)
7. 5A TRAC
10A ECU–B
10A ECU–IG
15A STOP
10A GAUGE
1H
1K
1I
1E
IB3
S11 STOP LIGHT SW
T 5 TELLTALE LIGHT LH
TRAC OFF
ABS
TRAC
BRAKE
C10 A, C12 B COMBINATION METER
I14
IF2
IF1
I 2 : USA
I10 : CANADA
I 2
P 5 PARKING BRAKE SW
D 6 DAYTIME RUNNING LIGHT RELAY (MAIN)
PKB
OIL
LG–R
L–Y
W–R
B–R
G–W
BR–W
L
W
Y
B–W
(USA)
(CANADA)

SYSTEM OUTLINE

(FOR ABS)

THIS SYSTEM CONTROLS THE RESPECTIVE BRAKE FLUID PRESSURES ACTING ON THE DISC BRAKE CYLINDERS OF THE RIGHT FRONT WHEEL, LEFT FRONT WHEEL, RIGHT REAR WHEEL AND LEFT REAR WHEEL WHEN THE BRAKES ARE APPLIED IN A PANIC STOP SO THAT THE WHEELS DO NOT LOCK.

THIS RESULTS IN IMPROVED DIRECTIONALLY STABILITY AND STEERABILITY DURING PANIC BRAKING.

1. INPUT SIGNALS

(1) SPEED SENSOR SIGNAL
THE SPEED OF THE WHEELS IS DETECTED AND INPUT TO **TERMINALS FL+, FR+, RL+** AND **RR+** OF THE ABS AND TRACTION ECU.

(2) STOP LIGHT SW SIGNAL
A SIGNAL IS INPUT TO **TERMINAL STP** OF THE ABS AND TRACTION ECU WHEN THE BRAKE PEDAL IS DEPRESSED.

(3) PARKING BRAKE SW SIGNAL
A SIGNAL IS INPUT TO **TERMINAL PKB** OF THE ABS AND TRACTION ECU WHEN THE PARKING BRAKE LEVER IS PULLED UP.

(4) DECELERATION SENSOR SIGNAL
LATERAL ACCELERATION IS DETECTED AND INPUT TO THE ABS AND TRACTION ECU.

2. SYSTEM OPERATION

DURING SUDDEN BRAKING, THE ABS AND TRACTION ECU WHICH HAS SIGNALS INPUT FROM EACH SENSOR CONTROLS THE CURRENT FLOWING TO THE SOLENOID INSIDE THE ACTUATOR AND LETS THE HYDRAULIC PRESSURE ACTING ON EACH WHEEL CYLINDER ESCAPE TO THE RESERVOIR. THE PUMP INSIDE THE ACTUATOR IS ALSO OPERATING AT THIS TIME AND IT RETURNS THE BRAKE FLUID FROM THE RESERVOIR TO THE MASTER CYLINDER, THUS PREVENTING LOCKING OF THE VEHICLE WHEELS.

IF THE ECU JUDGES THAT THE HYDRAULIC PRESSURE ACTING ON THE WHEEL CYLINDER IS INSUFFICIENT, THE CURRENT ACTING ON SOLENOID IS CONTROLLED AND THE HYDRAULIC PRESSURE IS INCREASED, HOLDING OF THE HYDRAULIC PRESSURE IS ALSO CONTROLLED BY THE ECU, BY THE SAME METHOD AS ABOVE. BY REPEATED PRESSURE REDUCTION, HOLDING AND INCREASE ARE REPEATED TO MAINTAIN VEHICLE STABILITY AND TO IMPROVE STEERABILITY DURING SUDDEN BRAKING.

(FOR TRACTION CONTROL)

THE TRACTION CONTROL SYSTEM IS A SYSTEM WHEREBY THE “ABS AND TRACTION ECU” AND “TRACTION ECU” CONTROLS THE ENGINE TORQUE AND THE HYDRAULIC PRESSURE OF THE WHEEL CYLINDER OF THE DRIVING WHEELS IN ORDER TO CONTROL SPINNING OF THE DRIVING WHEELS WHEN STARTING OFF AND ACCELERATING, AND PROVIDE THE MOST APPROPRIATE DRIVING FORCE IN RESPONSE TO THE ROAD CONDITIONS FOR VEHICLE STABILITY.

TRACTION CONTROL OPERATION

VEHICLE SPEED SIGNALS FROM THE SPEED SENSOR INSTALLED ON EACH WHEEL ARE INPUT TO THE ABS AND TRACTION ECU.

WHEN THE ACCELERATOR PEDAL IS DEPRESSED WHILE DRIVING ON A SLIPPERY ROAD AND THE DRIVING WHEEL (REAR WHEEL) SLIPS, IF THE ROTATION OF THE REAR WHEEL EXCEEDS THE ROTATION OF THE FRONT WHEELS FOR A SPECIFIED PERIOD, THE ECU JUDGES THAT THE REAR WHEEL IS SLIPPING.

WHEN THIS OCCURS, CURRENT FLOWS FROM TRACTION ECU TO SUB THROTTLE ACTUATOR TO CLOSE THE SUB THROTTLE VALVE. AT THE SAME TIME, OPERATION OF THE ABS AND TRACTION ECU CAUSE THE TRACTION BRAKE ACTUATORS (MASTER CYLINDER CUT, RESERVOIR CUT SOLENOID) TO TURN ON TO SWITCH THE HYDRAULIC CIRCUIT TO “TRACTION” MODE.

IN THIS CASE, SIGNALS ARE INPUT FROM **TERMINAL SRR** OF ABS AND TRACTION ECU TO **TERMINAL (B)3** OF ABS ACTUATOR, AND FROM **TERMINAL SRL** OF ABS AND TRACTION ECU TO **TERMINAL (B)6** OF ABS ACTUATOR, CONTROLLING THE REAR WHEEL SOLENOID IN THE ABS ACTUATOR AND INCREASING THE HYDRAULIC PRESSURE OF THE WHEEL CYLINDER IN ORDER TO PREVENT SLIP.

TO MAINTAIN THE HYDRAULIC PRESSURE OF THE REAR WHEELS, THE REAR WHEEL SOLENOID INSIDE THE ABS ACTUATOR IS PUT IN “HOLD” MODE AND KEEPS THE HYDRAULIC PRESSURE TO THE WHEEL CYLINDER CONSTANT.

WHEN THE AMOUNT OF SLIP HAS DECREASED, THE HYDRAULIC PRESSURE IN THE WHEEL CYLINDER DECREASES.

SERVICE HINTS

A20 (A), A21 (B), A22 (C) ABS AND TRACTION ECU
(A) 7–GROUND : ALWAYS **10–14** VOLTS
(A) 24–GROUND : **10–14** VOLTS WITH IGNITION SW AT **ON** POSITION
(C) 6–GROUND : **10–14** VOLTS WITH STOP LIGHT SW ON
(A) 25, **(C)** 4, **(C)** 9–GROUND : ALWAYS CONTINUOUS
(C) 12–GROUND : **10–14** VOLTS WITH PARKING BRAKE LEVER PULLED UP (PARKING BRAKE SW ON)

A 6 (A), A 7 (B) ABS ACTUATOR
(A) 1–GROUND : ALWAYS CONTINUOUS
(B) 1, **(B)** 3, **(B)** 4, **(B)** 6–GROUND : APPROX. **1.2** (IGNITION SW OFF)
(B) 2–GROUND : **4–6** (IGNITION SW OFF)

T 3 TRACTION BRAKE ACTUATOR
1–3 : APPROX. **2.1**
2–4 : APPROX. **2.1**

S11 STOP LIGHT SW
2–1: CLOSED WITH BRAKE PEDAL DEPRESSED

A10, A11, A31, A32 ABS SPEED SENSOR FRONT LH, RH, REAR LH, RH
1–2: **0.8– 1.3** K (**20**˚C, **68**˚F)

T 9(A), T10(B) TRACTION ECU
(A)26–GROUND: **10–14** VOLTS WITH IGNITION SW AT **ON** POSTION
(A)13–GROUND: ALWAYS **10–14** VOLTS
(A)14–GROUND: ALWAYS BELOW **1** VOLTS
(A)18–GROUND:**10–14** VOLTS WITH IGNITION SW ON PARKING BRAKE LEVER RELEASED (PARKING BRAKE SW OFF)
(A) 3–GROUND: **10–14** VOLTS WITH STOP LIGHT SW ON
(A) 5–GROUND: **10–14** VOLTS WITH TRAC OFF SW RELEASED
(A)12–GROUND: ALWAYS **10–14** VOLTS

P 5 PARKING BRAKE SW
1–GROUND : CLOSED WITH PARKING BRAKE LEVER DEPRESSED

S 4 SUB THROTTLE ACTUATOR
2–1, 2–3 : APPROX. **1.1**
5–4, 5–6 : APPROX. **1.1**

○ : PARTS LOCATION

CODE		SEE PAGE	CODE		SEE PAGE	CODE		SEE PAGE
A 6	A	24 (2JZ–GTE)	**B 2**		24 (2JZ–GTE)	**S 5**		25
A 7	B	24 (2JZ–GTE)	**C10**	A	28	**S11**		29
A10		24 (2JZ–GTE)	**C12**	B	28	**T 3**		25
A11		24 (2JZ–GTE)	**D 1**		24 (2JZ–GTE)	**T 4**		25
A20	A	28	**D 5**		28	**T 5**		29
A21	B	28	**D 6**		28	**T 8**		29
A22	C	28	**E 9**	B	29	**T 9**	A	29
A23		28	**E10**	A	29	**T10**	B	29
A31		30	**P 5**		29			
A32		30	**S 4**		25			

: RELAY BLOCKS

CODE	SEE PAGE	RELAY BLOCKS (RELAY BLOCK LOCATION)
2	22	R/B NO. 2 (ENGINE COMPARTMENT LEFT)
4	23	R/B NO. 4 (LEFT KICK PANEL)
5	23	R/B NO. 5 (ENGINE COMPARTMENT RIGHT)

: JUNCTION BLOCK AND WIRE HARNESS CONNECTOR

CODE	SEE PAGE	JUNCTION BLOCK AND WIRE HARNESS (CONNECTOR LOCATION)
1E	20	INSTRUMENT PANEL WIRE AND J/B NO.1 (LEFT KICK PANEL)
1H	20	COWL WIRE AND J/B NO.1 (LEFT KICK PANEL)
1I		
1K		

: CONNECTOR JOINING WIRE HARNESS AND WIRE HARNESS

CODE	SEE PAGE	JOINING WIRE HARNESS AND WIRE HARNESS (CONNECTOR LOCATION)
EA1	32 (2JZ–GTE)	ENGINE WIRE AND ENGINE ROOM MAIN WIRE (NEAR THE R/B NO. 2)
IB2	36	ENGINE ROOM MAIN WIRE AND COWL WIRE (LEFT KICK PANEL)
IB3		
IB5	36	ENGINE ROOM MAIN WIRE AND COWL WIRE (RIGHT KICK PANEL)
IB6		
IC2	36	FLOOR NO. 2 WIRE AND COWL WIRE (LEFT KICK PANEL)
IF1	36	INSTRUMENT PANEL WIRE AND COWL WIRE (INSTRUMENT PANEL REINFORCEMENT LH)
IF2		
II1	38	ENGINE WIRE AND INSTRUMENT PANEL WIRE (RIGHT KICK PANEL)
IJ1	38	ENGINE WIRE AND COWL WIRE (RIGHT KICK PANEL)
IJ2		

: GROUND POINTS

CODE	SEE PAGE	GROUND POINTS LOCATION
EA	32 (2JZ–GTE)	FRONT SIDE OF RIGHT FENDER
EB	32 (2JZ–GTE)	FRONT SIDE OF LEFT FENDER
IE	36	LEFT KICK PANEL
IG	36	RIGHT KICK PANEL

: SPLICE POINTS

CODE	SEE PAGE	WIRE HARNESS WITH SPLICE POINTS	CODE	SEE PAGE	WIRE HARNESS WITH SPLICE POINTS
E 2	32	ENGINE ROOM MAIN WIRE	**I 9**	38	COWL WIRE
E 5			**I10**		
E 6			**I11**		
E 8			**I14**	38	INSTRUMENT PANEL WIRE
E16	32	ENGINE WIRE	**I18**	38	COWL WIRE
1 2	38	COWL WIRE	**I20**		
1 4			**I22**		

A 6 (A) BLACK



A 7 (B) GRAY



A10 GRAY



A11 GRAY



A20 (A)

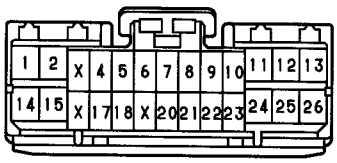

A21 (B)

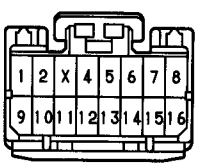

A22 (C)

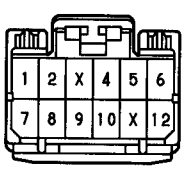

A23

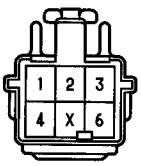

A31 GRAY



A32 GRAY



B 2 GRAY



C10 (A) BLUE

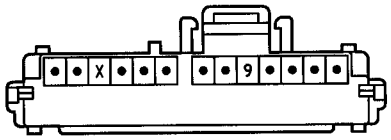

C12 (B)

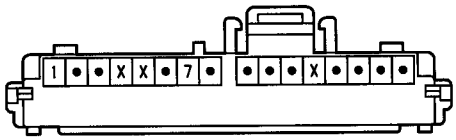

D 1 BLACK

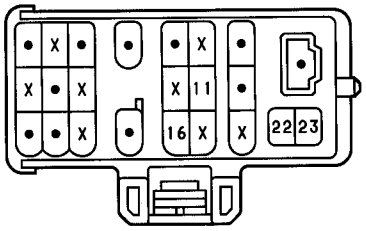

D 5 DARK GRAY

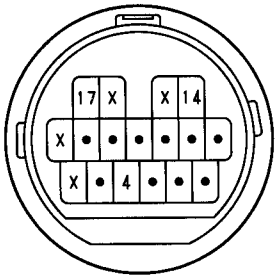

D 6 GRAY

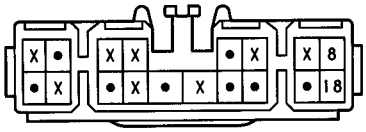

E 9 (B) DARK GRAY

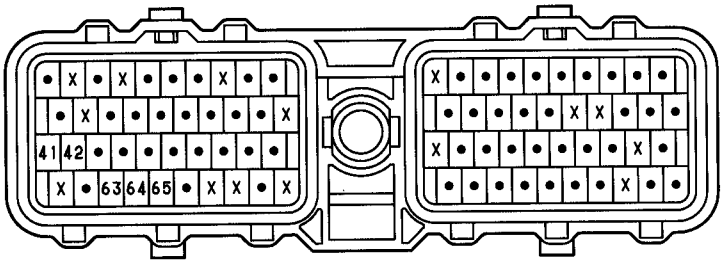

E10 (A) DARK GRAY

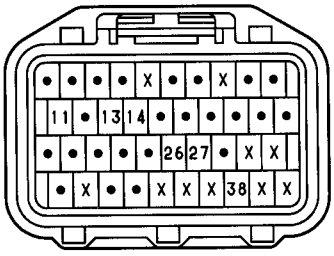

P 5



S 4 BLACK



S 5 BLACK



S11 BLUE

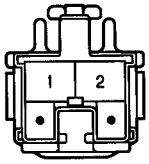

T 3 GRAY



T 4 GRAY

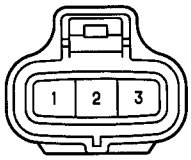

T 5

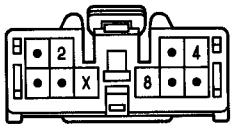

T 8 BLACK

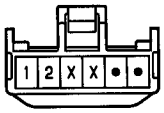

T 9 (A)

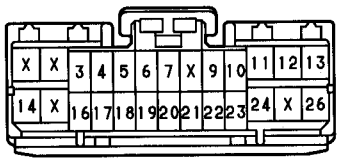

T10 (B)

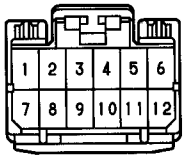

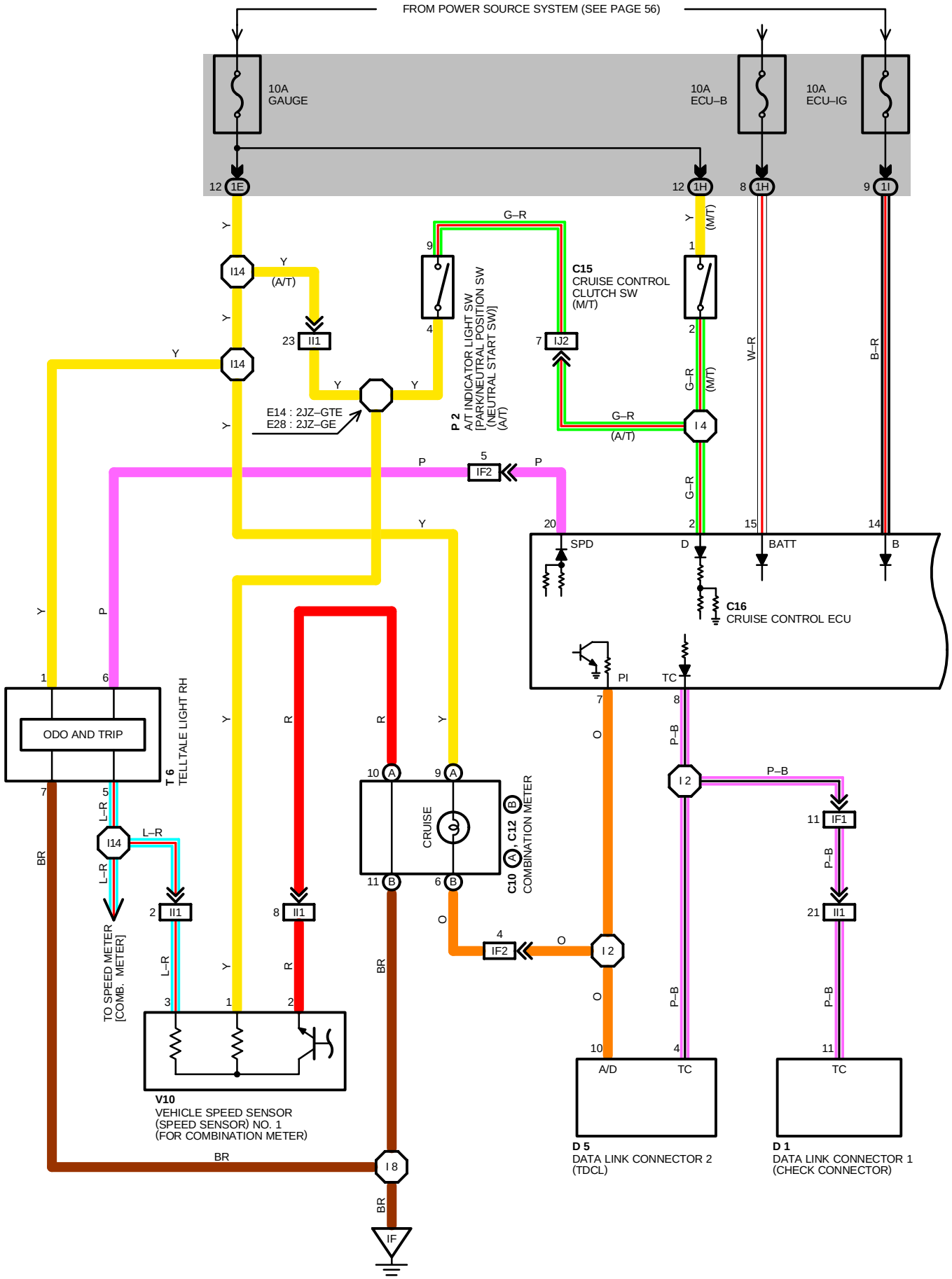
FROM POWER SOURCE SYSTEM (SEE PAGE 56)
10A GAUGE
10A ECU–B
10A ECU–IG
12 1E
12 1H
8 1H
9 1I
I14
(A/T)
23 II1
E14 : 2JZ–GTE
E28 : 2JZ–GE
P 2
A/T INDICATOR LIGHT SW [PARK/NEUTRAL POSITION SW (NEUTRAL START SW)] (A/T)
G–R
C15
CRUISE CONTROL CLUTCH SW (M/T)
7 IJ2
1 (M/T)
2
I 4
G–R (A/T)
G–R (M/T)
W–R
B–R
5 IF2
20
SPD
D
15
BATT
14
B
C16
CRUISE CONTROL ECU
PI
TC
7
8
O
P–B
I 2
P–B
11 IF1
21 II1
A/D
TC
D 5
DATA LINK CONNECTOR 2 (TDCL)
D 1
DATA LINK CONNECTOR 1 (CHECK CONNECTOR)
ODO AND TRIP
T 6
TELLTALE LIGHT RH
L–R
BR
TO SPEED METER [COMB. METER]
CRUISE
C10 (A), C12 (B)
COMBINATION METER
10 A
9 A
11 B
6 B
4 IF2
V10
VEHICLE SPEED SENSOR (SPEED SENSOR) NO. 1 (FOR COMBINATION METER)
I 8
IF
Y
P
R

FROM POWER SOURCE SYSTEM (SEE PAGE 56)

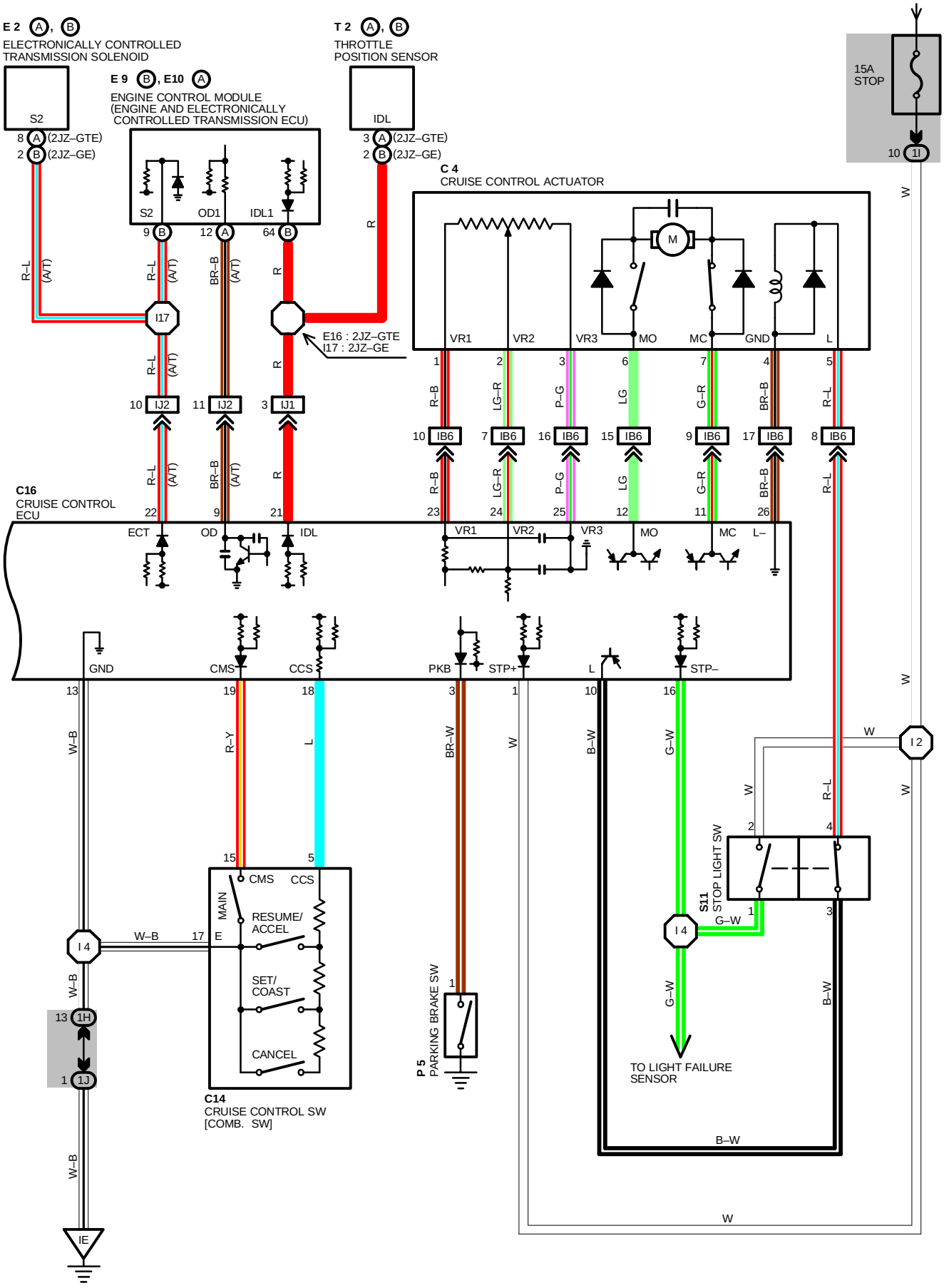

SYSTEM OUTLINE

CURRENT IS APPLIED AT ALL TIMES THROUGH **STOP** FUSE TO **TERMINAL 1** OF THE CRUISE CONTROL ECU, **TERMINAL 2** OF STOP LIGHT SW, AND ALSO THROUGH THE **ECU–B** FUSE TO **TERMINAL 15** OF CRUISE CONTROL ECU.

WITH THE IGNITION SW TURNED TO ON, THE CURRENT FLOWS THROUGH **GAUGE** FUSE TO **TERMINAL (A)9** OF COMBINATION METER AND THE CURRENT THROUGH **ECU–IG** FUSE FLOWS TO **TERMINAL 14** OF CRUISE CONTROL ECU.

WHEN THE IGNITION SW IS ON AND THE CRUISE CONTROL MAIN SWITCH IS TURNED ON, A SIGNAL IS INPUT FROM **TERMINAL 15** OF CRUISE CONTROL MAIN SW TO **TERMINAL 19** OF CRUISE CONTROL ECU. AS A RESULT, THE CRUISE CONTROL ECU FUNCTIONS AND THE CURRENT FLOWS THROUGH **TERMINAL 14** OF CRUISE CONTROL ECU TO **TERMINAL 13** OF CRUISE CONTROL ECU → **GROUND**, AND THE CRUISE CONTROL SYSTEM IS IN A CONDITION READY FOR OPERATION.

AT THE SAME TIME, THE CURRENT THROUGH THE **GAUGE** FUSE FLOWS TO **TERMINAL (A)9** OF CRUISE CONTROL INDICATOR LIGHT → **TERMINAL (B)6** → **TERMINAL 7** OF CRUISE CONTROL ECU → **TERMINAL 13** → **GROUND**. CAUSING THE CRUISE CONTROL INDICATOR LIGHT TO LIGHT UP, INDICATING THAT THE CRUISE CONTROL IS READY FOR OPERATION.

1. SET OPERATION

WHEN THE CRUISE CONTROL MAIN SW IS TURNED ON AND THE SET SW IS PUSHED WITH THE VEHICLE SPEED WITHIN THE SET LIMIT (APPROX. **40** KM/H, **25** MPH TO **200** KM/H, **124** MPH), A SIGNAL IS INPUT TO **TERMINAL 18** OF THE CRUISE CONTROL ECU AND THE VEHICLE SPEED AT THE TIME THE SET SW IS RELEASED, WHICH IS MEMORIZED IN THE ECU AS THE SET SPEED.

2. SET SPEED CONTROL

DURING CRUISE CONTROL DRIVING, THE ECU COMPARES THE SET SPEED MEMORIZED IN THE ECU WITH THE ACTUAL VEHICLE SPEED INPUTS INTO **TERMINAL 20** OF THE CRUISE CONTROL ECU FROM THE SPEED SENSOR, AND CONTROLS THE CRUISE CONTROL ACTUATOR TO MAINTAIN THE SET SPEED.

WHEN THE ACTUAL SPEED IS LOWER THAN THE SET SPEED, THE ECU CAUSES THE CURRENT TO THE CRUISE CONTROL ACTUATOR TO FLOW FROM **TERMINAL 12** → **TERMINAL 6** OF CRUISE CONTROL ACTUATOR → **TERMINAL 7** → **TERMINAL 11** OF CRUISE CONTROL ECU. AS A RESULT, THE MOTOR IN THE CRUISE CONTROL ACTUATOR IS ROTATED TO OPEN THE THROTTLE VALVE AND THE THROTTLE CABLE IS PULLED TO INCREASE THE VEHICLE SPEED. WHEN THE ACTUAL DRIVING SPEED IS HIGHER THAN THE SET SPEED, THE CURRENT TO CRUISE CONTROL ACTUATOR FLOWS FROM **TERMINAL 11** OF ECU → **TERMINAL 7** OF CRUISE CONTROL ACTUATOR → **TERMINAL 6** → **TERMINAL 12** OF CRUISE CONTROL ECU.

THIS CAUSES THE MOTOR IN THE CRUISE CONTROL ACTUATOR TO ROTATE TO CLOSE THE THROTTLE VALVE AND RETURN THE THROTTLE CABLE TO DECREASE THE VEHICLE SPEED.

3. COAST CONTROL

DURING THE CRUISE CONTROL DRIVING, WHILE THE COAST SW IS ON, THE CRUISE CONTROL ACTUATOR RETURNS THE THROTTLE CABLE TO CLOSE THE THROTTLE VALVE AND DECREASE THE DRIVING SPEED. THE VEHICLE SPEED WHEN THE COAST SWITCH IS TURNED OFF IS MEMORIZED AND THE VEHICLE CONTINUES AT THE NEW SET SPEED.

4. ACCEL CONTROL

DURING CRUISE CONTROL DRIVING, WHILE THE ACCEL SW IS TURNED ON, THE CRUISE CONTROL ACTUATOR PULLS THE THROTTLE CABLE TO OPEN THE THROTTLE VALVE AND INCREASE THE DRIVING SPEED.

THE VEHICLE SPEED WHEN THE ACCEL SW IS TURNED OFF IS MEMORIZED AND THE VEHICLE CONTINUES AT THE NEW SET SPEED.

5. RESUME CONTROL

UNLESS THE VEHICLE SPEED FALLS BELOW THE MINIMUM SPEED LIMIT (APPROX. **40** KM/H, **25** MPH) AFTER CANCELING THE SET SPEED BY THE CANCEL SW, PUSHING THE RESUME SW WILL CAUSE THE VEHICLE TO RESUME THE SPEED SET BEFORE THE CANCELLATION.

6. MANUAL CANCEL MECHANISM

IF ANY OF THE FOLLOWING OPERATIONS OCCUR DURING CRUISE CONTROL OPERATION, THE MAGNETIC CLUTCH OF THE ACTUATOR TURNS OFF AND THE MOTOR ROTATES TO CLOSE THE THROTTLE VALVE AND THE CRUISE CONTROL IS RELEASED.

- PLACING THE SHIFT LEVER IN EXCEPT “D” POSITION (PARK/NEUTRAL POSITION SW (NEUTRAL START SW EXCEPT “D” POSITION)). “SIGNAL IS NOT INPUT TO **TERMINAL 2** OF ECU” (A/T).
- DEPRESSING THE BRAKE PEDAL (STOP LIGHT SW ON). “SIGNAL IS INPUT TO **TERMINAL 16** OF ECU”
- PULLING THE PARKING BRAKE LEVER (PARKING BRAKE SW ON). “SIGNAL INPUT TO **TERMINAL 3** OF ECU”
- PUSHING THE CANCEL SWITCH (CANCEL SW ON). “SIGNAL IS INPUT TO **TERMINAL 18** OF ECU”
- DEPRESSING THE CLUTCH PEDAL (CRUISE CONTROL CLUTCH SW OFF). “SIGNAL IS NOT INPUT TO **TERMINAL 2** OF ECU”

7. AUTO CANCEL FUNCTION

A) IF ANY OF THE FOLLOWING OPERATING CONDITIONS OCCUR DURING CRUISE CONTROL OPERATION, THE SET SPEED IS ERASED, CURRENT FLOW TO MAGNETIC CLUTCH IS STOPPED AND THE CRUISE CONTROL IS RELEASED. (MAIN SW TURNS OFF).

WHEN THIS OCCURS, THE IGNITION SW MUST BE TURNED OFF ONCE BEFORE THE MAIN SW WILL TURN ON.

- OVER CURRENT TO TRANSISTOR DRIVING MOTOR AND/OR MAGNETIC CLUTCH.
- WHEN CURRENT CONTINUED TO FLOW TO THE MOTOR INSIDE THE ACTUATOR IN THE THROTTLE VALVE “OPEN” DIRECTION.
- OPEN CIRCUIT IN MAGNETIC CLUTCH.
- MOMENTARY INTERRUPTION OF VEHICLE SPEED SIGNAL.
- SHORT CIRCUIT IN CRUISE CONTROL SW.
- MOTOR DOES NOT OPERATE DESPITE THE MOTOR DRIVE SIGNAL BEING OUTPUT.

B) IF ANY OF THE FOLLOWING CONDITIONS OCCUR DURING CRUISE CONTROL OPERATION, THE SET SPEED IS ERASED AND THE CRUISE CONTROL IS RELEASED. (THE POWER OF MAGNETIC CLUTCH IS CUT OFF UNTIL THE SET SW IS “ON” AGAIN.)

- WHEN THE VEHICLE SPEED FALLS BELOW THE MINIMUM SPEED LIMIT, APPROX. **40** KM/H (**25** MPH)
- WHEN THE VEHICLE SPEED FALLS MORE THAN **16** KM/H (**10** MPH) BELOW THE SET SPEED, E.G. ON AN UPWARD SLOPE.
- WHEN POWER TO THE CRUISE CONTROL SYSTEM IS MOMENTARILY CUT OFF.

C) IF ANY OF THE FOLLOWING CONDITIONS OCCUR DURING CRUISE CONTROL OPERATION, THE CRUISE CONTROL IS RELEASED.

- OPEN CIRCUIT FOR **TERMINAL 1** OF CRUISE CONTROL ECU AND **TERMINAL 2** OF STOP LIGHT SW.

8. AUTOMATIC TRANSMISSION CONTROL FUNCTION

- IN OVERDRIVE. IF THE VEHICLE SPEED BECOMES LOWER THAN THE OVERDRIVE CUT SPEED (SET SPEED MINUS APPROX. **4** KM/H, **2.5** MPH) DURING CRUISE CONTROL OPERATION, SUCH AS DRIVING UP A HILL, THE OVERDRIVE IS RELEASED AND THE POWER INCREASED TO PREVENT A REDUCTION IN VEHICLE SPEED.
- AFTER RELEASING THE OVERDRIVE, VEHICLE SPEED BECOMES HIGHER THAN THE OVERDRIVE RETURN SPEED (SET SPEED MINUS APPROX. **2** KM/H, **1.2** MPH) AND THE ECU JUDGES BY THE SIGNALS FROM POTENTIONMETER OF THE ACTUATOR THAT THE UPWARD SLOPE HAS FINISHED, OVERDRIVE IS RESUMED AFTER APPROXIMATELY **2** SECONDS.
- DURING CRUISE CONTROL DRIVING, THE CRUISE CONTROL OPERATION SIGNAL IS OUTPUT FROM THE CRUISE CONTROL ECU TO THE ENGINE CONTROL MODULE (ENGINE AND ELECTRONICALLY CONTROLLED TRANSMISSION ECU). UPON RECEIVING THIS SIGNAL, THE ENGINE CONTROL MODULE (ENGINE AND ELECTRONICALLY CONTROLLED TRANSMISSION ECU) CHANGES THE SHIFT PATTERN TO NORMAL.

TO MAINTAIN SMOOTH CRUISE CONTROL OPERATION (ON A DOWNWARD SLOPE ETC.), LOCK–UP RELEASE OF THE TRANSMISSION WHEN THE IDLING POINT OF THE THROTTLE POSITION IS “ON” IS FORBIDDEN.

SERVICE HINTS

C 4 CRUISE CONTROL ACTUATOR

1–3 : APPROX. **2** K
5–4 : APPROX. **38.5**

C14 CRUISE CONTROL SW [COMB.SW]

15–17 : CONTINUOUS WITH MAIN SW ON
5–17 : APPROX. **418** WITH CANCEL SW ON
: APPROX. **68** WITH RESUME/ACCEL SW ON
: APPROX. **198** WITH SET/COAST SW ON

C16 CRUISE CONTROL ECU

14–GROUND : APPROX. **12** VOLTS WITH IGNITION SW AT **ON** POSITION
1, 15–GROUND : ALWAYS APPROX. **12** VOLTS
3–GROUND : CONTINUOUS WITH PARKING BRAKE LEVER PULLED UP (ONE OF THE CANCEL SW)
20–GROUND : **4** PULSE WITH **1** ROTATION OF ROTOR SHAFT
18–GROUND : APPROX. **418** WITH CANCEL SW ON IN CONTROL SW
: APPROX. **198** WITH SET/COAST SW ON IN CONTROL SW
: APPROX. **68** WITH RESUME/ACCEL SW ON IN CONTROL SW
13–GROUND : ALWAYS CONTINUOUS

CRUISE CONTROL

: PARTS LOCATION

CODE		SEE PAGE	CODE		SEE PAGE	CODE		SEE PAGE
C 4		24 (2JZ–GTE)	D 1		26 (2JZ–GE)	P 5		29
		26 (2JZ–GE)	D 5		28	S11		29
C10	A	28	E 2	A	24 (2JZ–GTE)	T 2	A	25 (2JZ–GTE)
C12	B	28		B	26 (2JZ–GE)		B	27 (2JZ–GE)
C14		28	E 9	B	29	T 2		29
C15		28	E10	A	29	V10		25 (2JZ–GTE)
C16		28	P 2		25 (2JZ–GTE)			27 (2JZ–GE)
D 1		24 (2JZ–GTE)			27 (2JZ–GE)			

: JUNCTION BLOCK AND WIRE HARNESS CONNECTOR

CODE	SEE PAGE	JUNCTION BLOCK AND WIRE HARNESS (CONNECTOR LOCATION)
1E	20	INSTRUMENT PANEL WIRE AND J/B NO.1 (LEFT KICK PANEL)
1H	20	COWL WIRE AND J/B NO.1 (LEFT KICK PANEL)
1I		
1J		

: CONNECTOR JOINING WIRE HARNESS AND WIRE HARNESS

CODE	SEE PAGE	JOINING WIRE HARNESS AND WIRE HARNESS (CONNECTOR LOCATION)
IB6	36	ENGINE ROOM MAIN WIRE AND COWL WIRE (RIGHT KICK PANEL)
IF1	36	INSTRUMENT PANEL WIRE AND COWL WIRE (INSTRUMENT PANEL REINFORCEMENT LH)
IF2		
II1	38	ENGINE WIRE AND INSTRUMENT PANEL WIRE (RIGHT KICK PANEL)
IJ1	38	ENGINE WIRE AND COWL WIRE (RIGHT KICK PANEL)
IJ2		

: GROUND POINTS

CODE	SEE PAGE	GROUND POINTS LOCATION
IE	36	LEFT KICK PANEL
IF		

: SPLICE POINTS

CODE	SEE PAGE	WIRE HARNESS WITH SPLICE POINTS	CODE	SEE PAGE	WIRE HARNESS WITH SPLICE POINTS
E14	32	ENGINE WIRE	I 4	38	COWL WIRE
E16			I 8	38	INSTRUMENT PANEL WIRE
E28	34		I14		
I 2	38	COWL WIRE	I17	38	ENGINE WIRE

C 4 GRAY

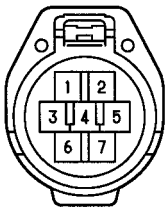

C10 (A) BLUE

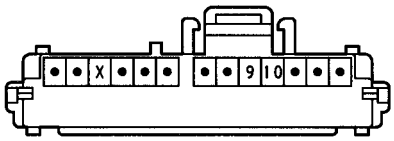

(2JZ-GTE) C12 (B)

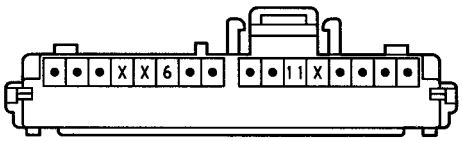

(2JZ-GE) C12 (B)

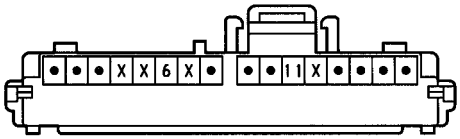

C14 BLACK

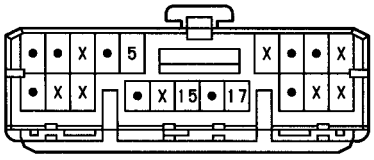

C15



(A/T) C16 GREEN

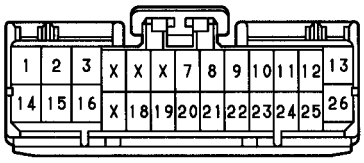

(M/T) C16 GREEN

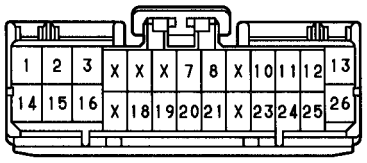

(2JZ-GTE) D 1 BLACK

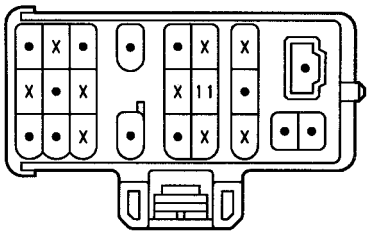

(2JZ-GE) D 1 BLACK

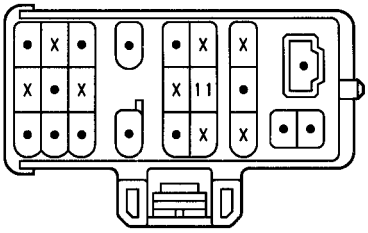

(2JZ-GTE) D 5 DARK GRAY

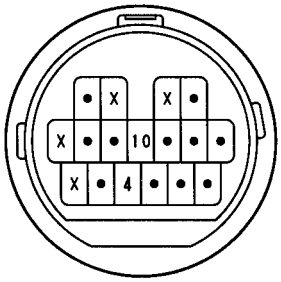

(2JZ-GE A/T) D 5 DARK GRAY

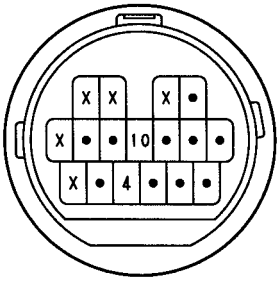

(2JZ-GE M/T) D 5 DARK GRAY

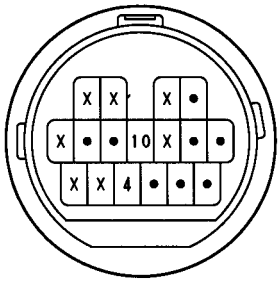

(2JZ-GTE) E 2 (A) GRAY

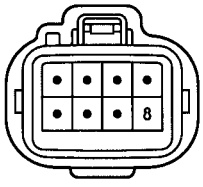

(2JZ-GE) E 2 (B) BLACK

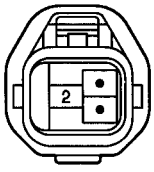

(2JZ-GTE) E 9 (B) DARK GRAY

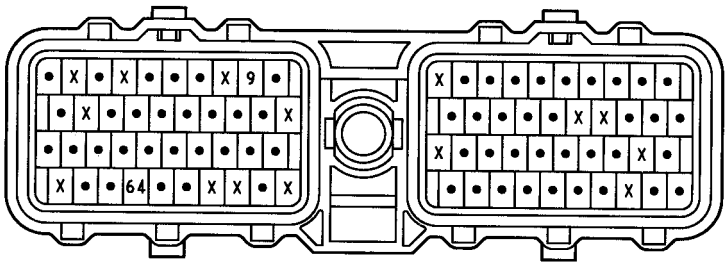

(2JZ-GE) E 9 (B) DARK GRAY

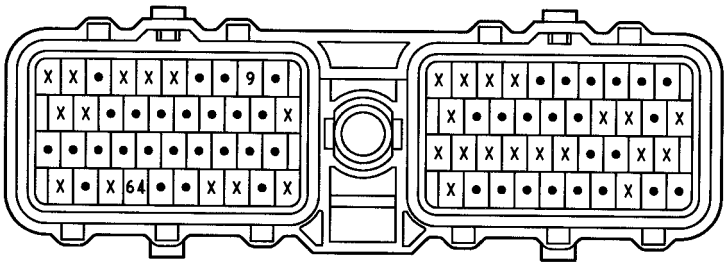

(2JZ-GTE) E10 (A) DARK GRAY

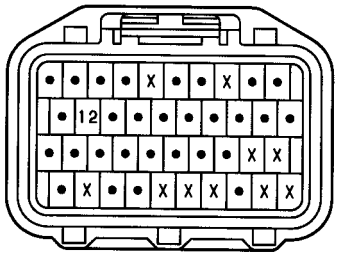

(2JZ-GE) E10 (A) DARK GRAY

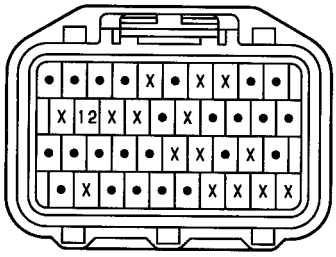

P 2 GRAY

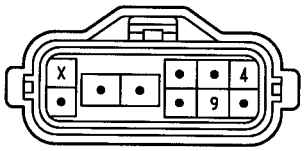

P 5



S11 BLUE

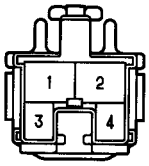

T 2 (A) BLACK

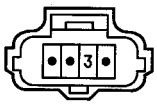

T 2 (B) BLACK

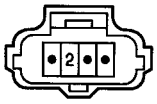

T 6

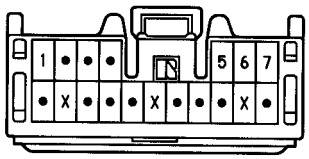

V10 BLACK



C10 (A) BLUE

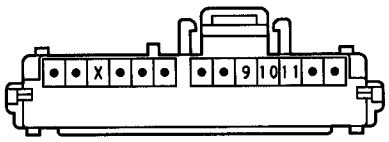

(2JZ-GTE) C12 (B)

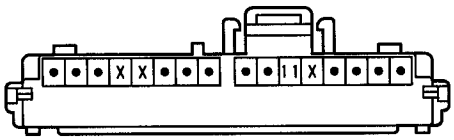

(2JZ-GE) C12 (B)

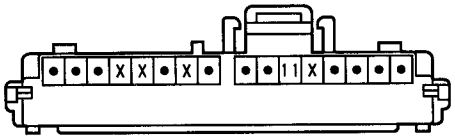

P 1 GRAY



P 4 BLUE



T 6

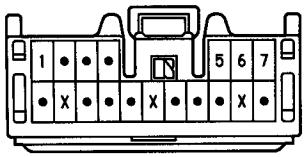

V10 BLACK



PPS (PROGRESSIVE POWER STEERING)

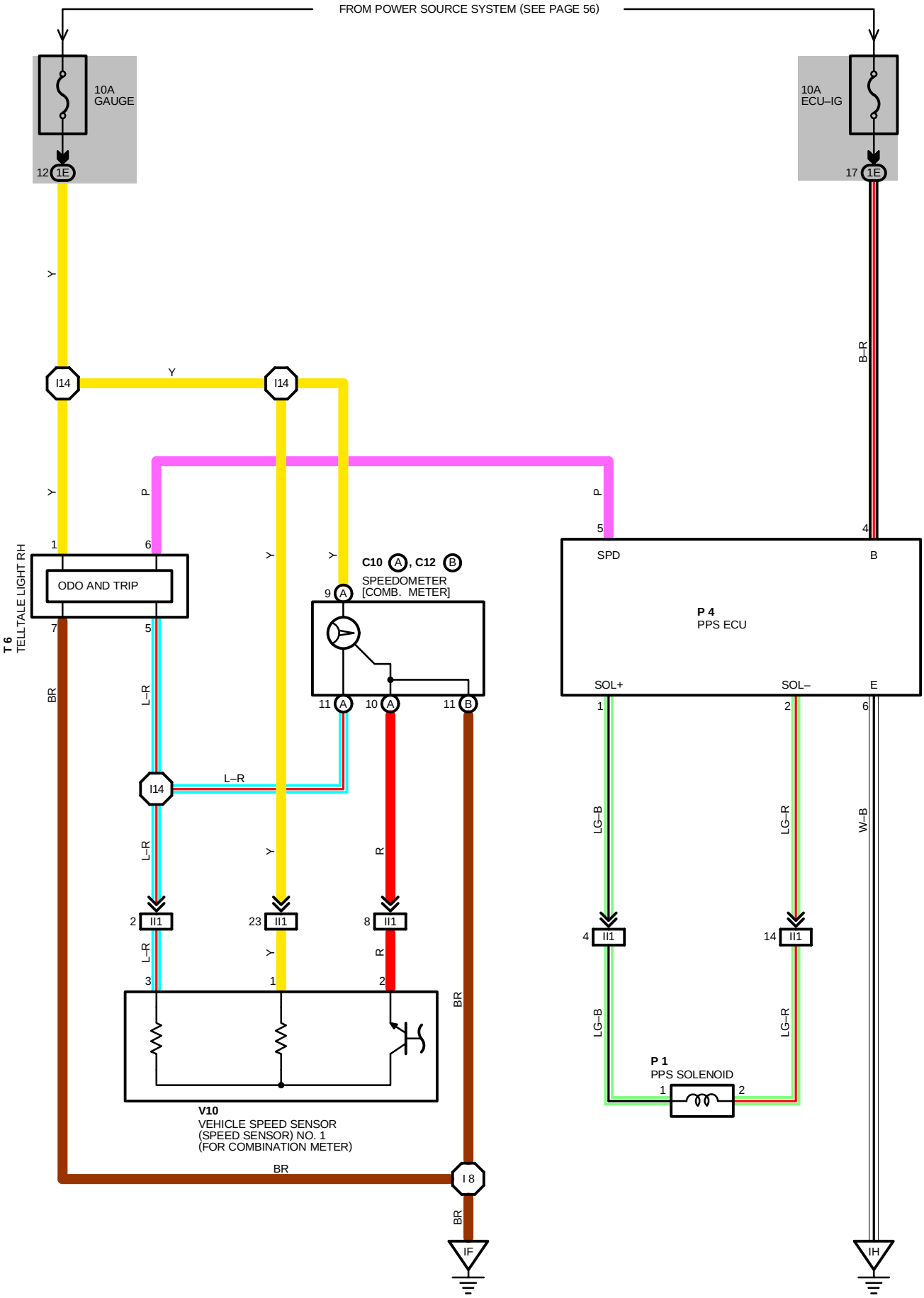

SYSTEM OUTLINE

THE PPS (HYDRAULIC REACTION TYPE) CONTROLS THE HYDRAULIC PRESSURE APPLIED TO THE HYDRAULIC REACTION CHAMBER IN THE GEAR BOX CONTROL UNIT USING THE PPS ECU, TO CHANGE THE STEERING FORCE AND PROVIDE OPTIMUM STEERING FEELING AT ANY VEHICLE SPEEDS AND UNDER ANY STEERING CONDITIONS.

(PPS OPERATION)

WHEN THE IGNITION SW IS TURNED ON THE STARTING CURRENT FLOWS FROM THE **ECU–IG** FUSE TO **TERMINAL 4** OF THE PPS ECU. THE PPS ECU MONITORS VEHICLE SPEED, INPUT SIGNAL TO **TERMINAL 5** OF THE ECU. WHEN THE VEHICLE SPEED IS LOW, THE PPS ECU SENDS A HIGHER–CURRENT FROM **TERMINAL 1** OF THE ECU → **TERMINAL 1** OF THE SOLENOID VALVE → **TERMINAL 2** → **TERMINAL 2** OF THE ECU → **TERMINAL 6** → **GROUND,** INCREASING THE SOLENOID VALVE OPENING ANGLE TO PROVIDE COMFORTABLE STEERING OPERATION. WHEN THE VEHICLE SPEED IS HIGH, THE PPS ECU DECREASES THE SOLENOID VALVE OPENING ANGLE BY REDUCING THE CURRENT TO THE VALVE TO PROVIDE RESPONSIVE STEERING FEELING.

SERVICE HINTS

P 1 PPS SOLENOID
1–2 : APPROX. **7.7** (**25**˚C, **77**˚F)
P 4 PPS ECU
4–GROUND : APPROX. **12** VOLTS WITH THE IGNITION SW AT **ON** POSITION
6–GROUND : ALWAYS CONTINUOUS

: PARTS LOCATION

CODE		SEE PAGE	CODE	SEE PAGE	CODE	SEE PAGE
C10	A	28	**P 1**	27 (2JZ–GE)	**V10**	25 (2JZ–GTE)
C12	B	28	**P 4**	29		27 (2JZ–GE)
P 1		25 (2JZ–GTE)	**T 6**	29		

: JUNCTION BLOCK AND WIRE HARNESS CONNECTOR

CODE	SEE PAGE	JUNCTION BLOCK AND WIRE HARNESS (CONNECTOR LOCATION)
1E	20	INSTRUMENT PANEL WIRE AND J/B NO. 1 (LEFT KICK PANEL)

: CONNECTOR JOINING WIRE HARNESS AND WIRE HARNESS

CODE	SEE PAGE	JOINING WIRE HARNESS AND WIRE HARNESS (CONNECTOR LOCATION)
II1	38	ENGINE WIRE AND INSTRUMENT PANEL WIRE (RIGHT KICK PANEL)

: GROUND POINTS

CODE	SEE PAGE	GROUND POINTS LOCATION
IF	36	LEFT KICK PANEL
IH	36	RIGHT KICK PANEL

: SPLICE POINTS

CODE	SEE PAGE	WIRE HARNESS WITH SPLICE POINTS	CODE	SEE PAGE	WIRE HARNESS WITH SPLICE POINTS
I 8	38	INSTRUMENT PANEL WIRE	**I 8**	38	INSTRUMENT PANEL WIRE

SHIFT LOCK

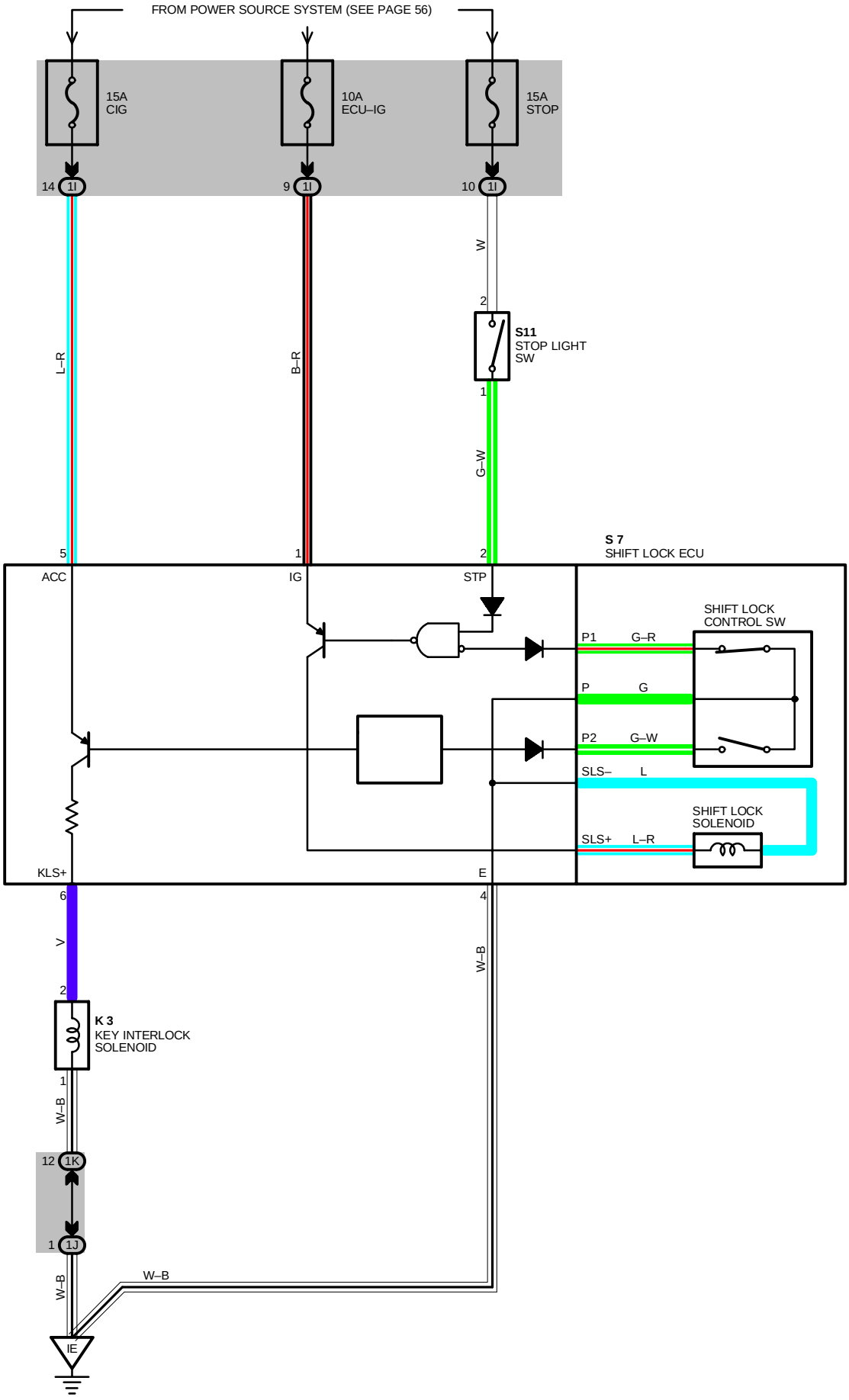
FROM POWER SOURCE SYSTEM (SEE PAGE 56)
15A
CIG
10A
ECU–IG
15A
STOP
14 1I
9 1I
10 1I
W
2
S11
STOP LIGHT
SW
1
L–R
B–R
G–W
5
1
2
S 7
SHIFT LOCK ECU
ACC
IG
STP
SHIFT LOCK
CONTROL SW
P1 G–R
P G
P2 G–W
SLS– L
SHIFT LOCK
SOLENOID
SLS+ L–R
KLS+
E
6
4
V
W–B
2
K 3
KEY INTERLOCK
SOLENOID
1
W–B
12 1K
1 1J
W–B
W–B
IE

SYSTEM OUTLINE

WHEN THE IGNITION SW IS TURNED TO **ACC** POSITION THE CURRENT FROM THE **CIG** FUSE FLOWS TO **TERMINAL 5** OF THE SHIFT LOCK ECU, IN THE **ON** POSITION, THE CURRENT FROM THE **ECU–IG** FUSE FLOWS TO **TERMINAL 1** OF THE ECU.

1. SHIFT LOCK MECHANISM

WITH THE IGNITION SW ON, WHEN A SIGNAL THAT THE BRAKE PEDAL IS DEPRESSED (STOP LIGHT SW ON) AND A SIGNAL THAT THE SHIFT LEVER IS PUT IN "**P**" POSITION (CONTINUITY BETWEEN P1 AND P OF THE SHIFT LOCK CONTROL SW) IS INPUT TO THE ECU, THE ECU OPERATES AND CURRENT FLOWS FROM **TERMINAL 1** OF THE ECU → **TERMINAL 'SLS+'** OF THE SHIFT LOCK SOLENOID → SOLENOID → **TERMINAL 'SLS–'** → **TERMINAL 4** OF THE ECU → **GROUND.** THIS CAUSES THE SHIFT LOCK SOLENOID TO TURN ON (PLATE STOPPER DISENGAGES) AND THE SHIFT LEVER CAN SHIFT INTO POSITION OTHER THAN THE "**P**".

2. KEY INTERLOCK MECHANISM

WITH THE IGNITION SW **ON** OR **ACC** POSITION, WHEN THE SHIFT LEVER IS PUT IN "**P**" POSITION (NO CONTINUITY BETWEEN P2 AND P OF SHIFT LOCK CONTROL SW), THE CURRENT FLOWING FROM **TERMINAL 6** OF THE ECU → KEY INTERLOCK SOLENOID IS CUT OFF. THIS CAUSES THE KEY INTERLOCK SOLENOID TO TURN OFF (LOCK LEVER DISENGAGES FROM **LOCK** POSITION) AND THE IGNITION KEY CAN BE TURNED FROM **ACC** TO **LOCK** POSITION.

SERVICE HINTS

S 7 SHIFT LOCK ECU

5–GROUND : APPROX. **12** VOLTS WITH THE IGNITION SW AT **ACC** OR **ON** POSITION
1–GROUND : APPROX. **12** VOLTS WITH THE IGNITION SW AT **ON** POSITION
4–GROUND : ALWAYS CONTINUOUS
2–GROUND : APPROX. **12** VOLTS WITH THE BRAKE PEDAL DEPRESSED

S11 STOP LIGHT SW

2–1 : CLOSED WITH THE BRAKE PEDAL DEPRESSED

○ : PARTS LOCATION

CODE	SEE PAGE	CODE	SEE PAGE	CODE	SEE PAGE
K 3	29	**S 7**	29	**S11**	29

: JUNCTION BLOCK AND WIRE HARNESS CONNECTOR

CODE	SEE PAGE	JUNCTION BLOCK AND WIRE HARNESS (CONNECTOR LOCATION)
1I	20	COWL WIRE AND J/B NO.1 (LEFT KICK PANEL)
1J		
1K		

▽ : GROUND POINTS

CODE	SEE PAGE	GROUND POINTS LOCATION
IE	36	LEFT KICK PANEL

K 3

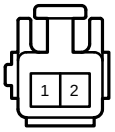

S 7

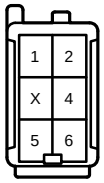

S11 BLUE

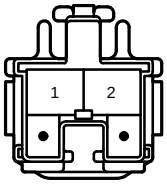

CIGARETTE LIGHTER AND CLOCK

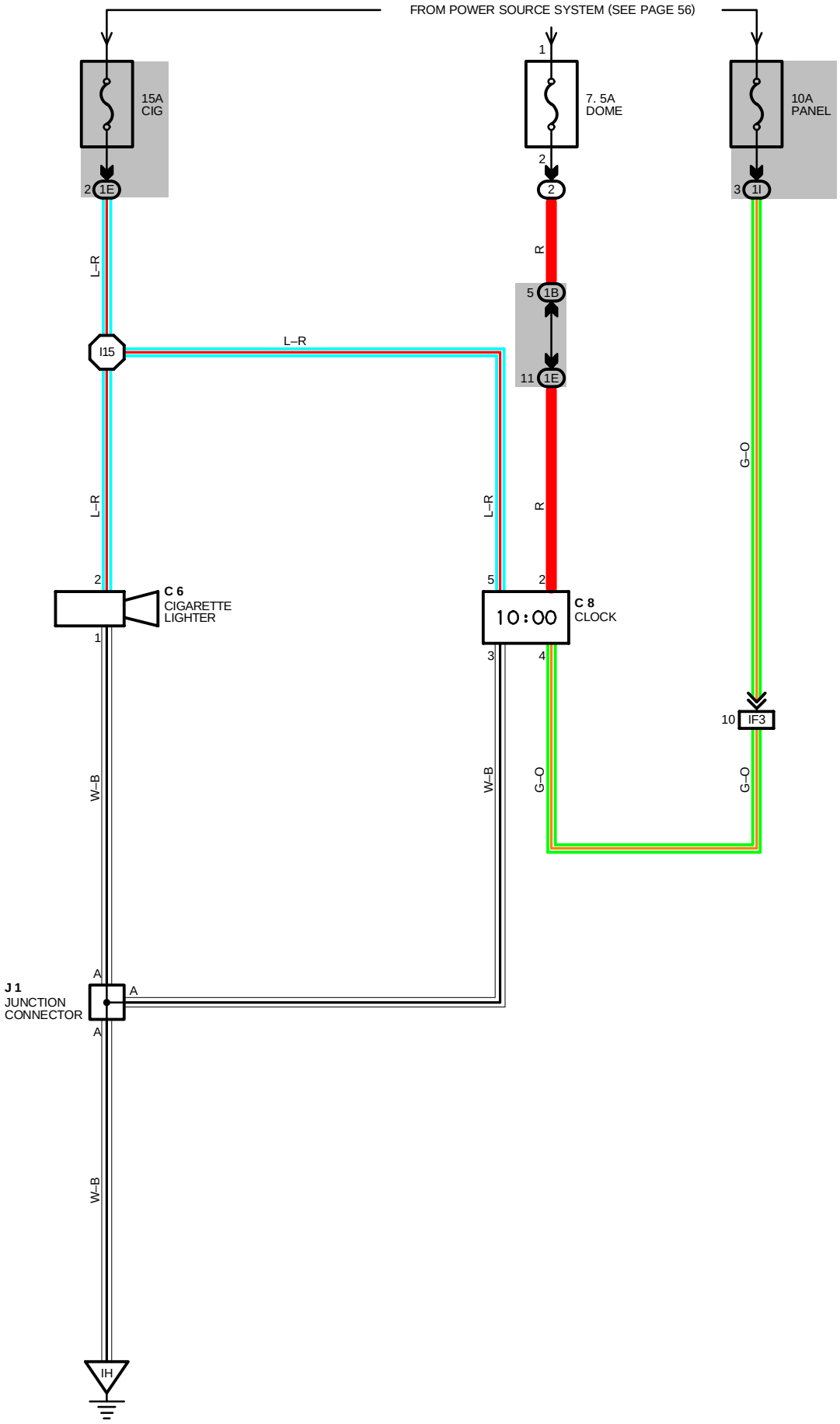

SERVICE HINTS

C 6 CIGARETTE LIGHTER

2–GROUND : APPROX. **12** VOLTS WITH IGNITION SW AT **ACC** OR **ON** POSITION
1–GROUND : ALWAYS CONTINUOUS

C 8 CLOCK

2–GROUND : ALWAYS **12** VOLTS (POWER FOR CLOCK)
5–GROUND : APPROX. **12** VOLTS WITH IGNITION SW AT **ACC** OR **ON** POSITION (POWER FOR INDICATION)
3–GROUND : ALWAYS CONTINUOUS

: PARTS LOCATION

CODE	SEE PAGE	CODE	SEE PAGE	CODE	SEE PAGE
C 6	28	**C 8**	28	**J 1**	29

: RELAY BLOCKS

CODE	SEE PAGE	RELAY BLOCKS (RELAY BLOCK LOCATION)
2	22	R/B NO. 2 (ENGINE COMPARTMENT LEFT)

: JUNCTION BLOCK AND WIRE HARNESS CONNECTOR

CODE	SEE PAGE	JUNCTION BLOCK AND WIRE HARNESS (CONNECTOR LOCATION)
1B	20	ENGINE ROOM MAIN WIRE AND J/B NO.1 (LEFT KICK PANEL)
1E	20	INSTRUMENT PANEL WIRE AND J/B NO.1 (LEFT KICK PANEL)
1I	20	COWL WIRE AND J/B NO.1 (LEFT KICK PANEL)

: CONNECTOR JOINING WIRE HARNESS AND WIRE HARNESS

CODE	SEE PAGE	JOINING WIRE HARNESS AND WIRE HARNESS (CONNECTOR LOCATION)
IF3	36	INSTRUMENT PANEL WIRE AND COWL WIRE (RIGHT KICK PANEL)

: GROUND POINTS

CODE	SEE PAGE	GROUND POINTS LOCATION
IH	36	RIGHT KICK PANEL

: SPLICE POINTS

CODE	SEE PAGE	WIRE HARNESS WITH SPLICE POINTS	CODE	SEE PAGE	WIRE HARNESS WITH SPLICE POINTS
I15	38	INSTRUMENT PANEL WIRE			

C 6



C 8 BLACK

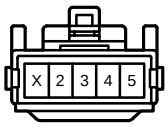

J 1

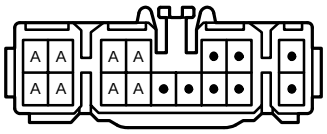

(HINT : SEE PAGE 7)

REMOTE CONTROL MIRROR

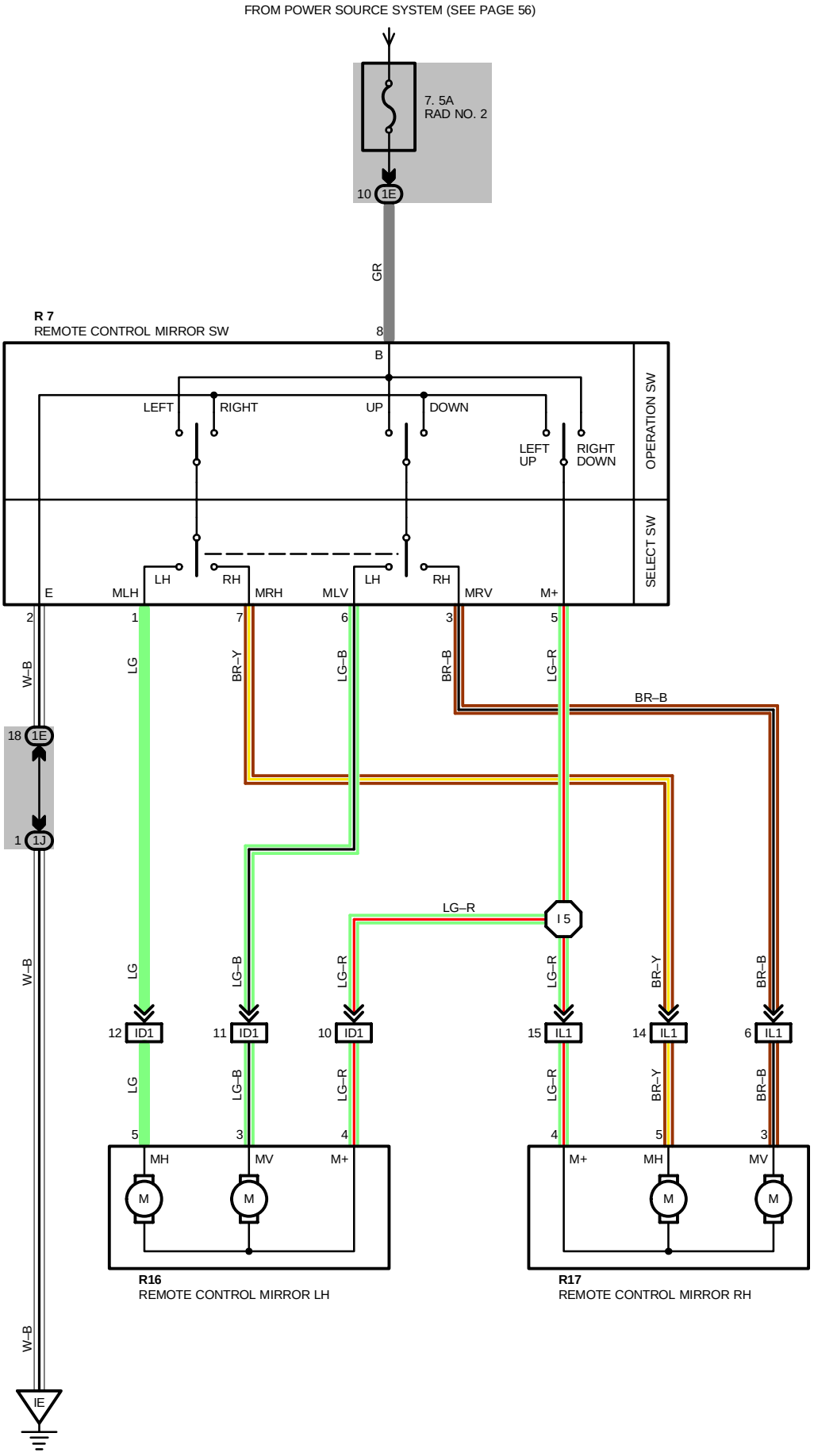

SERVICE HINTS

R 7 REMOTE CONTROL MIRROR SW

8–GROUND : APPROX. **12** VOLTS WITH IGNITION SW AT **ACC** OR **ON** POSITION
5–2 : CONTINUOUS WITH OPERATION SW AT **LEFT** OR **UP** POSITION
8–5 : CONTINUOUS WITH OPERATION SW AT **RIGHT** OR **DOWN** POSITION
2–GROUND : ALWAYS CONTINUOUS

: PARTS LOCATION

CODE	SEE PAGE	CODE	SEE PAGE	CODE	SEE PAGE
R 7	29	**R16**	30	**R17**	30

: JUNCTION BLOCK AND WIRE HARNESS CONNECTOR

CODE	SEE PAGE	JUNCTION BLOCK AND WIRE HARNESS (CONNECTOR LOCATION)
1E	20	INSTRUMENT PANEL WIRE AND J/B NO.1 (LEFT KICK PANEL)
1J	20	COWL WIRE AND J/B NO.1 (LEFT KICK PANEL)

: CONNECTOR JOINING WIRE HARNESS AND WIRE HARNESS

CODE	SEE PAGE	JOINING WIRE HARNESS AND WIRE HARNESS (CONNECTOR LOCATION)
ID1	36	FRONT DOOR LH WIRE AND INSTRUMENT PANEL WIRE (LEFT KICK PANEL)
IL1	38	FRONT DOOR RH WIRE AND INSTRUMENT PANEL WIRE (RIGHT KICK PANEL)

: GROUND POINTS

CODE	SEE PAGE	GROUND POINTS LOCATION
IE	36	LEFT KICK PANEL

: SPLICE POINTS

CODE	SEE PAGE	WIRE HARNESS WITH SPLICE POINTS	CODE	SEE PAGE	WIRE HARNESS WITH SPLICE POINTS
I 5	38	INSTRUMENT PANEL WIRE			

R 7

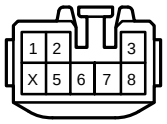

R16

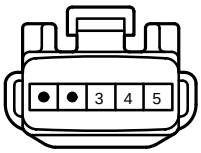

R17

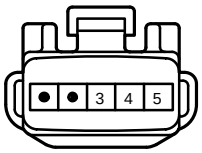

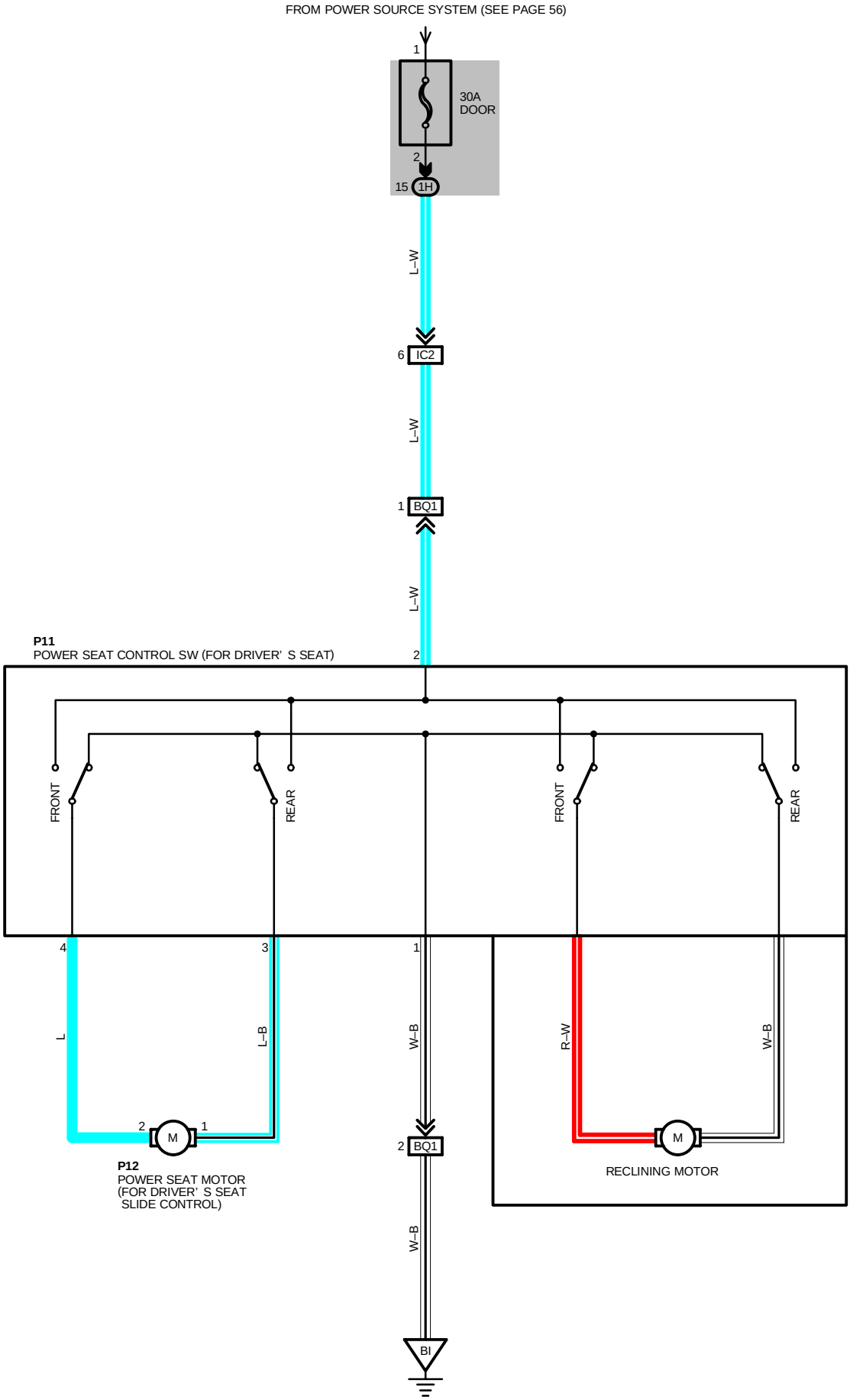
FROM POWER SOURCE SYSTEM (SEE PAGE 56)
1
30A
DOOR
2
15
1H
L–W
6
IC2
L–W
1
BQ1
L–W
P11
POWER SEAT CONTROL SW (FOR DRIVER' S SEAT)
2
FRONT
REAR
FRONT
REAR
4
3
1
L
L–B
W–B
R–W
W–B
2
M
1
2
BQ1
M
P12
POWER SEAT MOTOR
(FOR DRIVER' S SEAT
SLIDE CONTROL)
RECLINING MOTOR
W–B
BI

SERVICE HINTS

P11 POWER SEAT CONTROL SW (FOR DRIVER'S SEAT)
2– GROUND: ALWAYS APPROX. **12** VOLTS
1– GROUND: ALWAYS CONTINUOUS

: PARTS LOCATION

CODE	SEE PAGE	CODE	SEE PAGE	CODE	SEE PAGE
P11	31	**P12**	31		

: JUNCTION BLOCK AND WIRE HARNESS CONNECTOR

CODE	SEE PAGE	JUNCTION BLOCK AND WIRE HARNESS (CONNECTOR LOCATION)
1H	20	COWL WIRE AND J/B NO.1 (LEFT KICK PANEL)

: CONNECTOR JOINING WIRE HARNESS AND WIRE HARNESS

CODE	SEE PAGE	JOINING WIRE HARNESS AND WIRE HARNESS (CONNECTOR LOCATION)
IC2	36	FLOOR NO. 2 WIRE AND COWL WIRE (LEFT KICK PANEL)
BQ1	42	FLOOR NO. 2 WIRE AND SEAT WIRE (UNDER THE FRONT LH SEAT)

: GROUND POINTS

CODE	SEE PAGE	GROUND POINTS LOCATION
BI	40	LEFT QUARTER PILLAR

P11

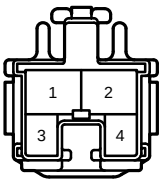

P12

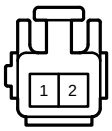

SEAT HEATER (FOR CANADA)

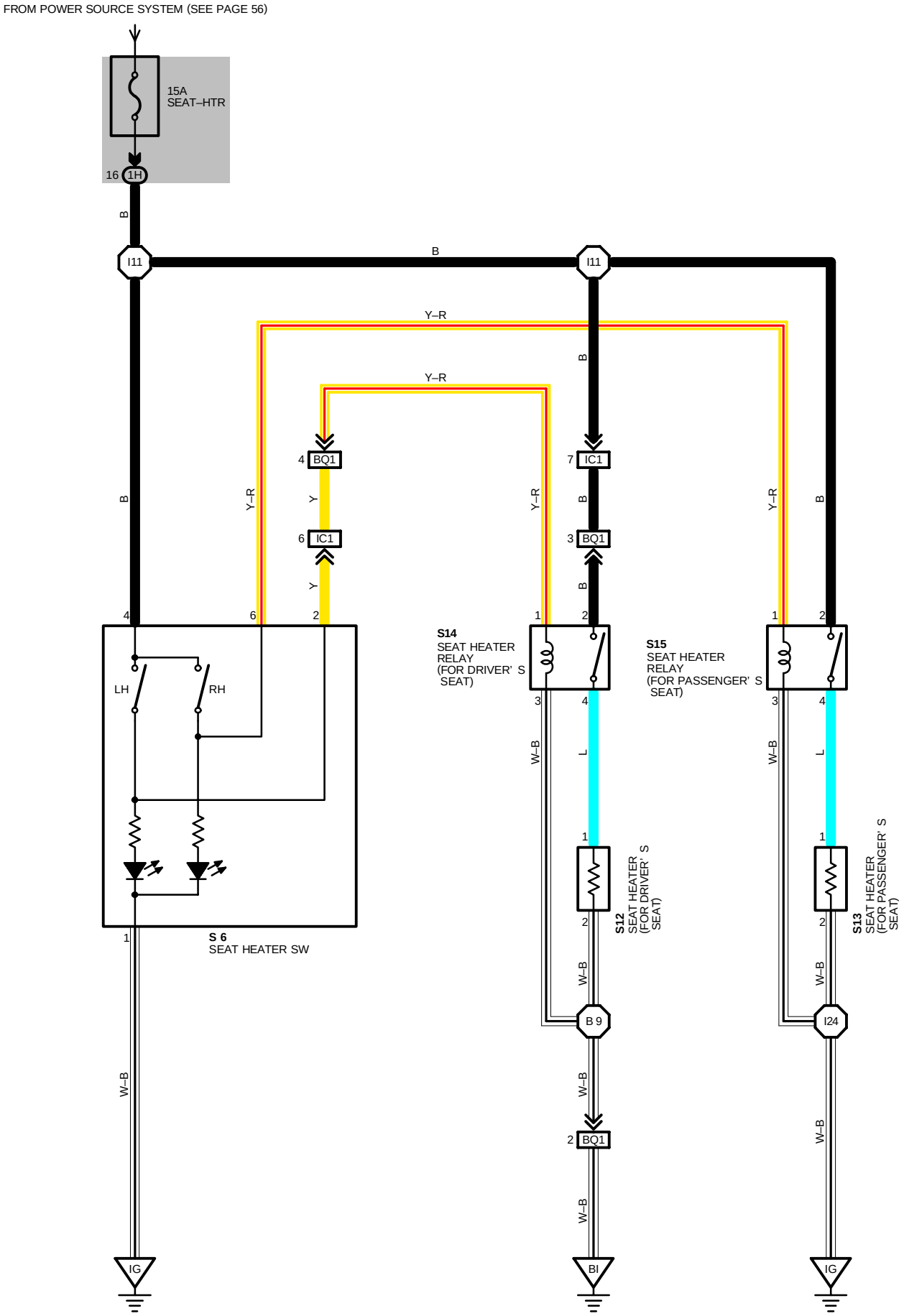

SERVICE HINTS

S 6 SEAT HEATER SW

4–GROUND : APPROX. **12** VOLTS WITH IGNITION SW AT **ON** POSITION

1–GROUND : ALWAYS CONTINUOUS

: PARTS LOCATION

CODE	SEE PAGE	CODE	SEE PAGE	CODE	SEE PAGE
S 6	29	**S13**	31	**S15**	31
S12	31	**S14**	31		

: JUNCTION BLOCK AND WIRE HARNESS CONNECTOR

CODE	SEE PAGE	JUNCTION BLOCK AND WIRE HARNESS (CONNECTOR LOCATION)
1H	20	COWL WIRE AND J/B NO. 1 (LEFT KICK PANEL)

: CONNECTOR JOINING WIRE HARNESS AND WIRE HARNESS

CODE	SEE PAGE	JOINING WIRE HARNESS AND WIRE HARNESS (CONNECTOR LOCATION)
IC1	36	FLOOR NO. 2 WIRE AND COWL WIRE (LEFT KICK PANEL)
BQ1	42	FLOOR NO. 2 WIRE AND SEAT WIRE (UNDER THE FRONT LH SEAT)

: GROUND POINTS

CODE	SEE PAGE	GROUND POINTS LOCATION
IG	36	RIGHT KICK PANEL
BI	40	LEFT QUARTER PILLAR

: SPLICE POINTS

CODE	SEE PAGE	WIRE HARNESS WITH SPLICE POINTS	CODE	SEE PAGE	WIRE HARNESS WITH SPLICE POINTS
I11	38	COWL WIRE	**B 9**	42	SEAT WIRE
I24					

S 6 BLACK

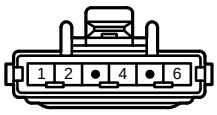

S12 BLUE

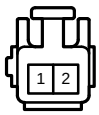

S13 BLUE

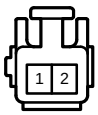

S14



S15



UNLOCK AND SEAT BELT WARNING

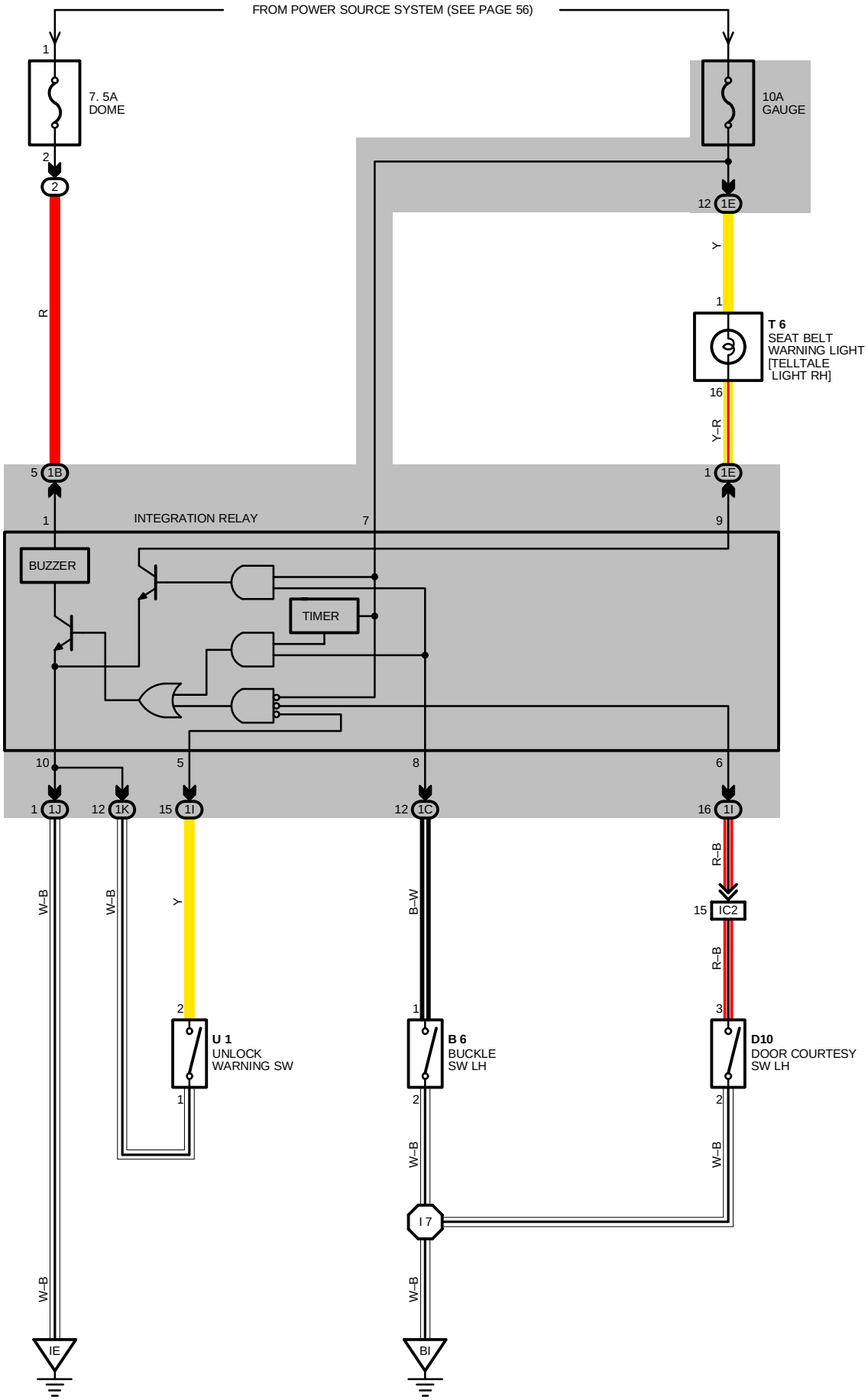

SYSTEM OUTLINE

CURRENT ALWAYS FLOWS TO **TERMINAL 1** OF THE INTEGRATION RELAY THROUGH **DOME** FUSE.

1. SEAT BELT WARNING SYSTEM

WHEN THE IGNITION SW IS TURNED ON, CURRENT FLOWS FROM THE **GAUGE** FUSE TO **TERMINAL 7** OF THE INTEGRATION RELAY. AT THE SAME TIME, CURRENT FLOWS TO **TERMINAL 9** OF THE RELAY FROM THE **GAUGE** FUSE THROUGH THE SEAT BELT WARNING LIGHT. THIS CURRENT ACTIVATES THE INTEGRATION RELAY AND CURRENT FLOWING THROUGH THE WARNING LIGHT FLOWS FROM **TERMINAL 9** OF THE RELAY → **TERMINAL 10** → **GROUND**, CAUSING THE WARNING LIGHT TO LIGHT UP. A BUCKLE SW OFF SIGNAL IS INPUT TO **TERMINAL 8** OF THE RELAY, THE CURRENT FLOWING TO **TERMINAL 7** OF THE RELAY FLOWS THROUGH **TERMINAL 10** → **GROUND** AND THE SEAT BELT WARNING BUZZER SOUNDS FOR APPROX. **4–8** SECONDS. HOWEVER, IF THE SEAT BELT IS PUT ON DURING THIS PERIOD (WHILE THE BUZZER IS SOUNDING), SIGNAL INPUT TO **TERMINAL 8** OF RELAY STOPS AND THE CURRENT FLOW FROM **TERMINAL 7** OF THE RELAY → **TERMINAL 10** → **GROUND** IS CUT, CAUSING THE BUZZER TO STOP.

2. UNLOCK WARNING SYSTEM

WITH THE IGNITION KEY INSERTED IN THE KEY CYLINDER (UNLOCK SW ON), THE IGNITION SW STILL OFF AND DRIVER'S DOOR OPENS (DOOR COURTESY SW ON), WHEN A SIGNAL IS INPUT TO **TERMINAL 6** OF THE RELAY, THE INTEGRATION RELAY OPERATES, CURRENT FLOWS FROM **TERMINAL 7** OF THE RELAY → **TERMINAL 10** → **GROUND** AND UNLOCK WARNING BUZZER SOUNDS.

SERVICE HINTS

B 6 BUCKLE SW LH
1–2 : CLOSED WITH DRIVER'S SEAT BELT IN USE

D10 DOOR COURTESY SW LH
3–2 : CLOSED WITH LH DOOR OPEN

U 1 UNLOCK WARNING SW
2–1 : CLOSED WITH IGNITION KEY IN CYLINDER

INTEGRATION RELAY
10–GROUND : ALWAYS CONTINUOUS
6–GROUND : CONTINUOUS WITH DRIVER'S DOOR OPEN
5–GROUND : CONTINUOUS WITH IGNITION KEY IN CYLINDER
8–GROUND : CONTINUOUS WITH DRIVER'S SEAT BELT IN USE
9–GROUND : **0** VOLTS WITH IGNITION SW ON AND BUCKLE SW OFF
1–GROUND : ALWAYS APPROX. **12** VOLTS

: PARTS LOCATION

CODE	SEE PAGE	CODE	SEE PAGE	CODE	SEE PAGE
B 6	28	**T 6**	29		
D10	30	**U 1**	29		

: RELAY BLOCKS

CODE	SEE PAGE	RELAY BLOCKS (RELAY BLOCK LOCATION)
2	22	R/B NO. 2 (ENGINE COMPARTMENT LEFT)

: JUNCTION BLOCK AND WIRE HARNESS CONNECTOR

CODE	SEE PAGE	JUNCTION BLOCK AND WIRE HARNESS (CONNECTOR LOCATION)
1B	20	ENGINE ROOM MAIN WIRE AND J/B NO. 1 (LEFT KICK PANEL)
1C	20	FLOOR NO. 2 WIRE AND J/B NO. 1 (LEFT KICK PANEL)
1E	20	INSTRUMENT PANEL WIRE AND J/B NO. 1 (LEFT KICK PANEL)
1I	20	COWL WIRE AND J/B NO. 1 (LEFT KICK PANEL)
1J		
1K		

: CONNECTOR JOINING WIRE HARNESS AND WIRE HARNESS

CODE	SEE PAGE	JOINING WIRE HARNESS AND WIRE HARNESS (CONNECTOR LOCATION)
IC2	36	FLOOR NO. 2 WIRE AND COWL WIRE (LEFT KICK PANEL)

: GROUND POINTS

CODE	SEE PAGE	GROUND POINTS LOCATION
IE	36	LEFT KICK PANEL
BI	40	LEFT QUARTER PILLAR

: SPLICE POINTS

CODE	SEE PAGE	WIRE HARNESS WITH SPLICE POINTS	CODE	SEE PAGE	WIRE HARNESS WITH SPLICE POINTS
I 7	38	FLOOR NO. 2 WIRE			

UNLOCK AND SEAT BELT WARNING

B 6

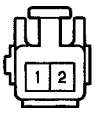

D10

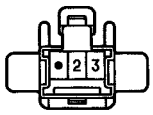

T 6

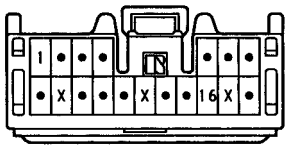

U 1 BLACK

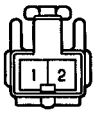

NOTICE: When inspecting or repairing the SRS (supplemental restraint system), perform the operation in accordance with the following precautionary instructions and the procedure and precautions in the Repair Manual for the applicable model year.

- Malfunction symptoms of the supplemental restraint system are difficult to confirm, so the diagnostic trouble codes become the most important source of information when troubleshooting.

  When troubleshooting the supplemental restraint system, always inspect the diagnostic trouble codes before disconnecting the battery.

- Work must be started after 90 seconds from the time the Ignition SW is set to the “LOCK” position and the negative (–) terminal cable is disconnected from the battery.

  (The supplemental restraint system is equipped with a back–up power source so that if work is started within 90 seconds of disconnecting the negative (–) terminal cable of the battery, the SRS may be activated.)

  When the negative (–) terminal cable is disconnected from the battery, memory of the clock and audio systems will be cancelled. So before starting work, make a record of the contents memorized by each memory system. When work is finished, reset the clock and audio system as before and adjust the clock.

  To avoid erasing the memory of each memory system, never use a back–up power supply from outside the vehicle.

- When removing the steering wheel pad or handling a new steering wheel pad, keep the pad upper surface facing upward. Also, lock the lock lever of the twin lock type connector at the rear of the pad and take care not to damage the connector.

  (Storing the pad with its metallic surface up may lead to a serious accident if the SRS inflates for some reason.)

- Always store a removed or new front passenger airbag assembly with the airbag door facing up. Storing the airbag assembly with the airbag door facing down could cause a serious accident if the airbag inflates.

- Store the steering wheel pad where the ambient temperature remains below 93˚C (200˚F), without high humidity and away from electrical noise.

- Never use SRS parts from another vehicle. When replacing SRS parts, replace them with new parts.

- Never disassemble and repair the steering wheel pad, front passenger airbag assembly, center airbag sensor assembly or front airbag sensors.

- Before repairing the body, remove the airbag sensors if during repair shocks are likely to be applied to the sensors due to vibration of the body or direct tapping with tools or other parts.

- Do not reuse a steering wheel pad or front airbag sensors.

  After evaluating whether the center airbag sensor assembly is damaged or not, decide whether or not to reuse it. (See the Repair Manual for the method for evaluating the center airbag sensor assembly.)

- When troubleshooting the supplemental restraint system, use a high–impedance (Min. 10k /V) tester.

- The wire harness of the supplemental restraint system is integrated with the cowl No. 2 wire harness assembly.

  The vehicle wiring harness exclusively for the airbag system is distinguished by corrugated yellow tubing, as are the connectors.

- Do not measure the resistance of the airbag squibs.

  (It is possible this will deploy the airbag and is very dangerous.)

- If the wire harness used in the supplemental restraint system is damaged, replace the whole wire harness assembly.

  When the connector to the front airbag sensors can be repaired alone (when there is no damage to the wire harness), use the repair wire specially designed for the purpose.

  (Refer to the Repair Manual for the applicable Model year for details of the replacement method.)

- INFORMATION LABELS (NOTICES) are attached to the periphery of the SRS components. Follow the instructions on the notices.

The supplemental restraint system has connectors which possess the functions described below:

1. SRS ACTIVATION PREVENTION MECHANISM

   Each connector contains a short spring plate. When the connector is disconnected, the short spring plate automatically connects the power source and grounding terminals of the squib to preclude a potential difference between the terminals.

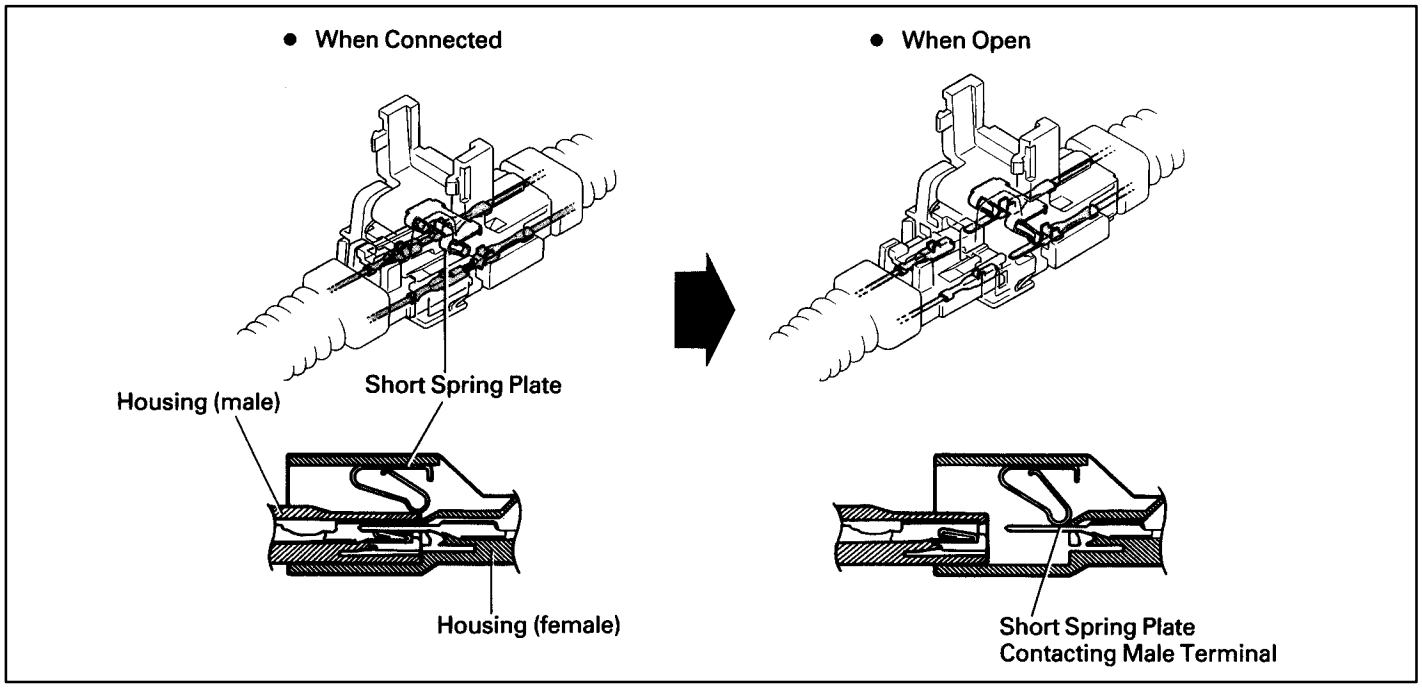

2. ELECTRICAL CONNECTION CHECK MECHANISM

   This mechanism is designed to electrically check if connectors are connected correctly and completely.

   The electrical connection check mechanism is designed so that the connection detection pin connects with the diagnosis terminals when the connector housing lock is in the locked condition.

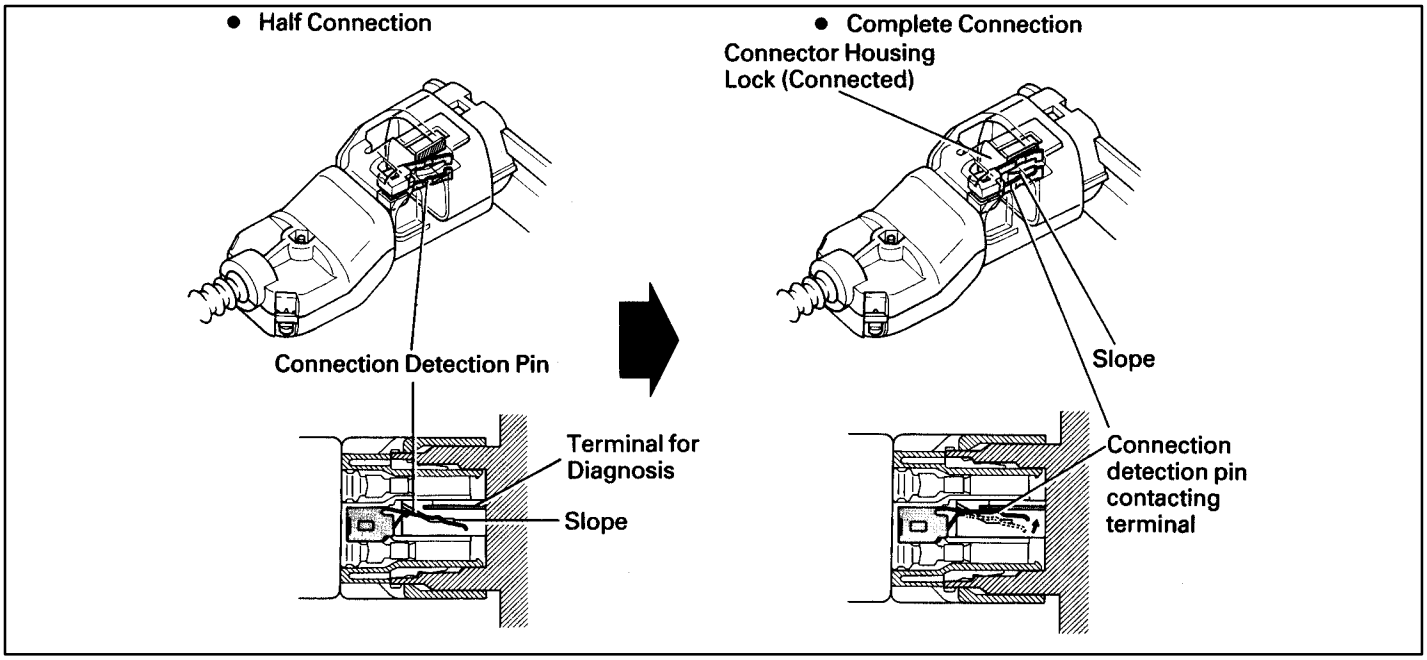

3. CONNECTOR TWIN–LOCK MECHANISM

With this mechanism connectors (male and female connectors) are locked by two locking devices to increase connection reliability. If the primary lock is incomplete, ribs interfere and prevent the secondary lock.

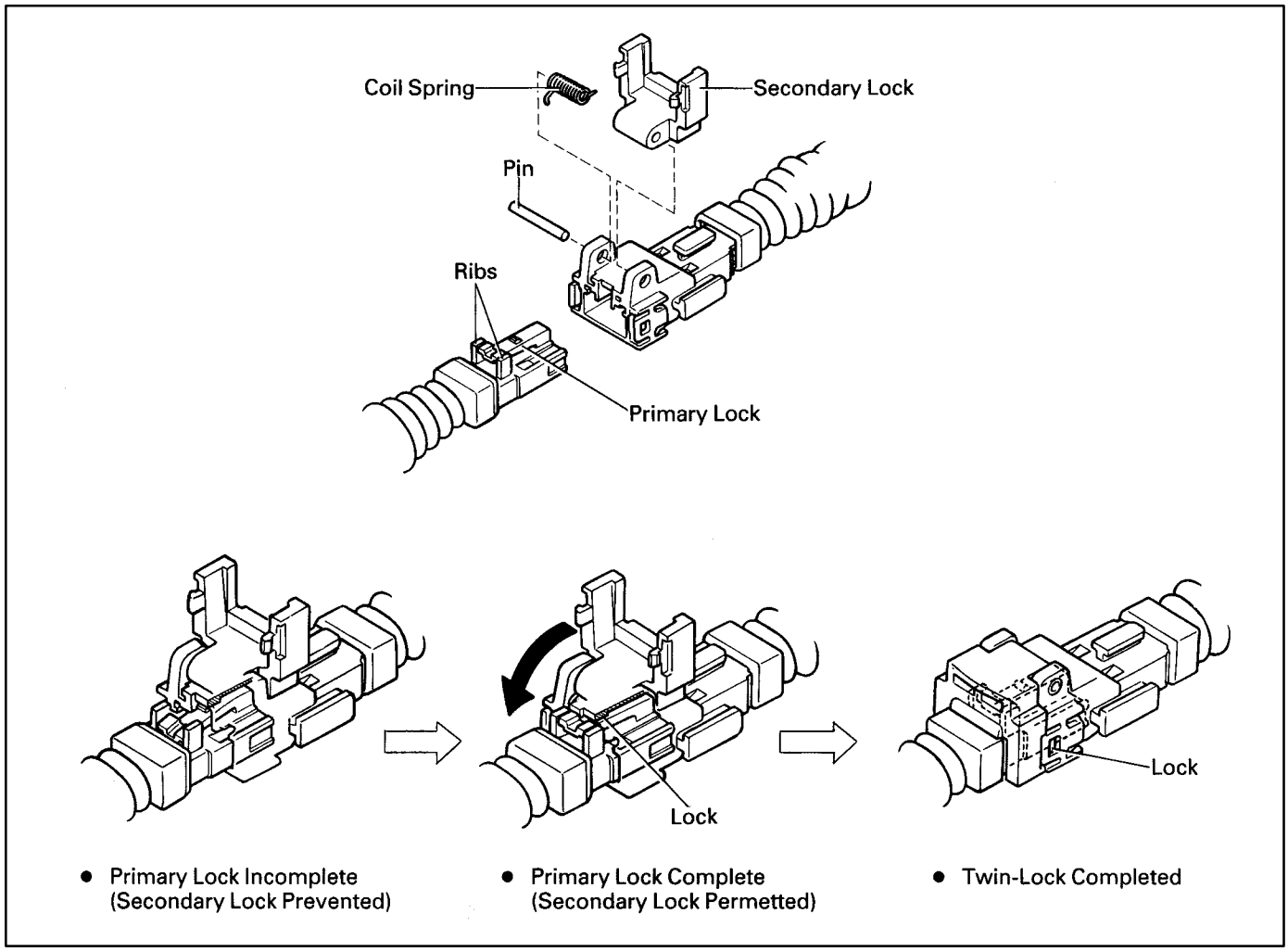

SRS (SUPPLEMENTAL RESTRAINT SYSTEM)

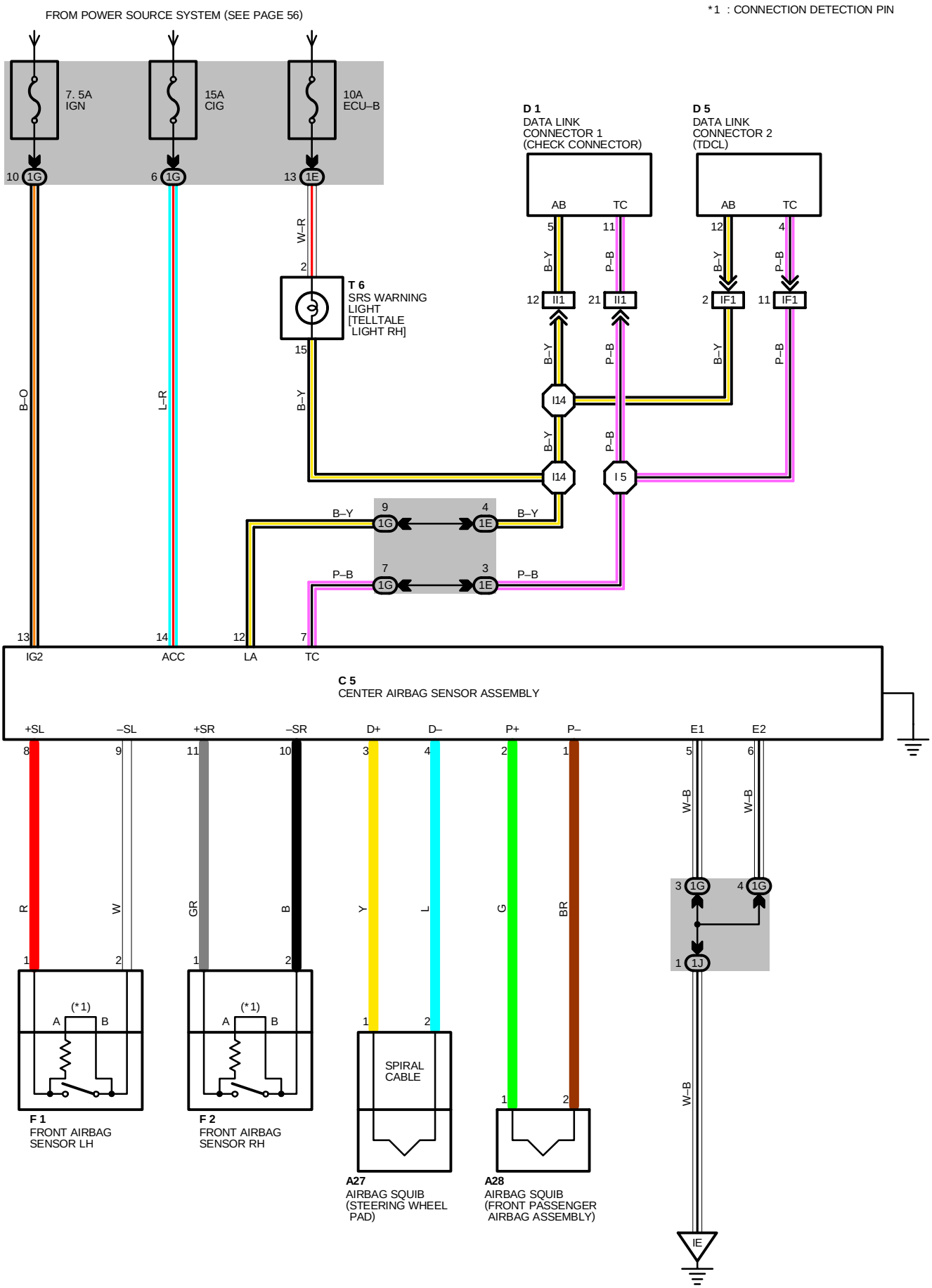

SYSTEM OUTLINE

∗ THE SRS (SUPPLEMENTAL RESTRAINT SYSTEM) IS A DRIVER AND FRONT PASSENGER PROTECTION DEVICE WHICH HAS A SUPPLEMENTAL ROLE TO THE SEAT BELTS.

WHEN THE IGNITION SW IS TURNED TO ACC OR ON, CURRENT FROM THE **CIG** FUSE FLOWS TO **TERMINAL 14** OF THE CENTER AIRBAG SENSOR ASSEMBLY. ONLY WHEN THE IGNITION SW IS ON, THE CURRENT FLOWS FROM THE **IGN** FUSE TO **TERMINAL 13**.

IF AN ACCIDENT OCCURS WHILE DRIVING, WHEN DECELERATION CAUSED BY A FRONTAL IMPACT IS DETECTED BY EACH SENSOR AND SWITCH, AND THE FRONTAL IMPACT EXCEEDS A SET LEVEL (WHEN THE SAFING SENSOR BUILT INTO THE CENTER AIRBAG SENSOR ASSEMBLY IS ON AND THE CENTER AIRBAG SENSOR IS ON, FRONT AIRBAG SENSORS ARE OFF), CURRENT FROM THE **CIG** OR **IGN** FUSE FLOWS TO **TERMINALS 3**, **2,** OF THE CENTER AIRBAG SENSOR ASSEMBLY → **TERMINAL 1** OF THE AIRBAG SQUIB → **TERMINAL 2** → **TERMINALS 4**, **1,** OF THE CENTER AIRBAG SENSOR ASSEMBLY → **TERMINAL 5**, **TERMINAL 6** OR **BODY GROUND** → **GROUND.**

WHEN THE SAFING SENSOR BUILT INTO THE CENTER AIRBAG SENSOR ASSEMBLY IS ON AND THE FRONT AIRBAG SENSOR LH OR RH IS ON, CENTER AIRBAG SENSOR IS OFF AND CURRENT FROM THE **CIG** OR **IGN** FUSE FLOWS TO **TERMINALS 3**, **2**, OF THE CENTER AIRBAG SENSOR ASSEMBLY → **TERMINAL 1** OF THE AIRBAG SQUIB → **TERMINAL 2** → **TERMINALS 4**, **1**, OF THE CENTER AIRBAG SENSOR ASSEMBLY → **TERMINAL 8** OR **11** → **TERMINAL 1** OF THE FRONT AIRBAG SENSOR → **TERMINAL 2** → **TERMINAL 9** OR **10** OF THE CENTER AIRBAG SENSOR ASSEMBLY → **TERMINAL 5**, **TERMINAL 6** OR BODY **GROUND** → **GROUND**, WHEN THE SAFING SENSOR BUILT INTO THE CENTER AIRBAG SENSOR ASSEMBLY IS ON, AND THE FRONT AIRBAG SENSOR LH OR RH IS ON AND CENTER AIRBAG SENSOR IS ON ONE OF THE ABOVE–MENTIONED CIRCUITS IS ACTIVATED SO THAT CURRENT FLOWS TO THE AIRBAG SQUIBS AND CAUSES THEN TO OPERATE.

THE AIRBAG STORED INSIDE THE STEERING WHEEL PAD IS INSTANTANEOUSLY EXPANDED TO SOFTEN THE SHOCK TO THE DRIVER.

THE AIRBAG STORED INSIDE THE PASSENGER'S INSTRUMENT PANEL IS INSTANTANEOUSLY EXPANDED TO SOFTEN THE SHOCK TO THE PASSENGER.

: PARTS LOCATION

CODE	SEE PAGE	CODE	SEE PAGE	CODE	SEE PAGE
A27	28	**D 1**	26 (2JZ–GE)	**F 2**	24 (2JZ–GTE)
A28	28	**D 5**	28		26 (2JZ–GE)
C 5	28	**F 1**	24 (2JZ–GTE)	**T 6**	29
D 1	24 (2JZ–GTE)		26 (2JZ–GE)		

: JUNCTION BLOCK AND WIRE HARNESS CONNECTOR

CODE	SEE PAGE	JUNCTION BLOCK AND WIRE HARNESS (CONNECTOR LOCATION)
1E	20	INSTRUMENT PANEL WIRE AND J/B NO. 1 (LEFT KICK PANEL)
1G	20	COWL WIRE AND J/B NO. 1 (LEFT KICK PANEL)
1J		

: CONNECTOR JOINING WIRE HARNESS AND WIRE HARNESS

CODE	SEE PAGE	JOINING WIRE HARNESS AND WIRE HARNESS (CONNECTOR LOCATION)
IF1	36	INSTRUMENT PANEL WIRE AND COWL WIRE (INSTRUMENT PANEL REINFORCEMENT LH)
II1	38	ENGINE WIRE AND INSTRUMENT PANEL WIRE (RIGHT KICK PANEL)

: GROUND POINTS

CODE	SEE PAGE	GROUND POINTS LOCATION
IE	36	LEFT KICK PANEL

: SPLICE POINTS

CODE	SEE PAGE	WIRE HARNESS WITH SPLICE POINTS	CODE	SEE PAGE	WIRE HARNESS WITH SPLICE POINTS
I 5	38	INSTRUMENT PANEL WIRE	**I14**	38	INSTRUMENT PANEL WIRE

A27 YELLOW

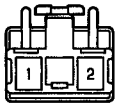

A28 YELLOW

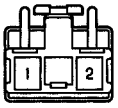

C 5 YELLOW

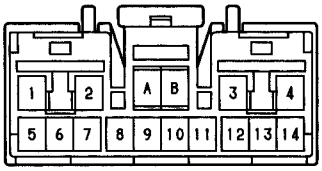

(2JZ-GTE) D 1 BLACK

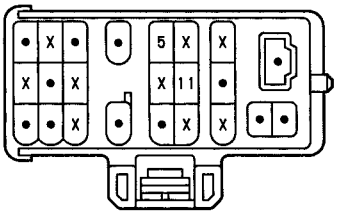

(2JZ-GE) D 1 BLACK

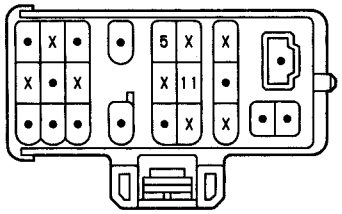

(2JZ-GTE) D 5 DARK GRAY

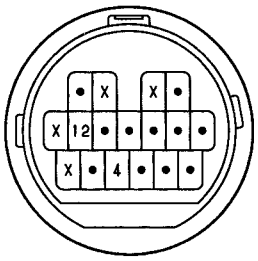

(2JZ-GE A/T) D 5 DARK GRAY

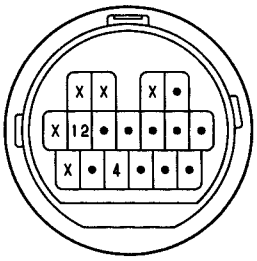

(2JZ-GE M/T) D 5 DARK GRAY

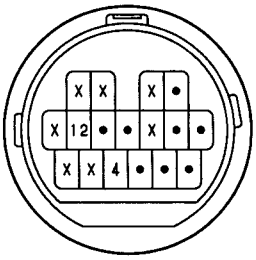

F 1 YELLOW

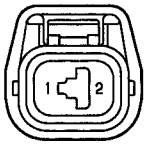

F 2 YELLOW



T 6

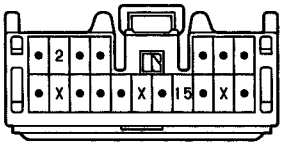

C14 BLACK

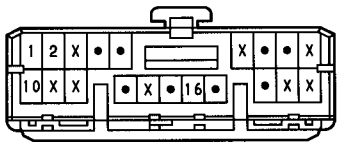

R15

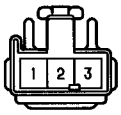

W 1 BLACK



REAR WIPER AND WASHER

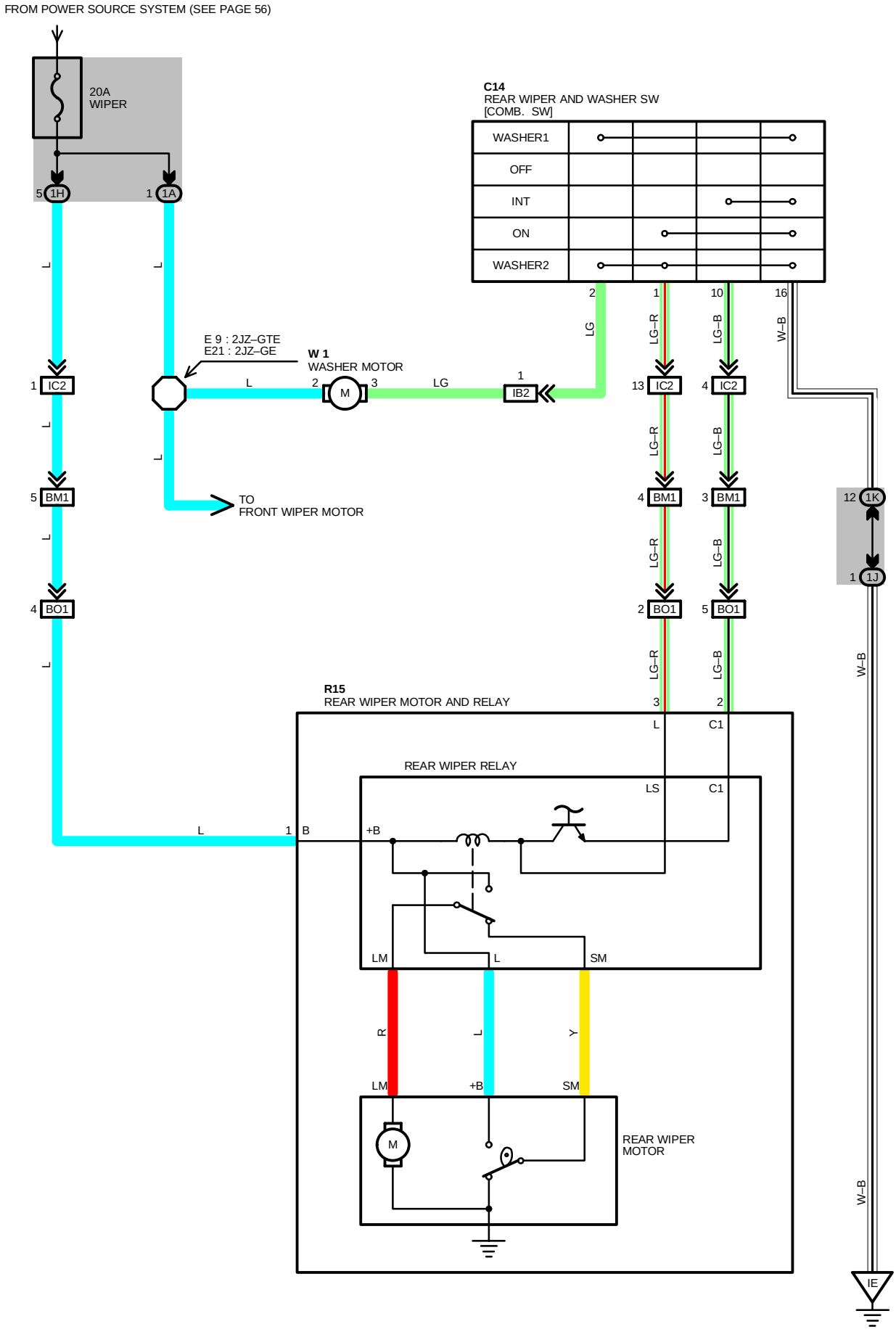

SYSTEM OUTLINE

WHEN THE IGNITION SW IS TURNED ON, CURRENT FLOWS TO **TERMINAL 2** OF THE WASHER MOTOR, **TERMINAL 1** OF THE REAR WIPER MOTOR AND RELAY THROUGH THE WIPER FUSE.

1. REAR WIPER NORMAL OPERATION

WITH THE IGNITION SW TURNED ON AND THE REAR WIPER AND WASHER SW TURNED ON, THE CURRENT FLOWING TO **TERMINAL 1** OF THE REAR WIPER RELAY FLOWS TO **TERMINAL 3** OF THE RELAY → **TERMINAL 1** OF THE REAR WIPER AND WASHER SW → **TERMINAL 16** → TO **GROUND.** THUS, THE RELAY COIL IS ACTIVATED AND THE CURRENT TO **TERMINAL 1** OF THE REALY FLOWS TO **TERMINAL LM** → **TERMINAL LM** OF THE REAR WIPER MOTOR → MOTOR → TO **GROUND** AND CAUSES THE MOTOR TO OPERATE THE WIPER.

2. REAR WIPER INTERMITTENT OPERATION

WHEN THE IGNITION SW IS ON AND THE REAR WIPER AND WASHER SW IS TURNED TO **INT** POSITION, CURRENT FLOWING TO **TERMINAL 1** OF THE REAR WIPER MOTOR AND RELAY FLOWS TO **TERMINAL 2** OF THE RELAY → **TERMINAL 10** OF THE REAR WIPER AND WASHER SW → **TERMINAL 16** → **GROUND**.

THIS CAUSES THE MOTOR TO OPERATE (THE POINT CHANGES) AND THE INTERMITTENT CIRCUIT OF THE RELAY OPERATES. INTERMITTENT OPERATION OF THE CIRCUIT IS CONTROLLED BY THE CHANGING AND DISCHARGING OF THE CONDENSER INSTALLED INSIDE THE RELAY.

3. WASHER OPERATION

WITH THE IGNITION SW TURNED ON AND THE REAR WIPER AND WASHER SW TURNED TO **ON** POSITION, WHEN THE WIPER SW IS TURNED FURTHER, THE CURRENT FLOWING TO **TERMINAL 2** OF THE WASHER MOTOR FLOWS TO **TERMINAL 3** OF THE MOTOR → **TERMINAL 2** OF THE REAR WIPER AND WASHER SW → **TERMINAL 16** → TO **GROUND**, SO THAT THE WASHER MOTOR ROTATES AND THE WINDOW WASHER EJECTS THE SPRAY, ONLY WHILE THE SWITCH IS FULLY TURNED.

WHEN THE WIPER SW IS OFF AND THEN TURNED TO WASHER ON (WIPER OFF SIDE), ONLY THE WASHER OPERATES.

SYSTEM OUTLINE

W 1 WASHER MOTOR

2–GROUND : APPROX. **12** VOLTS WITH IGNITION SW AT **ON** POSITION
3–GROUND : CONTINUOUS WITH WASHER SW TURNED ON

R15 REAR WIPER MOTOR AND RELAY

1–GROUND : APPROX. **12** VOLTS WITH IGNITION SW AT **ON** POSITION
2–GROUND : CONTINUOUS WITH REAR WIPER SW AT **INT** POSITION
3–GROUND : CONTINUOUS WITH REAR WIPER SW AT **ON** POSITION

: PARTS LOCATION

CODE	SEE PAGE	CODE	SEE PAGE	CODE	SEE PAGE
C14	28	**W 1**	25 (2JZ–GTE)		
R15	30		27 (2JZ–GE)		

: JUNCTION BLOCK AND WIRE HARNESS CONNECTOR

CODE	SEE PAGE	JUNCTION BLOCK AND WIRE HARNESS (CONNECTOR LOCATION)
1A	20	ENGINE ROOM MAIN WIRE AND J/B NO. 1 (LEFT KICK PANEL)
1H	20	COWL WIRE AND J/B NO. 1 (LEFT KICK PANEL)
1J		
1K		

: CONNECTOR JOINING WIRE HARNESS AND WIRE HARNESS

CODE	SEE PAGE	JOINING WIRE HARNESS AND WIRE HARNESS (CONNECTOR LOCATION)
IB2	36	ENGINE ROOM MAIN WIRE AND COWL WIRE (LEFT KICK PANEL)
IC2	36	FLOOR NO. 2 WIRE AND COWL WIRE (LEFT KICK PANEL)
BM1	40	BACK DOOR NO. 1 WIRE AND FLOOR NO. 2 WIRE (LEFT SIDE OF PACKAGE TRAY TRIM)
BO1	40	BACK DOOR NO. 2 WIRE AND BACK DOOR NO. 1 WIRE (BACK DOOR UPPER LEFT)

: GROUND POINTS

CODE	SEE PAGE	GROUND POINTS LOCATION
IE	36	LEFT KICK PANEL

: SPLICE POINTS

CODE	SEE PAGE	WIRE HARNESS WITH SPLICE POINTS	CODE	SEE PAGE	WIRE HARNESS WITH SPLICE POINTS
E 9	32	ENGINE ROOM MAIN WIRE	**E21**	34	ENGINE ROOM MAIN WIRE

ELECTRIC TENSION REDUCER

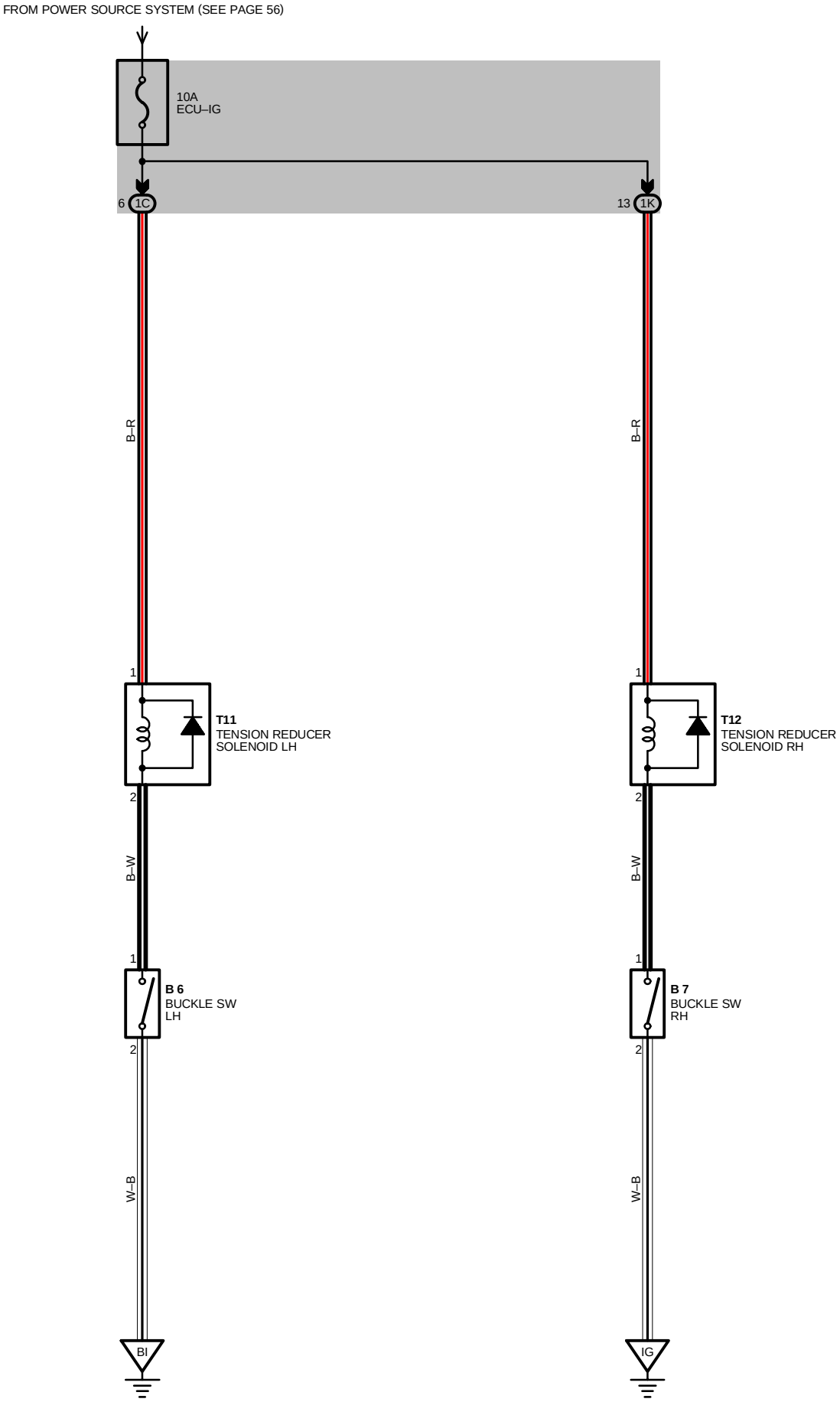

SERVICE HINTS

B 6 BUCKLE SW LH

1–2 : CLOSED WITH DRIVER'S SEAT BELT IN USE

B 7 BUCKLE SW RH

1–2 : CLOSED WITH PASSENGER'S SEAT BELT IN USE

T11, T12 TENSION REDUCER SOLENOID LH, RH

1–GROUND : APPROX. **12** VOLTS WITH IGNITION SW AT **ON** POSITION

: PARTS LOCATION

CODE	SEE PAGE	CODE	SEE PAGE	CODE	SEE PAGE
B 6	28	**T11**	30		
B 7	28	**T12**	30		

: JUNCTION BLOCK AND WIRE HARNESS CONNECTOR

CODE	SEE PAGE	JUNCTION BLOCK AND WIRE HARNESS (CONNECTOR LOCATION)
1C	20	FLOOR NO. 2 WIRE AND J/B NO.1 (LEFT KICK PANEL)
1K	20	COWL WIRE AND J/B NO.1 (LEFT KICK PANEL)

: GROUND POINTS

CODE	SEE PAGE	GROUND POINTS LOCATION
IG	36	RIGHT KICK PANEL
BI	40	LEFT QUARTER PILLAR

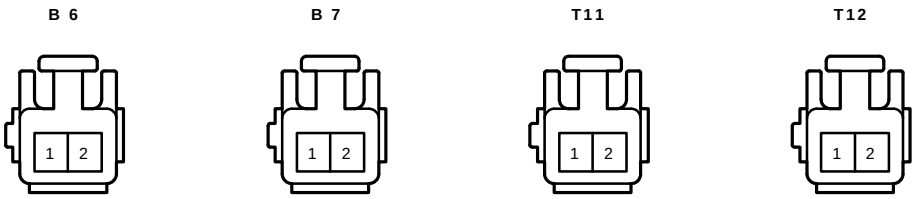

REAR WINDOW DEFOGGER AND MIRROR HEATER

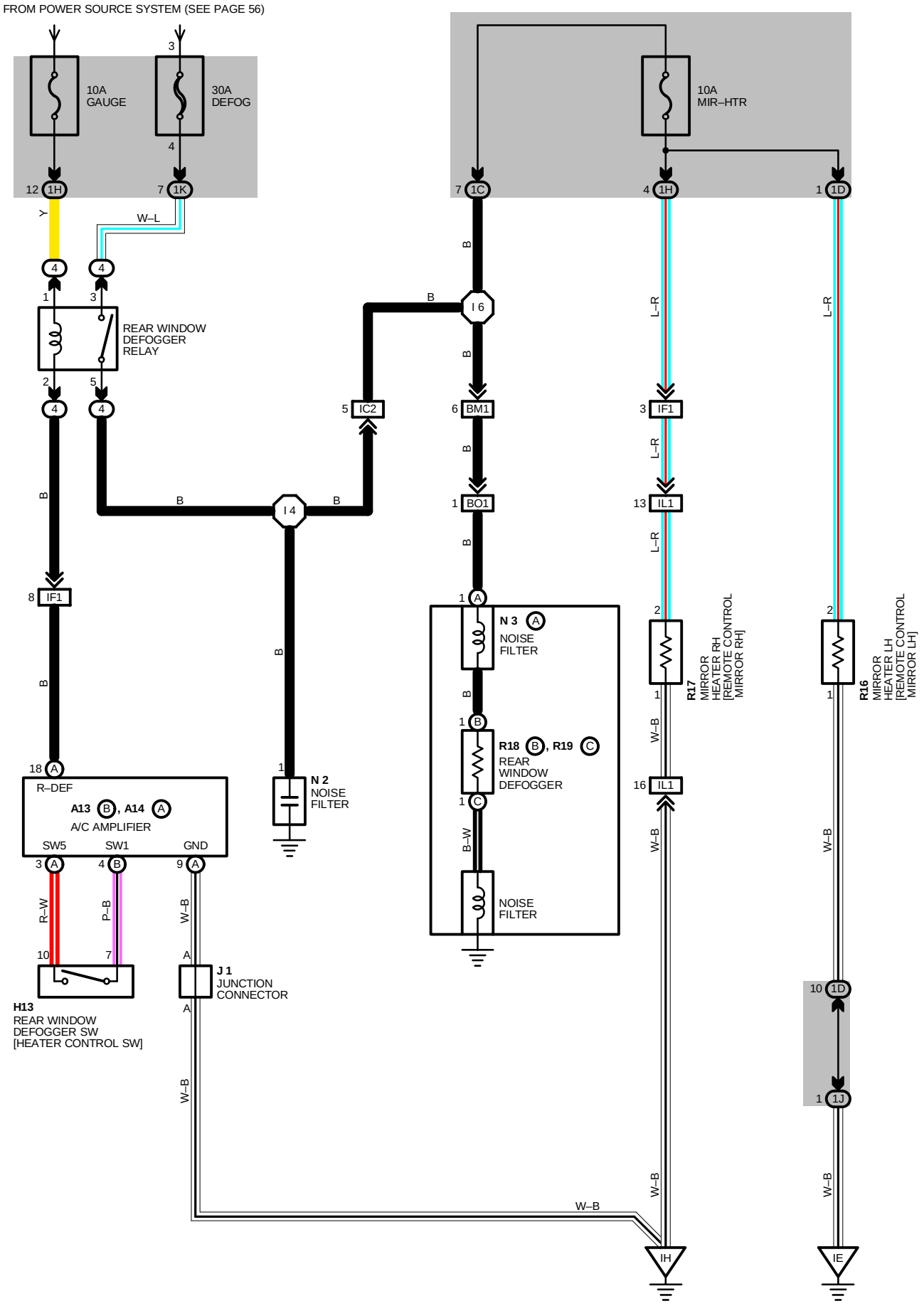

SERVICE HINTS

REAR WINDOW DEFOGGER RELAY

(4) 3 –**(4)** 5 : CLOSED WITH IGNITION SW AT **ON** POSITION AND REAR WINDOW DEFOGGER SW [HEATER CONTROL SW] **ON**

: PARTS LOCATION

CODE		SEE PAGE	CODE		SEE PAGE	CODE		SEE PAGE
A13	B	28	**N 2**		29	**R18**	B	30
A14	A	28	**N 3**	A	30	**R19**	C	30
H13		29	**R16**		30			
J 1		29	**R17**		30			

: RELAY BLOCKS

CODE	SEE PAGE	RELAY BLOCKS (RELAY BLOCK LOCATION)
4	23	R/B NO. 4 (LEFT KICK PANEL)

: JUNCTION BLOCK AND WIRE HARNESS CONNECTOR

CODE	SEE PAGE	JUNCTION BLOCK AND WIRE HARNESS (CONNECTOR LOCATION)
1C	20	FLOOR NO. 2 WIRE AND J/B NO.1 (LEFT KICK PANEL)
1D	20	FRONT DOOR LH WIRE AND J/B NO.1 (LEFT KICK PANEL)
1H	20	COWL WIRE AND J/B NO.1 (LEFT KICK PANEL)
1J		
1K		

: CONNECTOR JOINING WIRE HARNESS AND WIRE HARNESS

CODE	SEE PAGE	JOINING WIRE HARNESS AND WIRE HARNESS (CONNECTOR LOCATION)
IC2	36	FLOOR NO. 2 WIRE AND COWL WIRE (LEFT KICK PANEL)
IF1	36	INSTRUMENT PANEL WIRE AND COWL WIRE (INSTRUMENT PANEL REINFORCEMENT LH)
IL1	38	FRONT DOOR RH WIRE AND INSTRUMENT PANEL WIRE (RIGHT KICK PANEL)
BM1	40	BACK DOOR NO. 1 WIRE AND FLOOR NO. 2 WIRE (LEFT SIDE OF PACKAGE TRAY TRIM)
BO1	40	BACK DOOR NO. 2 WIRE AND BACK DOOR NO. 1 WIRE (BACK DOOR UPPER LEFT)

: GROUND POINTS

CODE	SEE PAGE	GROUND POINTS LOCATION
IE	36	LEFT KICK PANEL
IH	36	RIGHT KICK PANEL

: SPLICE POINTS

CODE	SEE PAGE	WIRE HARNESS WITH SPLICE POINTS	CODE	SEE PAGE	WIRE HARNESS WITH SPLICE POINTS
I 4	38	COWL WIRE	**I 6**	38	FLOOR NO. 2 WIRE

A13 (B) ORANGE

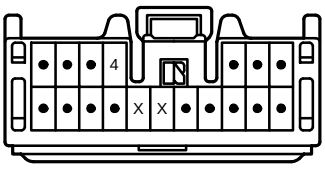

A14 (A) ORANGE

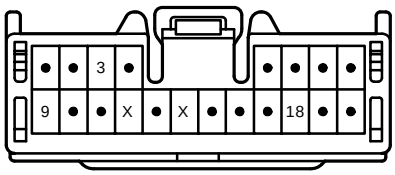

H13 ORANGE

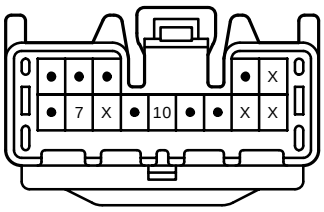

J 1

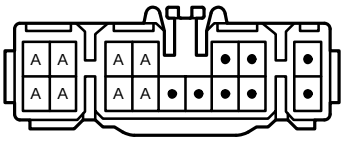

(HINT : SEE PAGE 7)

N 2, N 3 (A)

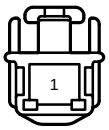

R16, R17



R18 (B) GREEN



R19 (C)



AUTO ANTENNA

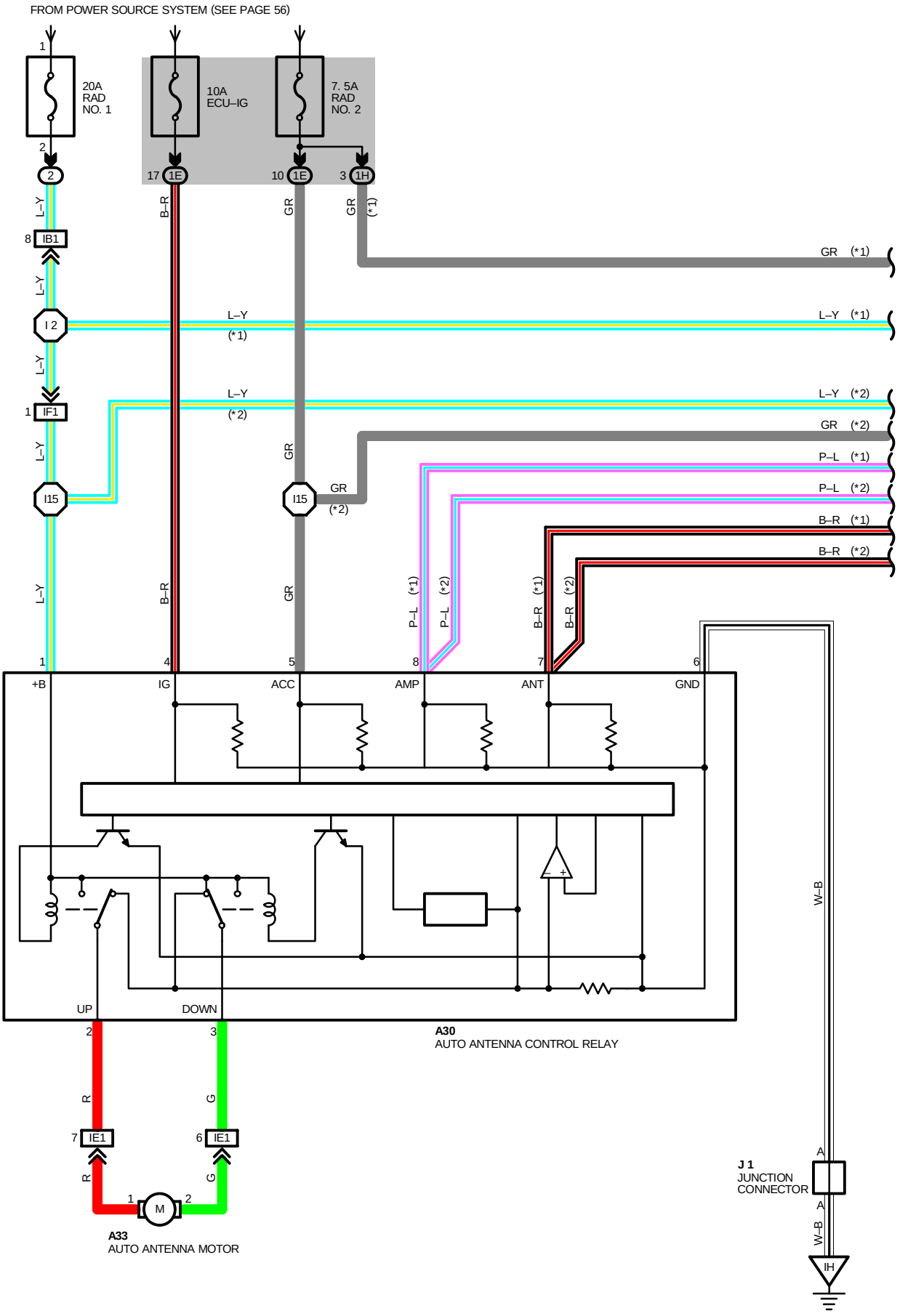

*1 : W/ STEREO POWER AMPLIFIER
*2 : W/O STEREO POWER AMPLIFIER

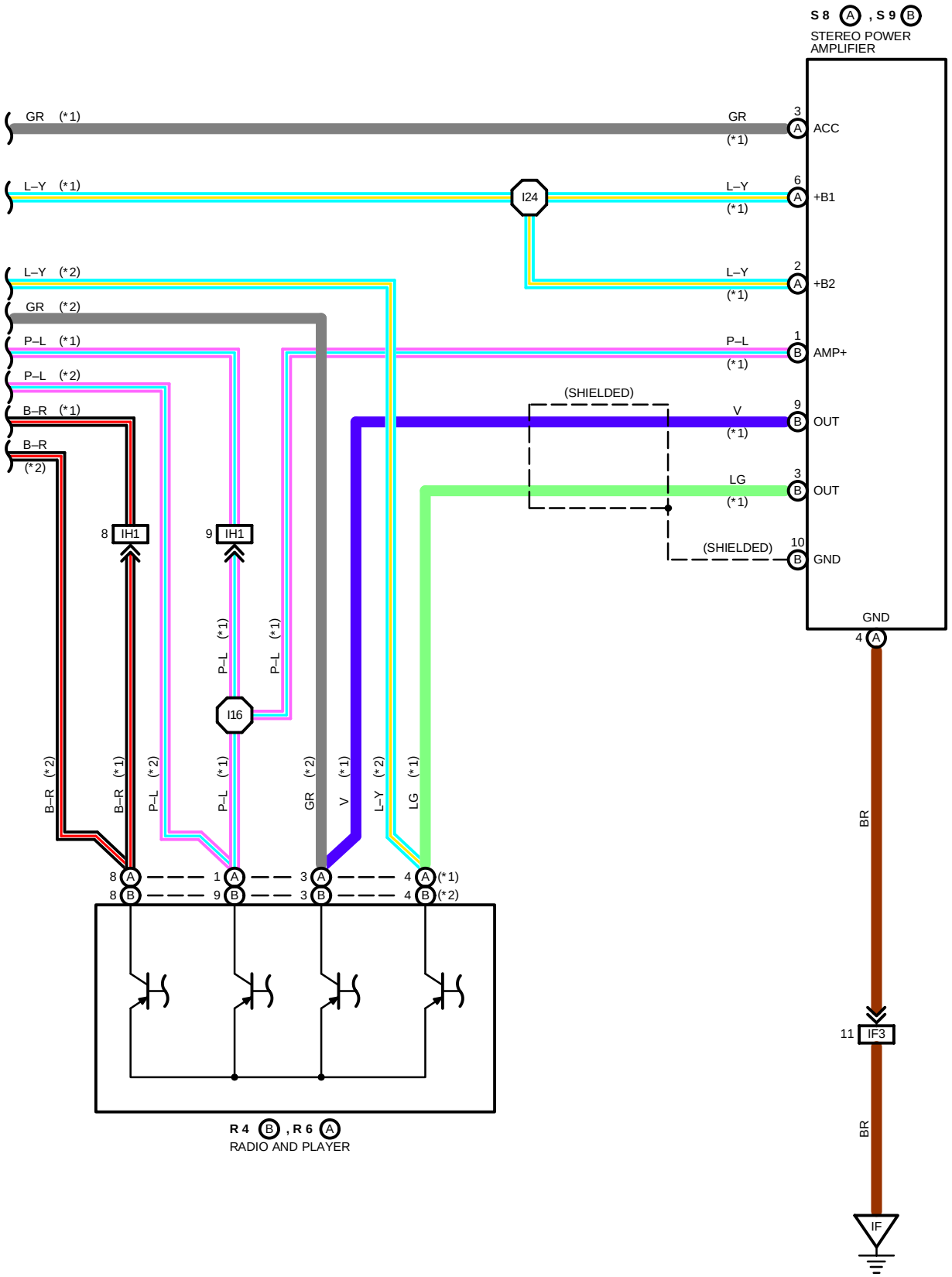

AUTO ANTENNA

SERVICE HINTS

A30 AUTO ANTENNA CONTROL RELAY
1–GROUND : ALWAYS APPROX. **12** VOLTS
4–GROUND : APPROX. **12** VOLTS WITH IGNITION SW AT **ON** POSITION
5–GROUND : APPROX. **12** VOLTS WITH IGNITION SW AT **ACC** OR **ON** POSITION
6–GROUND : ALWAYS CONTINUOUS

○ : PARTS LOCATION

CODE	SEE PAGE	CODE		SEE PAGE	CODE		SEE PAGE
A30	28	**R 4**	B	29	**S 9**	B	29
A33	30	**R 6**	A	29			
J 1	29	**S 8**	A	29			

▭ : RELAY BLOCKS

CODE	SEE PAGE	RELAY BLOCKS (RELAY BLOCK LOCATION)
2	22	R/B NO. 2 (ENGINE COMPARTMENT LEFT)

▭ : JUNCTION BLOCK AND WIRE HARNESS CONNECTOR

CODE	SEE PAGE	JUNCTION BLOCK AND WIRE HARNESS (CONNECTOR LOCATION)
1E	20	INSTRUMENT PANEL WIRE AND J/B NO.1 (LEFT KICK PANEL)
1H	20	COWL WIRE AND J/B NO.1 (LEFT KICK PANEL)

▭ : CONNECTOR JOINING WIRE HARNESS AND WIRE HARNESS

CODE	SEE PAGE	JOINING WIRE HARNESS AND WIRE HARNESS (CONNECTOR LOCATION)
IB1	36	ENGINE ROOM MAIN WIRE AND COWL WIRE (LEFT KICK PANEL)
IE1	36	INSTRUMENT PANEL WIRE AND FLOOR NO. 2 WIRE (LEFT KICK PANEL)
IF1	36	INSTRUMENT PANEL WIRE AND COWL WIRE (INSTRUMENT PANEL REINFORCEMENT LH)
IF3	36	INSTRUMENT PANEL WIRE AND COWL WIRE (RIGHT KICK PANEL)
IH1	38	INSTRUMENT PANEL WIRE AND CONSOLE BOX WIRE (UNDER THE INSTRUMENT PANEL BRACE RH)

▽ : GROUND POINTS

CODE	SEE PAGE	GROUND POINTS LOCATION
IF	36	LEFT KICK PANEL
IH	36	RIGHT KICK PANEL

⬡ : SPLICE POINTS

CODE	SEE PAGE	WIRE HARNESS WITH SPLICE POINTS	CODE	SEE PAGE	WIRE HARNESS WITH SPLICE POINTS
I 2	38	COWL WIRE	**I16**	38	CONSOLE BOX WIRE
I15	38	INSTRUMENT PANEL WIRE	**I24**	38	COWL WIRE

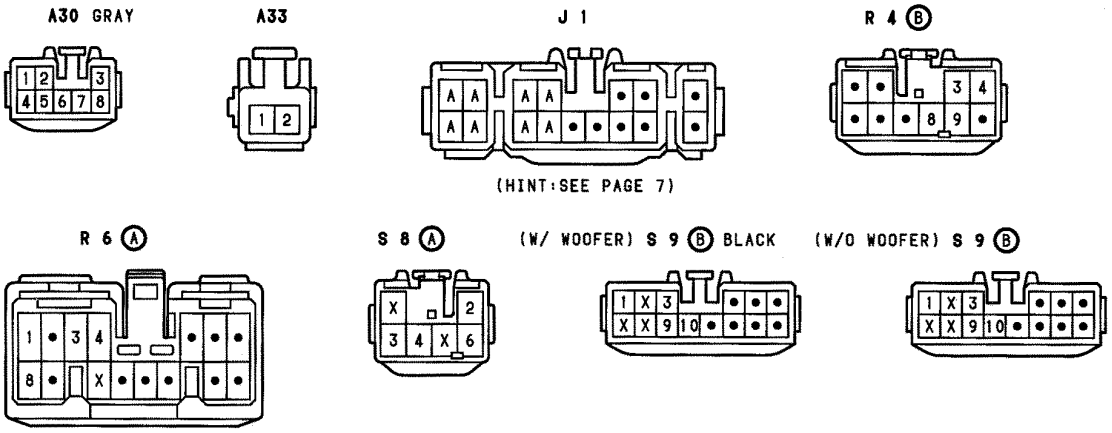

RADIO AND PLAYER (w/ STEREO POWER AMPLIFIER)

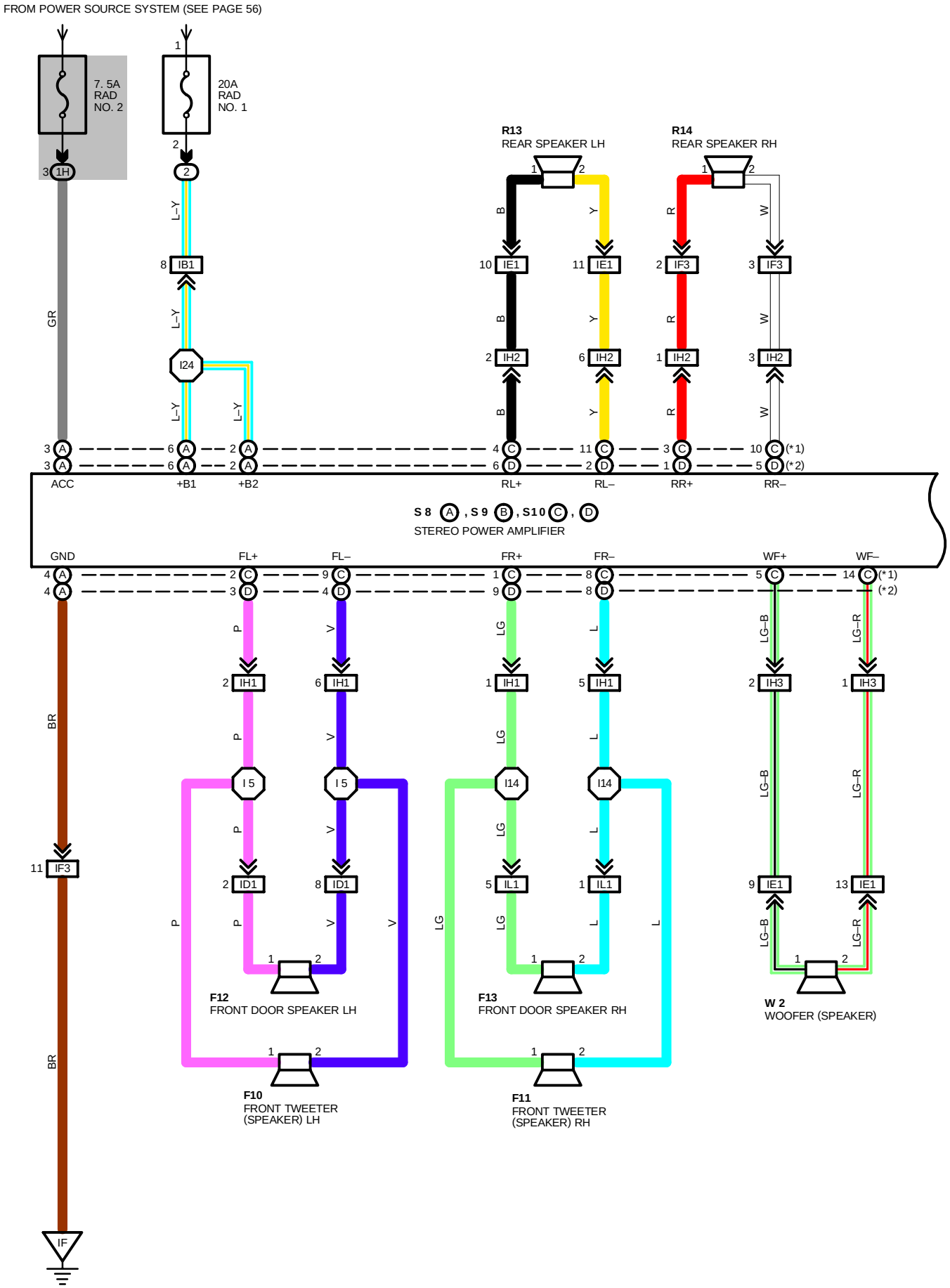

*1 : W/ WOOFER (SPEAKER)
*2 : W/O WOOFER (SPEAKER)

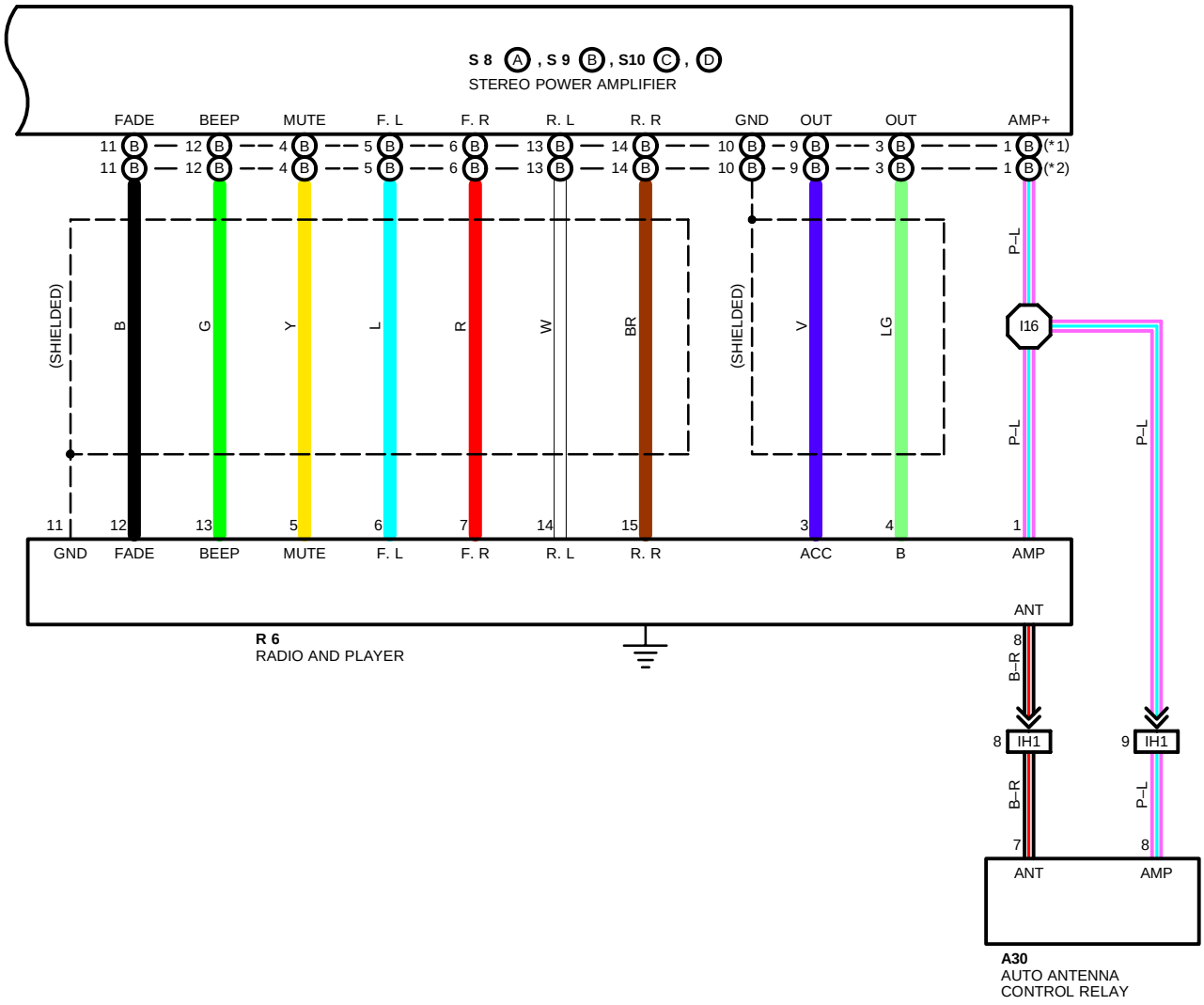

RADIO AND PLAYER (w/ STEREO POWER AMPLIFIER)

SERVICE HINTS

S 8(A) STEREO POWER AMPLIFIER
(A) 6, **(A)**2–GROUND : ALWAYS APPROX. **12** VOLTS
(A) 3–GROUND : APPROX. **12** VOLTS WITH IGNITION SW AT **ON** OR **ACC** POSITION
(A) 4–GROUND : ALWAYS CONTINUOUS

: PARTS LOCATION

CODE	SEE PAGE	CODE		SEE PAGE	CODE		SEE PAGE
A30	28	**R 6**		29	**S10**	C	29
F10	29	**R13**		30		D	29
F11	29	**R14**		30	**W 2**		30
F12	30	**S 8**	A	29			
F13	30	**S 9**	B	29			

: RELAY BLOCKS

CODE	SEE PAGE	RELAY BLOCKS (RELAY BLOCK LOCATION)
2	22	R/B NO. 2 (ENGINE COMPARTMENT LEFT)

: JUNCTION BLOCK AND WIRE HARNESS CONNECTOR

CODE	SEE PAGE	JUNCTION BLOCK AND WIRE HARNESS (CONNECTOR LOCATION)
1H	20	COWL WIRE AND J/B NO. 1 (LEFT KICK PANEL)

: CONNECTOR JOINING WIRE HARNESS AND WIRE HARNESS

CODE	SEE PAGE	JOINING WIRE HARNESS AND WIRE HARNESS (CONNECTOR LOCATION)
IB1	36	ENGINE ROOM MAIN WIRE AND COWL WIRE (LEFT KICK PANEL)
ID1	36	FRONT DOOR LH WIRE AND INSTRUMENT PANEL WIRE (LEFT KICK PANEL)
IE1	36	INSTRUMENT PANEL WIRE AND FLOOR NO. 2 WIRE (LEFT KICK PANEL)
IF3	36	INSTRUMENT PANEL WIRE AND COWL WIRE (RIGHT KICK PANEL)
IH1	38	INSTRUMENT PANEL WIRE AND CONSOLE BOX WIRE (UNDER THE INSTRUMENT PANEL BRACE RH)
IH2		
IH3		
IL1	38	FRONT DOOR RH WIRE AND INSTRUMENT PANEL WIRE (RIGHT KICK PANEL)

: GROUND POINTS

CODE	SEE PAGE	GROUND POINTS LOCATION
IF	36	LEFT KICK PANEL

: SPLICE POINTS

CODE	SEE PAGE	WIRE HARNESS WITH SPLICE POINTS	CODE	SEE PAGE	WIRE HARNESS WITH SPLICE POINTS
I 5	38	INSTRUMENT PANEL WIRE	**I16**	38	CONSOLE BOX WIRE
I14			**I24**	38	COWL WIRE

*1 : W/ WOOFER (SPEAKER)
*2 : W/O WOOFER (SPEAKER)

A30 GRAY



F10



F11



F12



F13



R 6

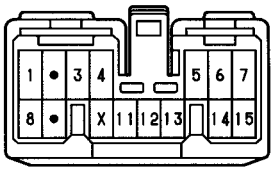

R13



R14



S 8 (A)



(*1) S 9 (B) BLACK

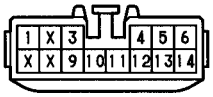

(*2) S 9 (B)

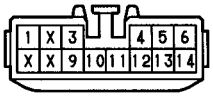

(*1) S10 (C) BLACK

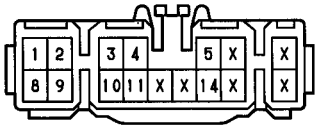

(*2) S10 (D)

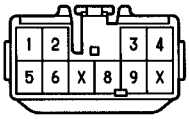

W 2



RADIO AND PLAYER (w/o STEREO POWER AMPLIFIER)

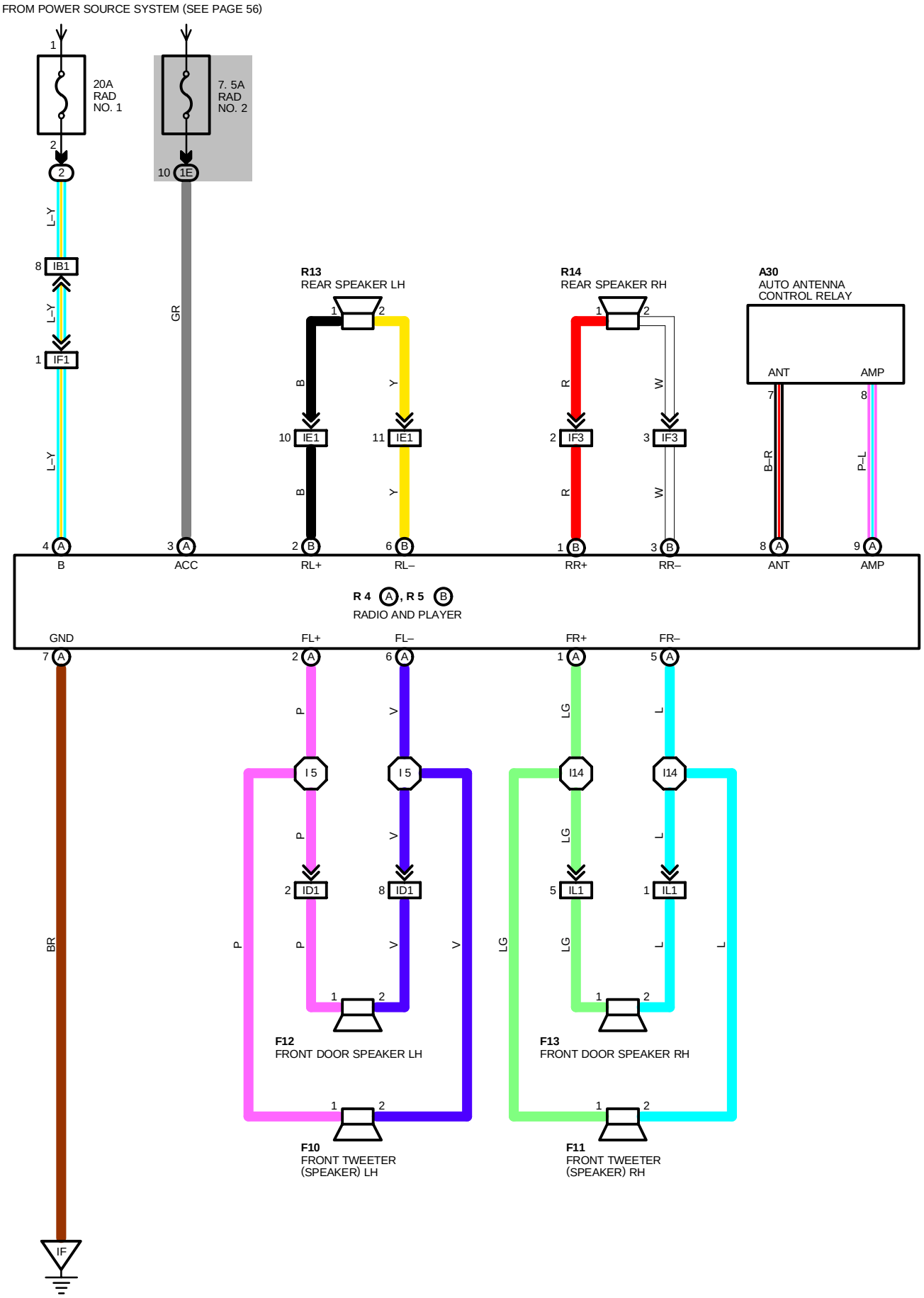

SERVICE HINTS

R 4(A) RADIO AND PLAYER
(A) 4–GROUND : ALWAYS APPROX. **12** VOLTS
(A) 3–GROUND : APPROX. **12** VOLTS WITH IGNITION SW AT **ON** OR **ACC** POSITION
(A) 7–GROUND : ALWAYS CONTINUOUS

: PARTS LOCATION

CODE	SEE PAGE	CODE	SEE PAGE	CODE	SEE PAGE
A30	28	**F12**	30	**R 5** B	29
F10	29	**F13**	30	**R13**	30
F11	29	**R 4** A	29	**R14**	30

: RELAY BLOCKS

CODE	SEE PAGE	RELAY BLOCKS (RELAY BLOCK LOCATION)
2	22	R/B NO. 2 (ENGINE COMPARTMENT LEFT)

: JUNCTION BLOCK AND WIRE HARNESS CONNECTOR

CODE	SEE PAGE	JUNCTION BLOCK AND WIRE HARNESS (CONNECTOR LOCATION)
1E	20	INSTRUMENT PANEL WIRE AND J/B NO. 1 (LEFT KICK PANEL)

: CONNECTOR JOINING WIRE HARNESS AND WIRE HARNESS

CODE	SEE PAGE	JOINING WIRE HARNESS AND WIRE HARNESS (CONNECTOR LOCATION)
IB1	36	ENGINE ROOM MAIN WIRE AND COWL WIRE (LEFT KICK PANEL)
ID1	36	FRONT DOOR LH WIRE AND INSTRUMENT PANEL WIRE (LEFT KICK PANEL)
IE1	36	INSTRUMENT PANEL WIRE AND FLOOR NO. 2 WIRE (LEFT KICK PANEL)
IF1	36	INSTRUMENT PANEL WIRE AND COWL WIRE (INSTRUMENT PANEL REINFORCEMENT LH)
IF3	36	INSTRUMENT PANEL WIRE AND COWL WIRE (RIGHT KICK PANEL)
IL1	38	FRONT DOOR RH WIRE AND INSTRUMENT PANEL WIRE (RIGHT KICK PANEL)

: GROUND POINTS

CODE	SEE PAGE	GROUND POINTS LOCATION
IF	36	LEFT KICK PANEL

: SPLICE POINTS

CODE	SEE PAGE	WIRE HARNESS WITH SPLICE POINTS	CODE	SEE PAGE	WIRE HARNESS WITH SPLICE POINTS
I 5	38	INSTRUMENT PANEL WIRE	**I14**	38	INSTRUMENT PANEL WIRE

A30 GRAY



F10



F11



F12



F13



R 4 (A)

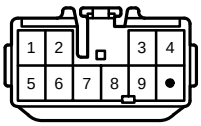

R 5 (B)

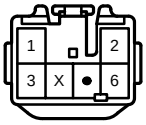

R13



R14



COMBINATION METER

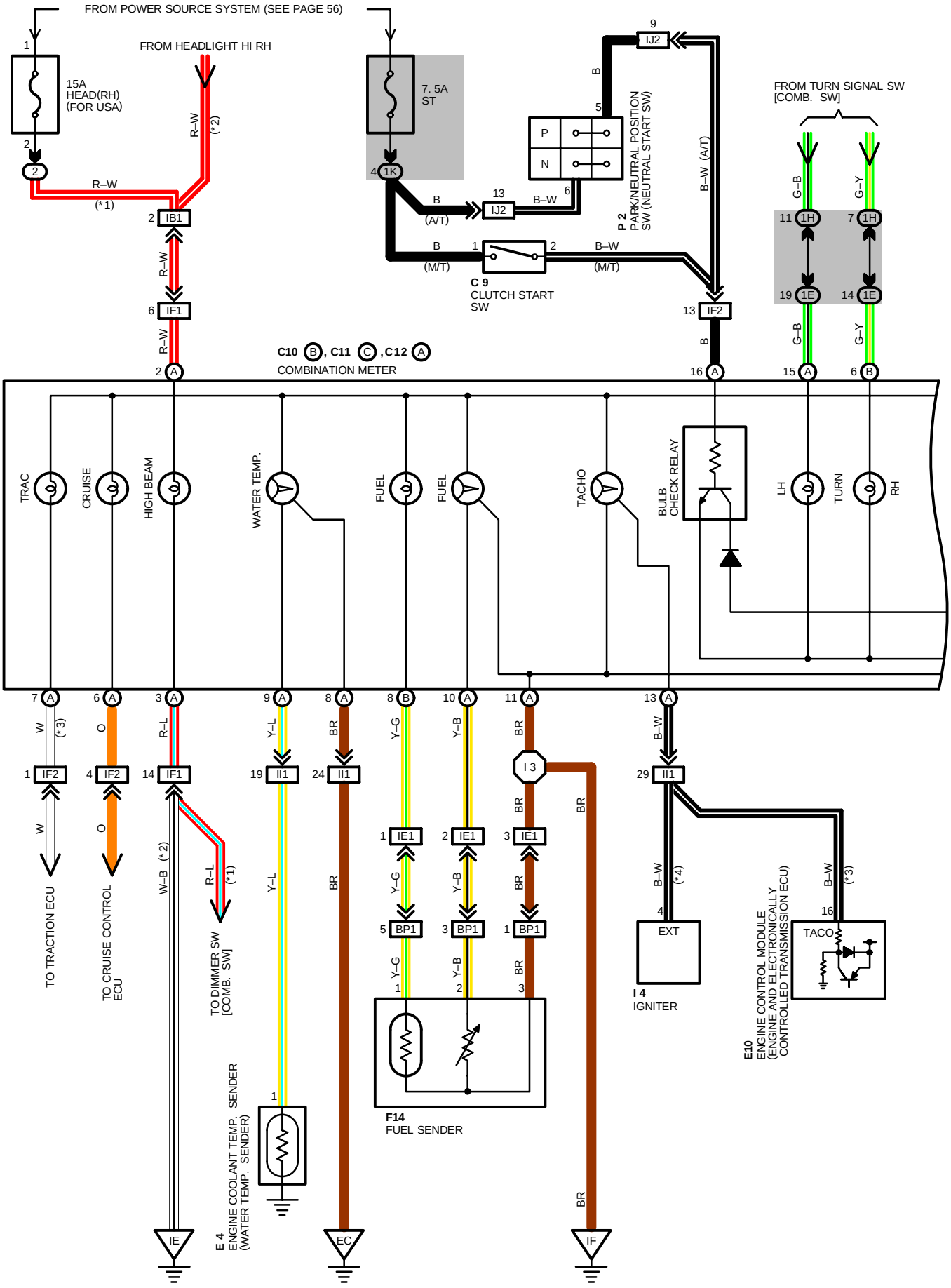

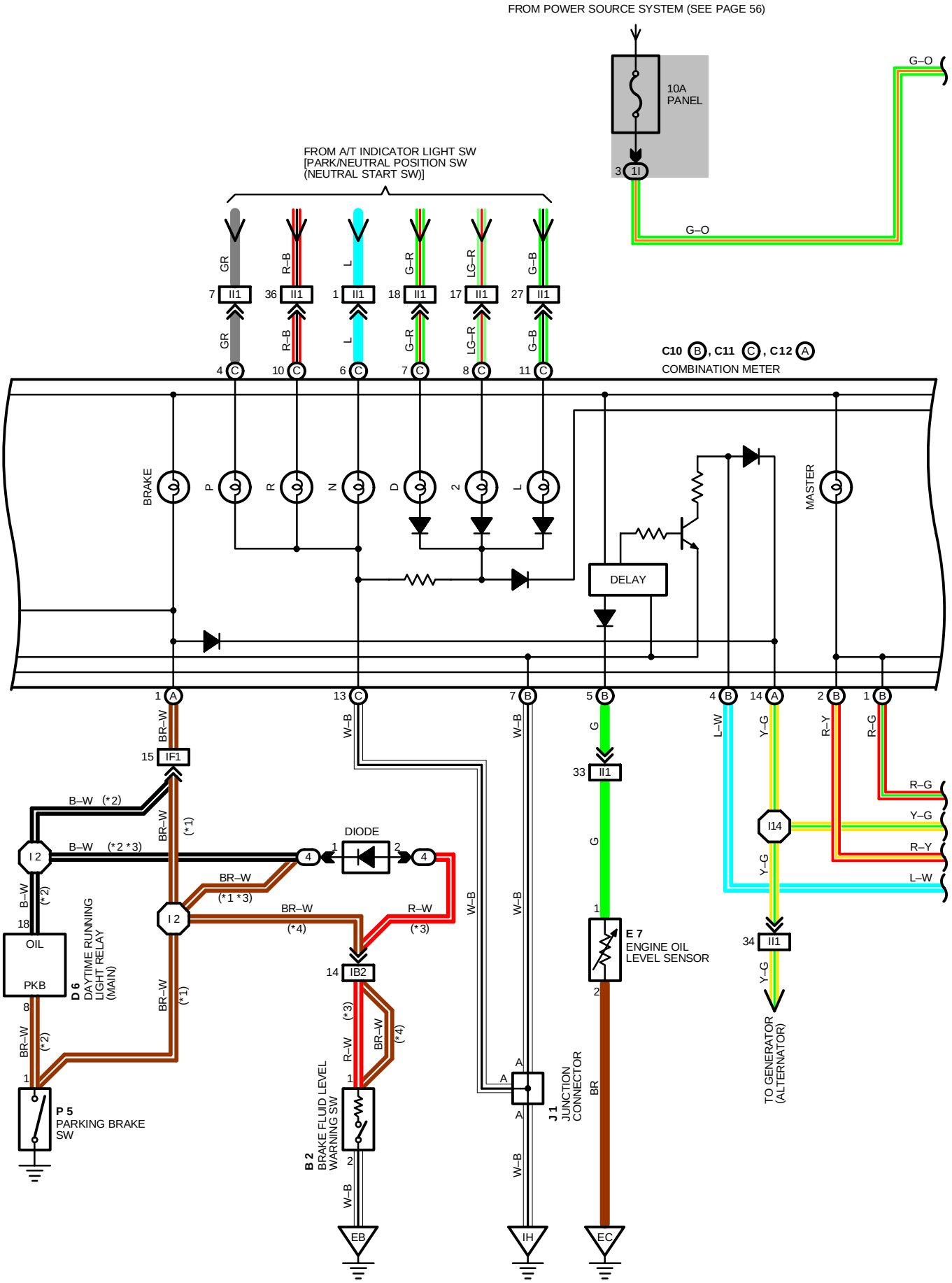
FROM POWER SOURCE SYSTEM (SEE PAGE 56)
10A PANEL
G–O
FROM A/T INDICATOR LIGHT SW [PARK/NEUTRAL POSITION SW (NEUTRAL START SW)]
C10 B, C11 C, C12 A
COMBINATION METER
BRAKE
P
R
N
D
2
L
MASTER
DELAY
DIODE
OIL
PKB
D 6 DAYTIME RUNNING LIGHT RELAY (MAIN)
P 5 PARKING BRAKE SW
B 2 BRAKE FLUID LEVEL WARNING SW
E 7 ENGINE OIL LEVEL SENSOR
J 1 JUNCTION CONNECTOR
TO GENERATOR (ALTERNATOR)
IF1
I 2
IB2
I14
II1
EB
IH
EC

COMBINATION METER

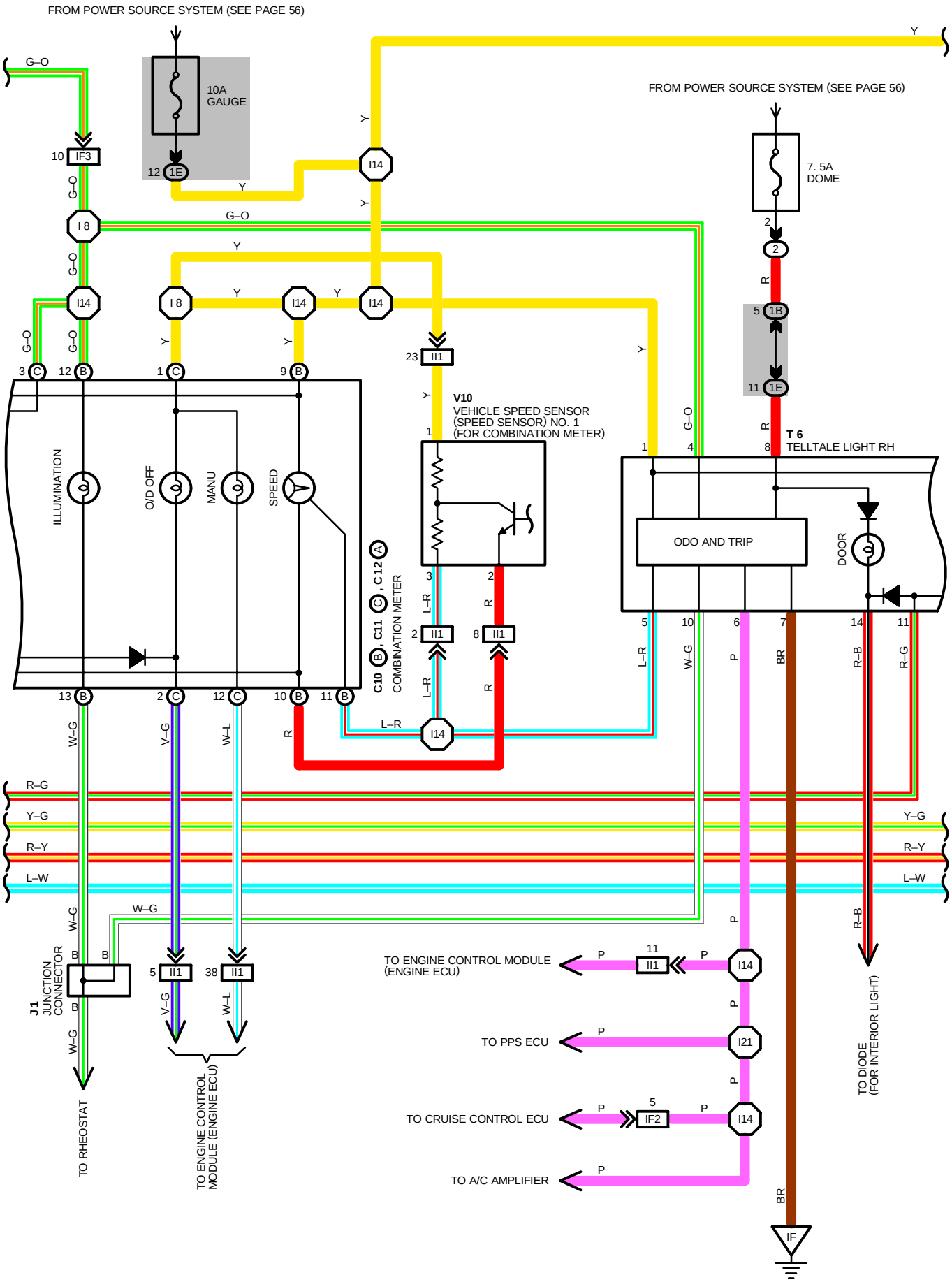

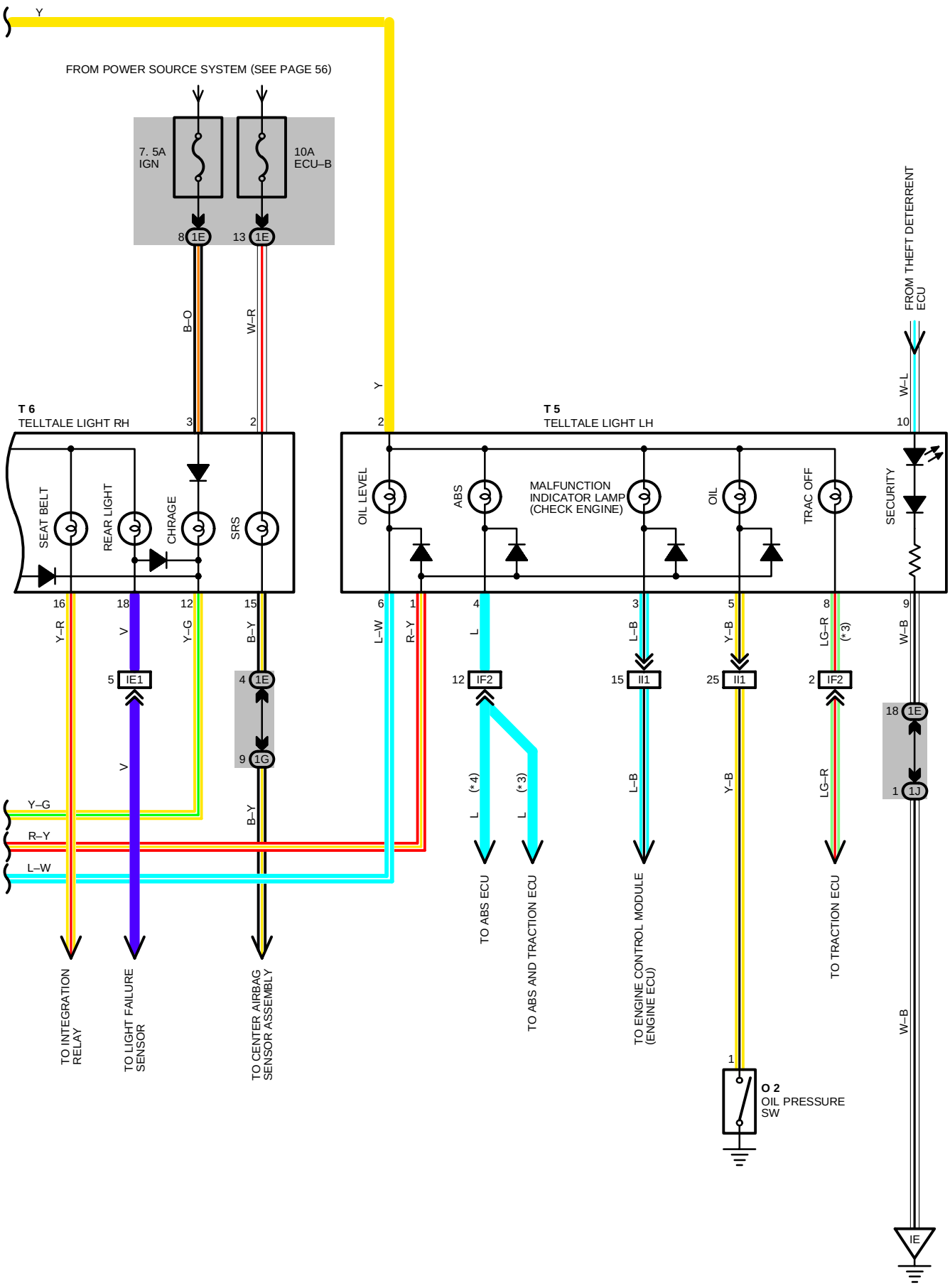
Y
FROM POWER SOURCE SYSTEM (SEE PAGE 56)
7. 5A IGN
10A ECU–B
8 1E
13 1E
B–O
W–R
T 6
TELLTALE LIGHT RH
3
2
SEAT BELT
REAR LIGHT
CHRAGE
SRS
16
18
12
15
Y–R
V
Y–G
B–Y
5 IE1
4 1E
9 1G
V
B–Y
Y–G
R–Y
L–W
TO INTEGRATION RELAY
TO LIGHT FAILURE SENSOR
TO CENTER AIRBAG SENSOR ASSEMBLY
Y
2
T 5
TELLTALE LIGHT LH
OIL LEVEL
ABS
MALFUNCTION INDICATOR LAMP (CHECK ENGINE)
OIL
TRAC OFF
SECURITY
6
1
4
3
5
8
9
L–W
R–Y
L
L–B
Y–B
LG–R
(*3)
W–B
12 IF2
15 II1
25 II1
2 IF2
L (*4)
L (*3)
L–B
Y–B
LG–R
TO ABS ECU
TO ABS AND TRACTION ECU
TO ENGINE CONTROL MODULE (ENGINE ECU)
TO TRACTION ECU
FROM THEFT DETERRENT ECU
W–L
10
18 1E
1 1J
W–B
1
O 2
OIL PRESSURE SW
IE

COMBINATION METER

SERVICE HINTS

B 2 BRAKE FLUID LEVEL WARNING SW
1–2 : CLOSED WITH FLOAT DOWN

P 5 PARKING BRAKE SW
1–GROUND : CLOSED WITH PARKING BRAKE LEVER PULLED UP

O 2 OIL PRESSURE SW
1–GROUND : CLOSED WITH OIL PRESSURE ABOVE APPROX. **20** KPA (**2.8** PSI, **0.2** KG/CM^2)

E 4 ENGINE COOLANT TEMP. SENDER (WATER TEMP. SENDER)
1–GROUND : APPROX. **160**–**240** (**50**˚C, **122**˚F)
: APPROX. **17.1**–**20.4** (**120**˚C, **288**˚F)

E 7 ENGINE OIL LEVEL SENSOR
1–2 : CLOSED WITH FLOAT UP AND ENGINE OIL TEMP. AT BELOW APPROX. **55**˚C (**131**˚F)
OPEN WITH FLOAT DOWN AND ENGINE OIL TEMP. AT BELOW APPROX. **60**˚C (**140**˚F)

F14 FUEL SENDER
1–2 : APPROX. **3** AT FUEL FULL
: APPROX. **110** AT FUEL EMPTY

C10(B), C12(A) COMBINATION METER
(B) 9–GROUND : APPROX. **12** VOLTS WITH IGNITION SW AT **ON** POSITION
(A)16–GROUND : APPROX. **12** VOLTS WITH IGNITION SW AT **ST** POSITION AND SHIFT LEVER AT **P** OR **N** POSITION (A/T)
12 VOLTS WITH IGNITION SW AT **ST** POSITION AND CLUTCH PEDAL DEPRESSED (M/T)
(A) 8–GROUND : ALWAYS CONTINUOUS
(A)11–GROUND : ALWAYS CONTINUOUS
(A) 2–GROUND : ALWAYS APPROX. **12** VOLTS

○ : PARTS LOCATION

CODE		SEE PAGE	CODE	SEE PAGE	CODE	SEE PAGE
B 2		24 (2JZ–GTE)	**E 4**	26 (2JZ–GE)	**O 2**	27 (2JZ–GE)
		26 (2JZ–GE)	**E 7**	24 (2JZ–GTE)	**P 2**	25 (2JZ–GTE)
C 9		28		26 (2JZ–GE)		27 (2JZ–GE)
C10	B	28	**E10**	29	**P 5**	29
C11	C	28	**F14**	30	**T 5**	29
C12	A	28	**I 4**	27	**T 6**	29
D 6		28	**J 1**	29	**V10**	25 (2JZ–GTE)
E 4		24 (2JZ–GTE)	**O 2**	25 (2JZ–GTE)		27 (2JZ–GE)

▭ : RELAY BLOCKS

CODE	SEE PAGE	RELAY BLOCKS (RELAY BLOCK LOCATION)
2	22	R/B NO. 2 (ENGINE COMPARTMENT LEFT)
4	23	R/B NO. 4 (LEFT KICK PANEL)

▭ : JUNCTION BLOCK AND WIRE HARNESS CONNECTOR

CODE	SEE PAGE	JUNCTION BLOCK AND WIRE HARNESS (CONNECTOR LOCATION)
1B	20	ENGINE ROOM MAIN WIRE AND J/B NO. 1 (LEFT KICK PANEL)
1E	20	INSTRUMENT PANEL WIRE AND J/B NO. 1 (LEFT KICK PANEL)
1G	20	COWL WIRE AND J/B NO. 1 (LEFT KICK PANEL)
1H		
1I		
1J		
1K		

▭ : CONNECTOR JOINING WIRE HARNESS AND WIRE HARNESS

CODE	SEE PAGE	JOINING WIRE HARNESS AND WIRE HARNESS (CONNECTOR LOCATION)
IB1	36	ENGINE ROOM MAIN WIRE AND COWL WIRE (LEFT KICK PANEL)
IB2		
IE1	36	INSTRUMENT PANEL WIRE AND FLOOR NO. 2 WIRE (LEFT KICK PANEL)
IF1	36	INSTRUMENT PANEL WIRE AND COWL WIRE (INSTRUMENT PANEL REINFORCEMENT LH)
IF2		
IF3	36	INSTRUMENT PANEL WIRE AND COWL WIRE (RIGHT KICK PANEL)
II1	38	ENGINE WIRE AND INSTRUMENT PANEL WIRE (RIGHT KICK PANEL)
IJ2	38	ENGINE WIRE AND COWL WIRE (RIGHT KICK PANEL)
BP1	40	FUEL GAUGE WIRE AND FLOOR NO. 2 WIRE (LUGGAGE ROOM FRONT LH)

: GROUND POINTS

CODE	SEE PAGE	GROUND POINTS LOCATION
EB	32 (2JZ–GTE)	FRONT SIDE OF LEFT FENDER
	34 (2JZ–GE)	
EC	32 (2JZ–GTE)	FRONT SIDE OF INTAKE MANIFOLD
	34 (2JZ–GE)	
IE	36	LEFT KICK PANEL
IF		
IH	36	RIGHT KICK PANEL

: SPLICE POINTS

CODE	SEE PAGE	WIRE HARNESS WITH SPLICE POINTS	CODE	SEE PAGE	WIRE HARNESS WITH SPLICE POINTS
I 2	38	COWL WIRE	**I14**	38	INSTRUMENT PANEL WIRE
I 3	38	INSTRUMENT PANEL WIRE	**I21**		
I 8					

B 2 GRAY



C 9

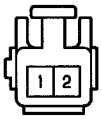

C10 (B) BLUE

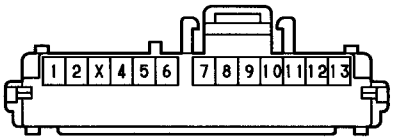

C11 (C) BROWN

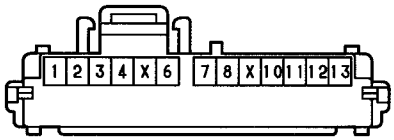

(2JZ-GTE) C12 (A)

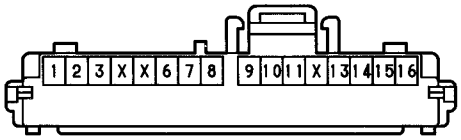

(2JZ-GE) C12 (A)

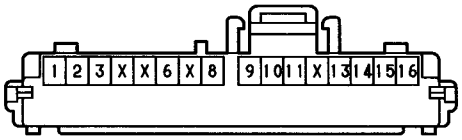

D 6 GRAY

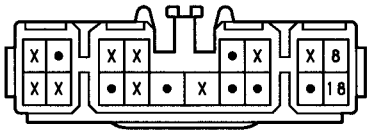

E 4 GRAY



E 7 GRAY



E10 DARK GRAY

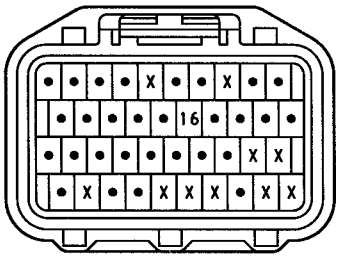

F14 DARK GRAY



I 4 BLACK

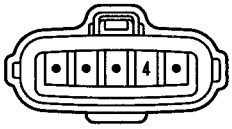

J 1

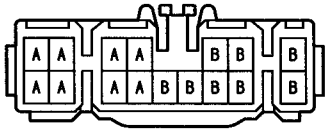

(HINT:SEE PAGE 7)

O 2 BLACK



P 2 GRAY

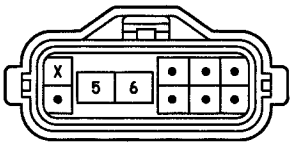

P 5



(2JZ-GTE) T 5

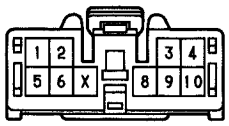

(2JZ-GE) T 5

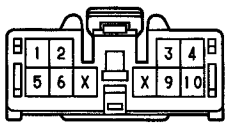

T 6

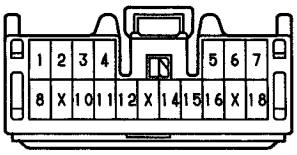

V10 BLACK



SYSTEM OUTLINE

1. HEATER BLOWER OPERATION

MANNAL BLOWER OPERATION

WHEN THE BLOWER CONTROL SW IS SET TO ANY BLOWER SPEEDS, THE A/C AMPLIFIER OPERATES AND THE CURRENT TO DRIVE THE BLOWER MOTOR FLOWS FROM **TERMINAL BLW** OF THE A/C AMPLIFIER TO **TERMINAL SI** OF THE BLOWER MOTOR CONTROL RELAY. THE CURRENT ACTIVATES THE RELAY AND THE VOLTAGE APPLIED TO **TERMINAL +B** OF THE BLOWER MOTOR CONTROL RELAY IS OUTPUT AT **TERMINAL M+** AS THE VOLTAGE FOR THE SELECTED BLOWER SPEED. THE CURRENT THEN FLOWS FROM **TERMINAL M+** OF THE BLOWER MOTOR CONTROL RELAY TO **TERMINAL 2** → **TERMINAL 1** → **TERMINAL M–** OF BLOWER MOTOR CONTROL RELAY → **TERMINAL GND** → **GROUND**, AND THE BLOWER MOTOR OPERATES AT THE BLOWER SPEED SELECTED.

AUTO FUNCTION

WHEN THE AUTO SW IS TURNED ON, THE A/C AMPLIFIER CALCULATES THE REQUIRED VENT TEMPERATURE BASED ON THE SET TEMPERATURE AND INPUT FROM EACH SENSOR. THEN **TERMINAL BLW** OF THE A/C AMPLIFIER INPUTS CURRENT TO **TERMINAL SI** OF THE BLOWER MOTOR CONTROL RELAY IN CONFORMITY WITH THE REQUIRED VENT OUTPUT. THIS CURRENT ACTIVATES THE BLOWER MOTOR CONTROL RELAY SO THAT CURRENT FLOWS FROM **TERMINAL M+** OF THE BLOWER MOTOR CONTROL RELAY → **TERMINAL 2** OF BLOWER MOTOR → **TERMINAL 1** → **TERMINAL M–** OF BLOWER MOTOR CONTROL RELAY → **TERMINAL GND** → **GROUND**, ACTIVATING THE BLOWER MOTOR. THE BLOWER MOTOR THEN OPERATES AT DIFFERENT STEPS IN CONFORMITY WITH VARIABLE CURRENT FLOW OUTPUT FROM **TERMINAL BLW** OF THE A/C AMPLIFIER TO **TERMINAL SI** OF THE BLOWER MOTOR CONTROL RELAY.

2. OPERATION OF AIR INLET CONTROL SERVO MOTOR

(SWITCHING FROM FRESH TO RECIRC)

WITH IGNITION SW TURNED ON, THE CURRENT FLOWS FROM **HTR** FUSE TO **TERMINAL 2** OF AIR INLET CONTROL SERVO MOTOR → **TERMINAL 5** → **TERMINAL AIR** OF A/C AMPLIFIER → **TERMINAL GND** → **GROUND**, THE MOTOR ROTATES AND THE DAMPER STOPS AT **RECIRC** POSITION.

(SWITCH(NG FROM RECIRC TO FRESH)

WITH IGNITION SW TURNED ON, THE CURRENT FLOWS FROM **HTR** FUSE TO **TERMINAL 2** OF AIR INLET CONTROL SERVO MOTOR → **TERMINAL 3** → **TERMINAL AIF** OF A/C AMPLIFIER → **TERMINAL GND** → **GROUND**, THE MOTOR ROTATES AND THE DAMPER STOPS AT **FRESH** POSITION.

3. OPERATION OF AIR VENT MODE CONTROL SERVO MOTOR

WITH IGNITION SW TURNED ON, THE CURRENT FLOWS FROM **HTR** FUSE TO **TERMINAL IG** OF A/C AMPLIFIER

(SWITCHING FROM DEF TO FACE)

THE CURRENT FROM **TERMINAL AOF** OF A/C AMPLIFIER → **TERMINAL 1** OF AIR VENT MODE CONTROL SERVO MOTOR → **TERMINAL 2** → **TERMINAL AOD** OF A/C AMPLIFIER → **TERMINAL GND** → **GROUND**. THE MOTOR ROTATES AND THE DAMPER MOVES TO FACE SIDE. WHEN THE DAMPER OPERATES WITH THE A/C SW AT **FACE** POSITION, THE DAMPER POSITION SIGNAL IS INPUT FROM **TERMINAL 3** OF THE SERVO MOTOR TO THE **TERMINAL TPO** OF THE A/C AMPLIFIER. AS A RESULT, CURRENT TO THE SERVO MOTOR CIRCUIT IS CUT OFF BY THE AMPLIFIER, SO THE DAMPER STOPS AT THAT POSITION.

(SWITCHING FROM FACE TO DEF)

THE CURRENT FLOWS FROM **TERMINAL AOD** OF A/C AMPLIFIER → **TERMINAL 2** OF AIR VENT MODE CONTROL SERVO MOTOR → **TERMINAL 1** → **TERMINAL AOF** OF A/C AMPLIFIER → **TERMINAL GND** → **GROUND**, THE MOTOR ROTATES AND THE DAMPER STOPS AT THAT POSITION.

4. OPERATION OF AIR MIX CONTROL SERVO MOTOR

WHEN THE TEMPERATURE SW IS TURNED TO THE “COOL” SIDE, THE CURRENT FLOWS FROM **TERMINAL AMC** OF A/C AMPLIFIER → **TERMINAL 1** OF AIR MIX CONTROL SERVO MOTOR → MOTOR → **TERMINAL 2** → **TERMINAL AMH** OF A/C AMPLIFIER → **TERMINAL GND** → **GROUND** AND THE MOTOR ROTATES. THE DAMPER OPENING ANGLE AT THIS TIME IS INPUT FROM **TERMINAL 3** OF SERVO MOTOR TO **TERMINAL TP** OF A/C CONTROL ASSEMBLY, THIS IS USED TO DETERMINE THE DAMPER STOP POSITION AND MAINTAIN THE SET TEMPERATURE.

WHEN THE TEMPERATURE CONTROL SW IS TURNED TO THE “WARM” SIDE, THE CURRENT FLOWS FROM **TERMINAL AMH** OF A/C AMPLIFIER → **TERMINAL 2** OF AIR MIX CONTROL SERVO MOTOR → MOTOR → **TERMINAL 1** → **TERMINAL AM1** OF A/C AMPLIFIER, ROTATING THE MOTOR IN REVERSE AND SWITCHING THE DAMPER FROM COOL TO WARM SIDE.

5. AIR CONDITIONING OPERATION

THE A/C AMPLIFIER RECEIVES VARIOUS SIGNALS, I.E., THE ENGINE RPM FROM THE IGNITER, OUTLET TEMPERATURE SIGNAL FROM THE A/C THERMISTOR, COOLANT TEMPERATURE FROM THE ENGINE COOLANT TEMP. SENSOR (EFI WATER TEMP. SENSOR) AND THE LOCK SIGNAL FROM THE A/C COMPRESSOR, ETC.

WHEN THE ENGINE IS STARTED AND THE A/C SW (HEATER CONTROL SW) IS ON, A SIGNAL IS INPUT TO THE A/C AMPLIFIER. AS A RESULT, THE GROUND CIRCUIT IN A/C AMPLIFIER IS CLOSED AND CURRENT FLOWS FROM **HTR** FUSE TO **TERMINAL 1** OF A/C MAGNETIC CLUTCH RELAY → **TERMINAL 2** → **TERMINAL ACMG** OF ENGINE CONTROL MODULE (ENGINE ECU) → **TERMINAL A/C** → **TERMINAL MGC** OF A/C AMPLIFIER → **TERMINAL GND** → **GROUND**, TURNING THE RELAY ON, SO THAT THE A/C MAGNETIC CLUTCH IS ON AND THE A/C AMPLIFIER OPERATES.

AT THE SAME TIME, THE ENGINE CONTROL MODULE (ENGINE ECU) DETECTS THE MAGNETIC CLUTCH IS ON AND THE A/C AMPLIFIER IS OPERATING AND OPENS DIRECTION TO AVOID LOWERING THE ENGINE RPM DURING A/C OPERATING.

WHEN ANY OF THE FOLLOWING SIGNALS ARE INPUT TO THE A/C AMPLIFIER, THE A/C AMPLIFIER OPERATES TO TURN OFF THE AIR CONDITIONING.

* ENGINE RPM SIGNAL IS HIGH.
* COOLANT TEMP. SIGNAL IS HIGH.
* A SIGNAL THAT THE TEMPERATURE AT THE AIR OUTLET IS LOW.
* A SIGNAL THAT THERE IS A LARGE DIFFERENCE BETWEEN ENGINE SPEED AND COMPRESSOR SPEED.
* A SIGNAL THAT THE REFRIGERANT PRESSURE IS ABNORMALLY HIGH OR LOW.

RADIATOR FAN AND AUTOMATIC AIR CONDITIONING

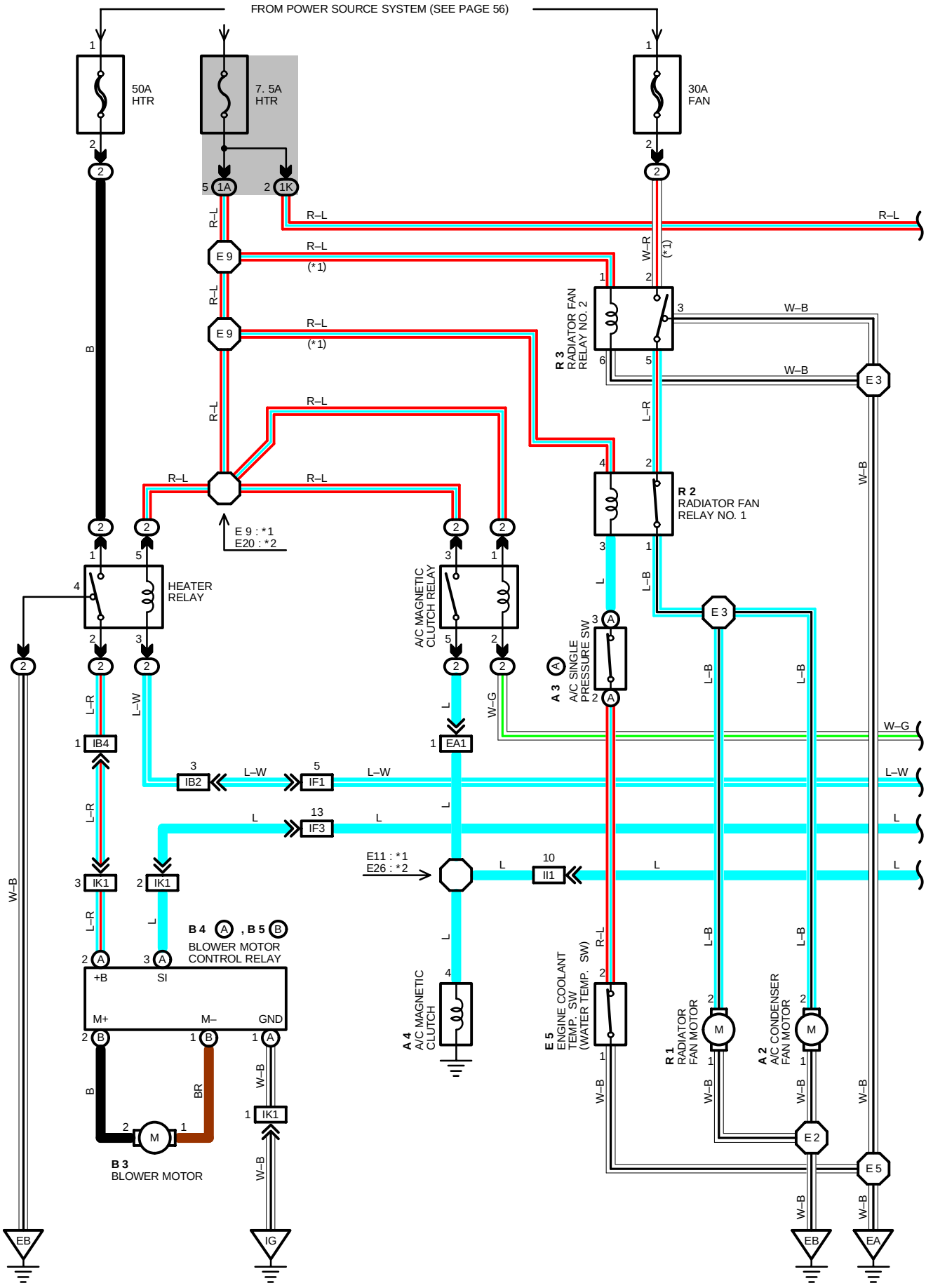

*1 : 2JZ–GTE
*2 : 2JZ–GE

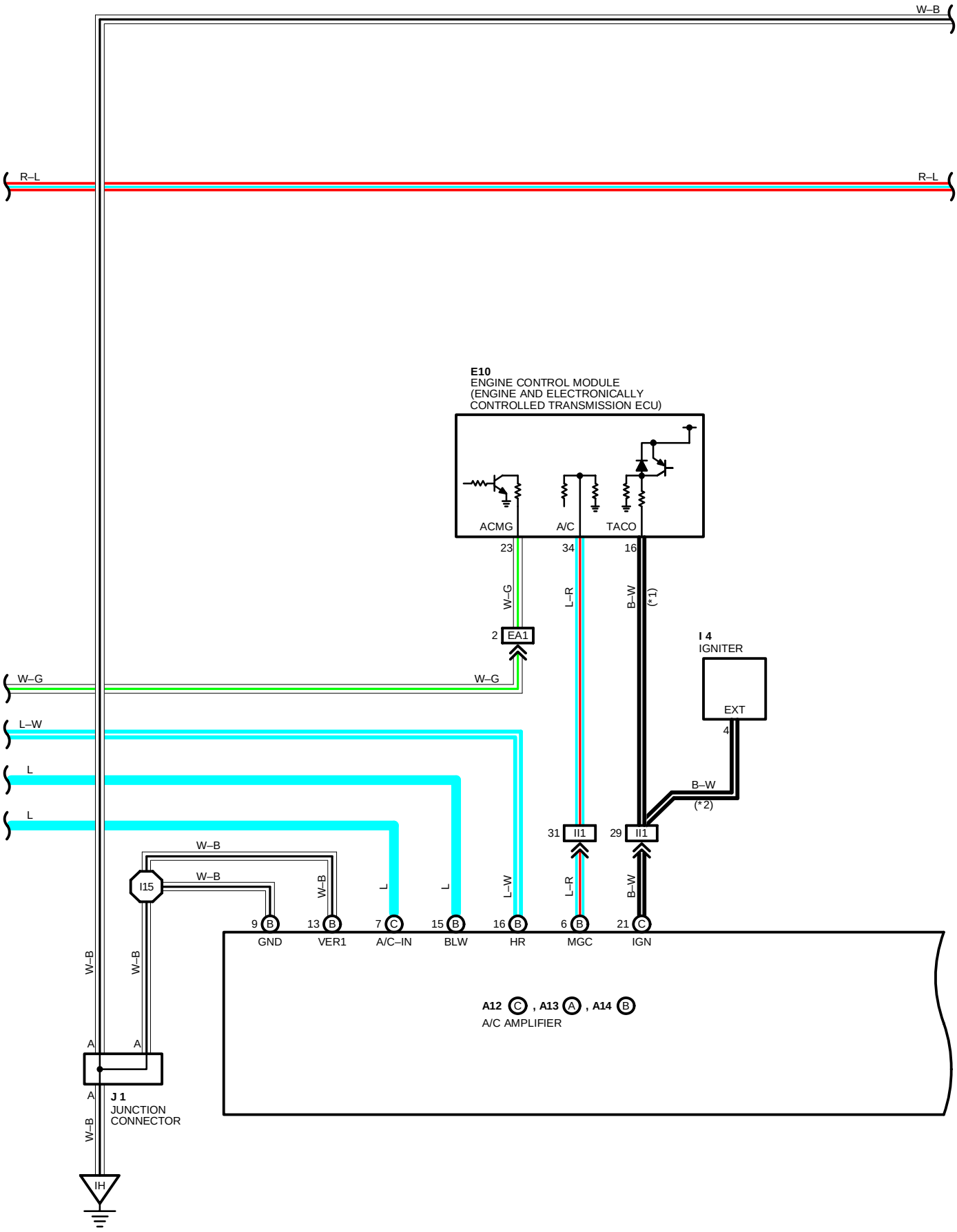

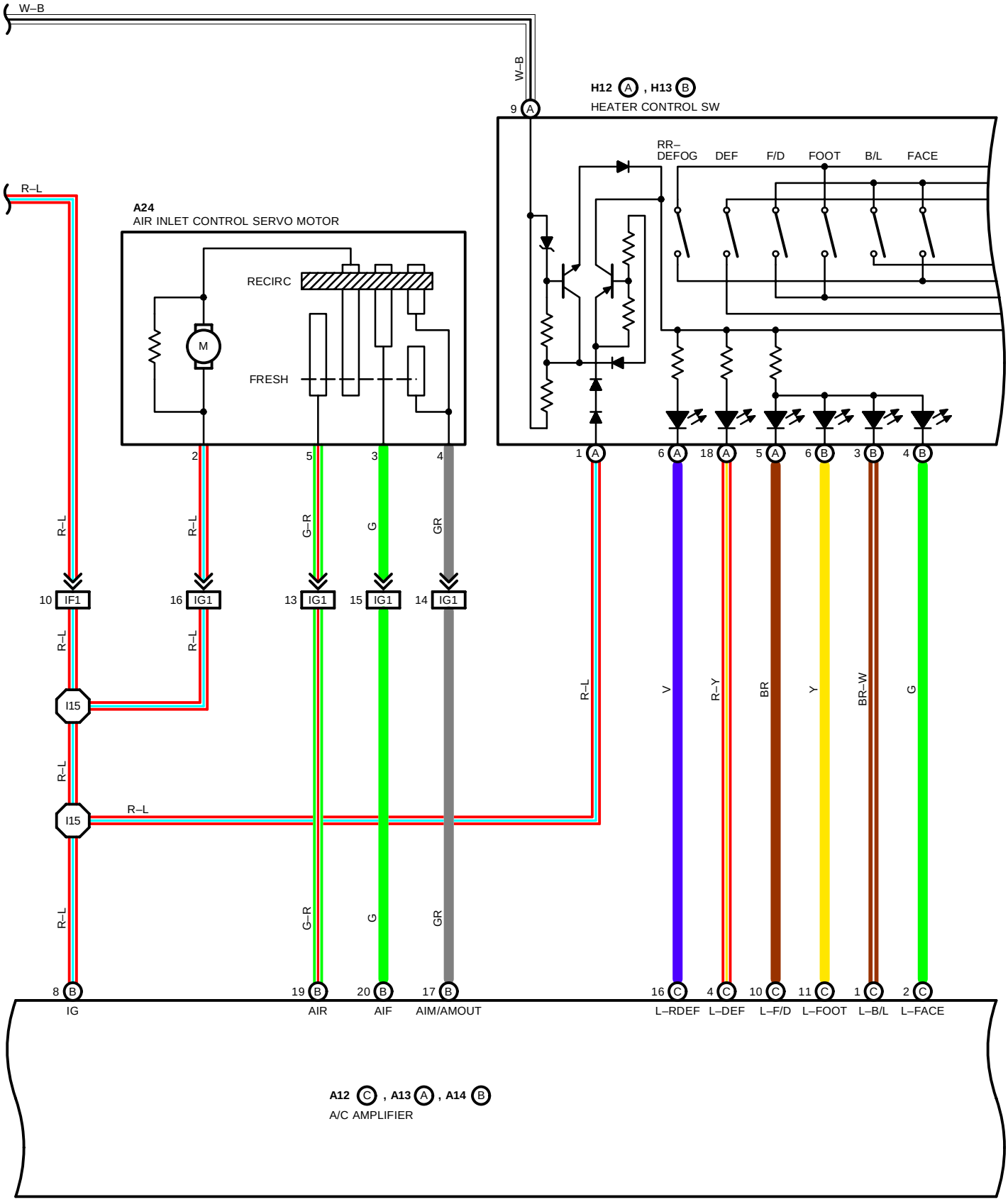
W–B
W–B
9 A
H12 A , H13 B
HEATER CONTROL SW
RR–DEFOG
DEF
F/D
FOOT
B/L
FACE
R–L
A24
AIR INLET CONTROL SERVO MOTOR
RECIRC
FRESH
M
2
5
3
4
1 A
6 A
18 A
5 A
6 B
3 B
4 B
R–L
R–L
G–R
G
GR
10 IF1
16 IG1
13 IG1
15 IG1
14 IG1
R–L
R–L
I15
R–L
I15
R–L
R–L
V
R–Y
BR
Y
BR–W
G
G–R
G
GR
8 B
19 B
20 B
17 B
16 C
4 C
10 C
11 C
1 C
2 C
IG
AIR
AIF
AIM/AMOUT
L–RDEF
L–DEF
L–F/D
L–FOOT
L–B/L
L–FACE
A12 C , A13 A , A14 B
A/C AMPLIFIER

*1 : 2JZ–GTE
*2 : 2JZ–GE

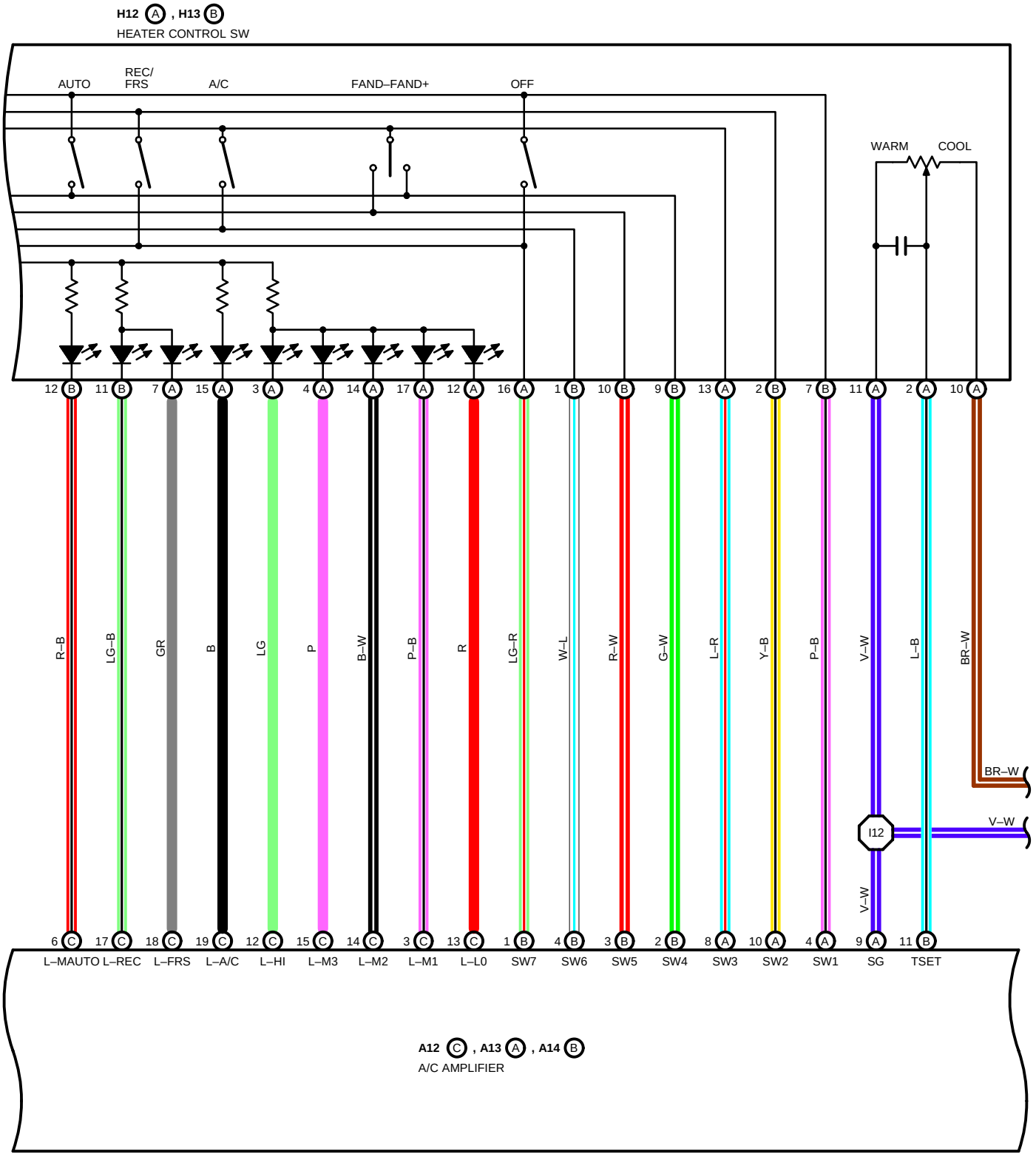

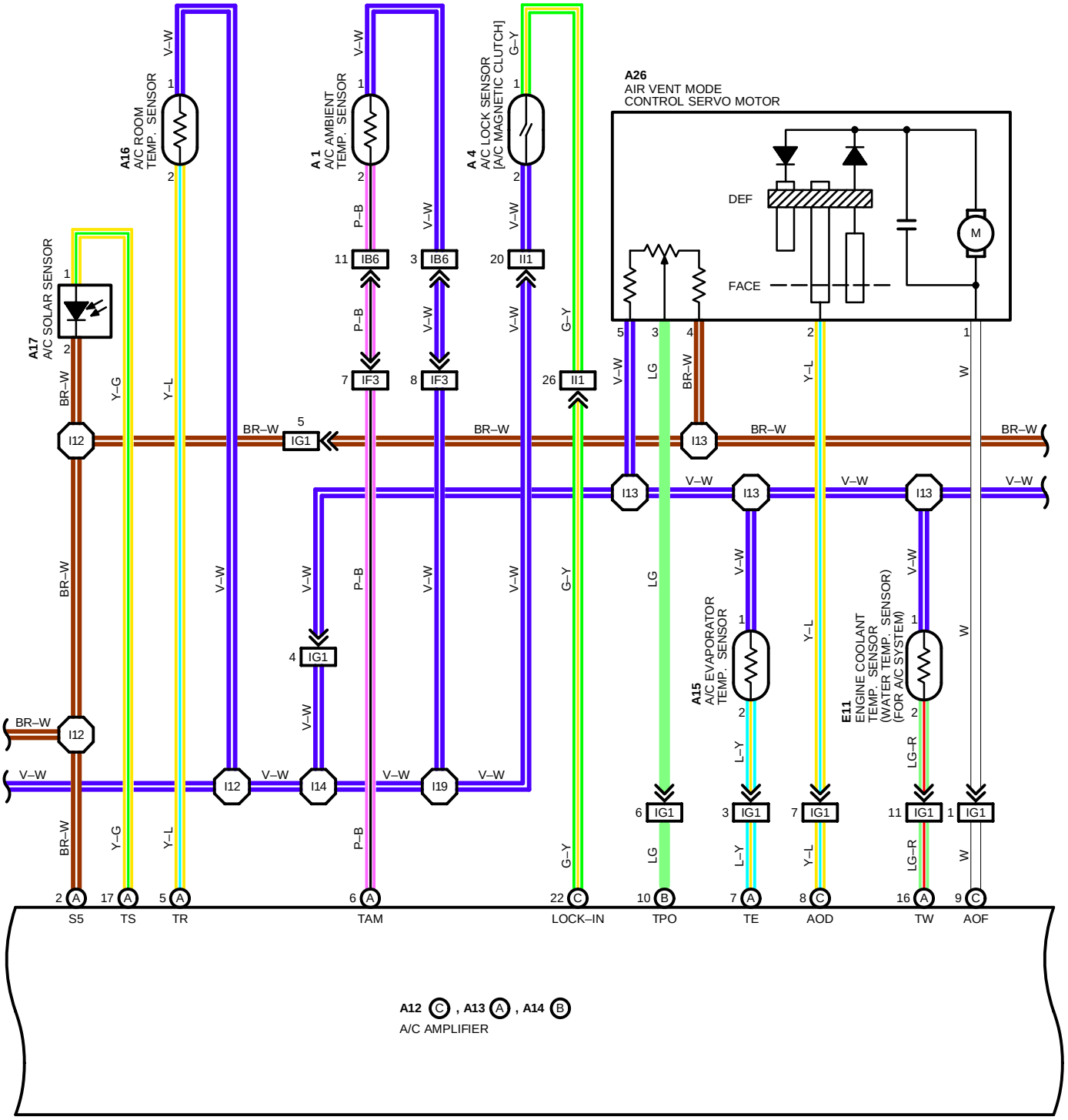
A16
A/C ROOM TEMP. SENSOR
A 1
A/C AMBIENT TEMP. SENSOR
A 4
A/C LOCK SENSOR [A/C MAGNETIC CLUTCH]
A26
AIR VENT MODE CONTROL SERVO MOTOR
DEF
FACE
M
A17
A/C SOLAR SENSOR
A15
A/C EVAPORATOR TEMP. SENSOR
E11
ENGINE COOLANT TEMP. SENSOR (WATER TEMP. SENSOR) (FOR A/C SYSTEM)
I12
I13
IG1
IB6
IF3
II1
I14
I19
V–W
BR–W
Y–G
Y–L
P–B
G–Y
LG
L–Y
LG–R
W
S5
TS
TR
TAM
LOCK–IN
TPO
TE
AOD
TW
AOF
A12 C , A13 A , A14 B
A/C AMPLIFIER

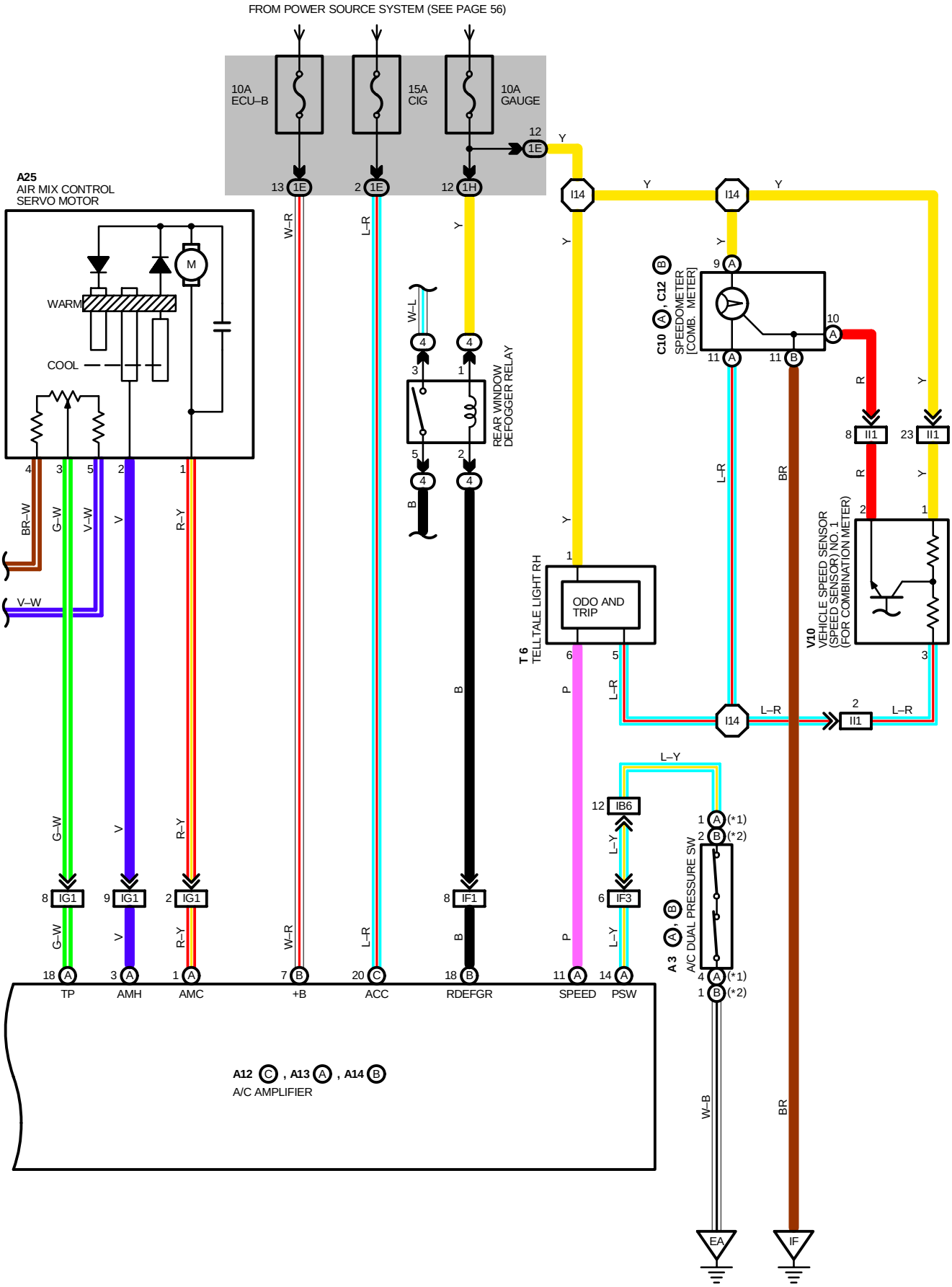
FROM POWER SOURCE SYSTEM (SEE PAGE 56)
10A ECU–B
15A CIG
10A GAUGE
A25
AIR MIX CONTROL SERVO MOTOR
WARM
COOL
M
REAR WINDOW DEFOGGER RELAY
C10 , C12
SPEEDOMETER [COMB. METER]
T6
TELLTALE LIGHT RH
ODO AND TRIP
V10
VEHICLE SPEED SENSOR (SPEED SENSOR) NO. 1 (FOR COMBINATION METER)
A3
A/C DUAL PRESSURE SW
A12 , A13 , A14
A/C AMPLIFIER
TP
AMH
AMC
+B
ACC
RDEFGR
SPEED
PSW
EA
IF

RADIATOR FAN AND AUTOMATIC AIR CONDITIONING

SERVICE HINTS

A 4 A/C MAGNETIC CLUTCH
4 – GROUND: APPROX. **3.7**

A 3(A) A/C DUAL PRESSURE SW [A/C TRIPLE PRESSURE SW] (2JZ–GTE)
(A) 1–**(A)** 4 : OPEN ABOVE APPROX. **225** KPA (**33** PSI, **2.3** KG/CM^2) OR **3140** KPA (**458** PSI, **32** KG/CM^2)

A 3(B) A/C DUAL PRESSURE SW (2JZ–GE)
(B) 1–**(B)** 2 : OPEN ABOVE APPROX. **225** KPA (**33** PSI, **2.3** KG/CM^2) OR **3140** KPA (**458** PSI, **32** KG/CM^2)

A12(C), A13(A), A14(B) A/C AMPLIFIER

+B – GROUND:	ALWAYS APPROX. **10–14** VOLTS
IG – GROUND:	APPROX. **10–14** VOLTS WITH IGNITION SW AT **ON** POSITION
HR – GROUND:	APPROX. **10–14** VOLTS WITH IGNITION SW AT **ON** POSITION AND DO NOT TURN THE BLOWER MOTOR BELOW **1** VOLTS WITH IGNITION SW AT **ON** POSITION AND TURN THE BLOWER MOTOR
ACC – GROUND:	APPROX. **10–14** VOLTS WITH IGNITION SW AT **ACC** OR **ON** POSITION
TW – GROUND:	**10–14** VOLTS AT START THE ENGINE AND MAX. COLD POSITION OF A/C TEMP. CONTROL SW BELOW **1** VOLTS AT START THE ENGINE AND MAX. WARM POSITION OF A/C TEMP. CONTROL SW
MGC – GROUND:	BELOW **1** VOLTS AT START THE ENGINE, PUSH THE A/C AUTO SW AND A/C SW **ON** POSITION **10–14** VOLTS AT START THE ENGINE, PUSH THE A/C AUTO SW AND A/C SW **OFF** POSITION
BLW – GROUND:	**1.0–3.0** VOLTS WITH THE IGNITION SW ON AND TURN THE BLOWER MOTOR
S5 – GROUND:	**4–6** VOLTS WITH THE IGNITION SW ON
SG – GROUND:	ALWAYS CONTINUOUS
AMH – AMC	**13–19** VOLTS WITH IGNITION SW OFF
AOF – GROUND:	APPROX. **12** VOLTS WITH FACE SW ON
AOD – GROUND:	APPROX. **12** VOLTS WITH DEF SW ON
GND – GROUND:	ALWAYS CONTINUOUS

: PARTS LOCATION

CODE		SEE PAGE	CODE		SEE PAGE	CODE		SEE PAGE
A 1		24 (2JZ–GTE)	**A17**		28	**H12**	A	29
		26 (2JZ–GE)	**A24**		28	**H13**	B	29
A 2		24	**A25**		28	**I 4**		27
A 3	A	24 (2JZ–GTE)	**A26**		28	**J 1**		29
	B	26 (2JZ–GE)	**B 3**		28	**R 1**		25
A 4		24 (2JZ–GTE)	**B 4**	A	28	**R 2**		25
		26 (2JZ–GE)	**B 5**	B	28	**R 3**		25
A12	C	28	**C10**	A	28	**T 6**		29
A13	A	28	**C12**	B	28	**V10**		25 (2JZ–GTE)
A14	B	28	**E 5**		24			27 (2JZ–GE)
A15		28	**E10**		29			
A16		28	**E11**		29			

: RELAY BLOCKS

CODE	SEE PAGE	RELAY BLOCKS (RELAY BLOCK LOCATION)
2	22	R/B NO. 2 (ENGINE COMPARTMENT LEFT)
4	23	R/B NO. 4 (LEFT KICK PANEL)

: JUNCTION BLOCK AND WIRE HARNESS CONNECTOR

CODE	SEE PAGE	JUNCTION BLOCK AND WIRE HARNESS (CONNECTOR LOCATION)
1A	20	ENGINE ROOM MAIN WIRE AND J/B NO. 1 (LEFT KICK PANEL)
1E	20	INSTRUMENT PANEL WIRE AND J/B NO. 1 (LEFT KICK PANEL)
1H	20	COWL WIRE AND J/B NO. 1 (LEFT KICK PANEL)
1K		

: CONNECTOR JOINING WIRE HARNESS AND WIRE HARNESS

CODE	SEE PAGE	JOINING WIRE HARNESS AND WIRE HARNESS (CONNECTOR LOCATION)
EA1	32 (2JZ–GTE) 34 (2JZ–GE)	ENGINE WIRE AND ENGINE ROOM MAIN WIRE (NEAR THE R/B NO. 2)
IB2	36	ENGINE ROOM MAIN WIRE AND COWL WIRE (LEFT KICK PANEL)
IB4	36	ENGINE ROOM MAIN WIRE AND COWL WIRE (RIGHT KICK PANEL)
IB6		
IF1	36	INSTRUMENT PANEL WIRE AND COWL WIRE (INSTRUMENT PANEL REINFORCEMENT LH)
IF3	36	INSTRUMENT PANEL WIRE AND COWL WIRE (RIGHT KICK PANEL)
IG1	38	INSTRUMENT PANEL WIRE AND COWL NO. 3 WIRE (BEHIND HEATER CONTROL SW)
II1	38	ENGINE WIRE AND INSTRUMENT PANEL WIRE (RIGHT KICK PANEL)
IK1	38	COWL NO. 4 WIRE AND COWL WIRE (RIGHT KICK PANEL)

: GROUND POINTS

CODE	SEE PAGE	GROUND POINTS LOCATION
EA	32 (2JZ–GTE)	FRONT SIDE OF RIGHT FENDER
	34 (2JZ–GE)	
EB	32 (2JZ–GTE)	FRONT SIDE OF LEFT FENDER
	34 (2JZ–GE)	
IF	36	LEFT KICK PANEL
IG	36	RIGHT KICK PANEL
IH		

: SPLICE POINTS

CODE	SEE PAGE	WIRE HARNESS WITH SPLICE POINTS	CODE	SEE PAGE	WIRE HARNESS WITH SPLICE POINTS
E 2	32	ENGINE ROOM MAIN WIRE	**E26**	34	ENGINE WIRE
E 3			**I12**	38	INSTRUMENT PANEL WIRE
E 5			**I13**	38	COWL NO. 3 WIRE
E 9			**I14**	38	INSTRUMENT PANEL WIRE
E11	32	ENGINE WIRE	**I15**		
E20	34	ENGINE ROOM MAIN WIRE	**I19**		

A 1 BLACK



A 2 BLACK (2JZ-GTE) A 3 Ⓐ BLACK (2JZ-GE) A 3 Ⓑ GRAY

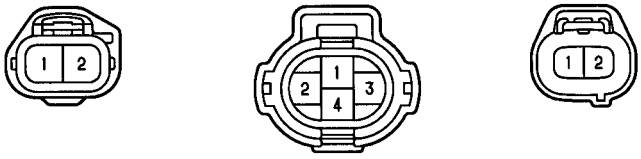

A 4 GRAY



A12 Ⓒ ORANGE

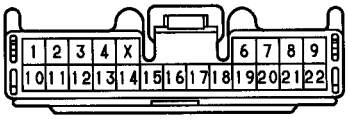

A13 Ⓐ ORANGE

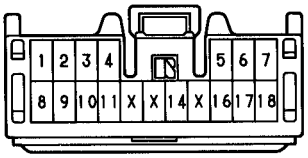

A14 Ⓑ ORANGE

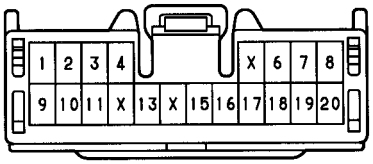

A15



A16 BLACK

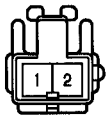

A17 GRAY



A24

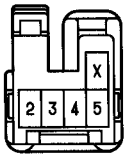

A25

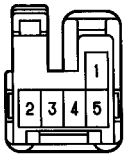

A26

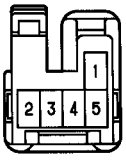

B 3 BLACK

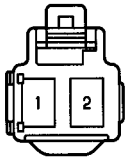

B 4 Ⓐ BLACK

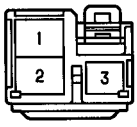

B 5 Ⓑ BLACK

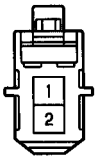

C10 Ⓐ BLUE

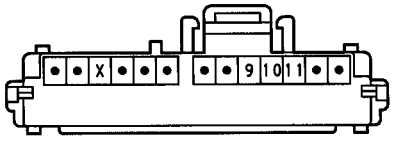

(2JZ-GTE) C12 Ⓑ

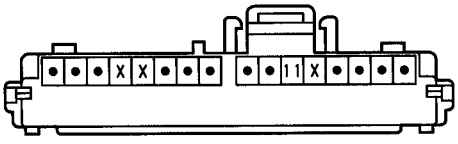

(2JZ-GE) C12 Ⓑ

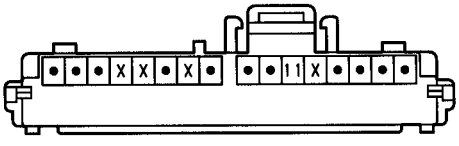

E 5 DARK GRAY



(2JZ-GTE) E10 DARK GRAY

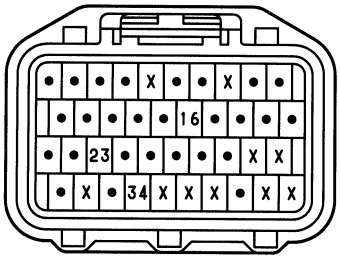

(2JZ-GE) E10 DARK GRAY

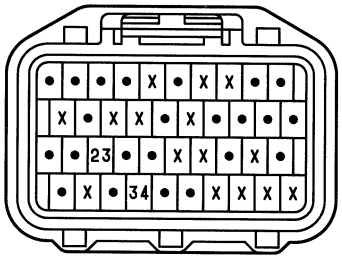

E11



H12 (A) ORANGE

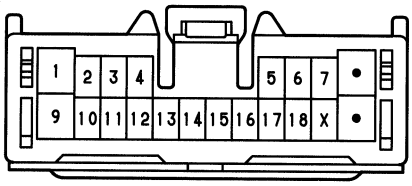

H13 (B) ORANGE

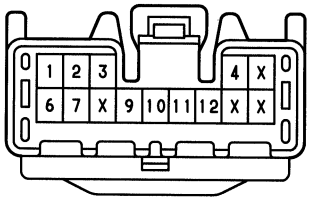

I 4 BLACK

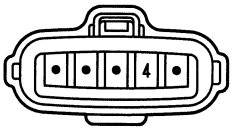

J 1

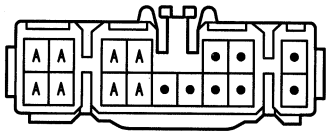

(HINT:SEE PAGE 7)

R 1 BLACK



R 2 BLACK



R 3 GRAY

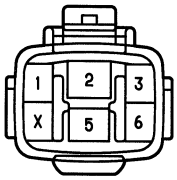

T 6

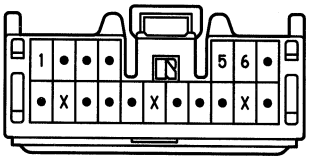

V10 BLACK



GROUND POINT

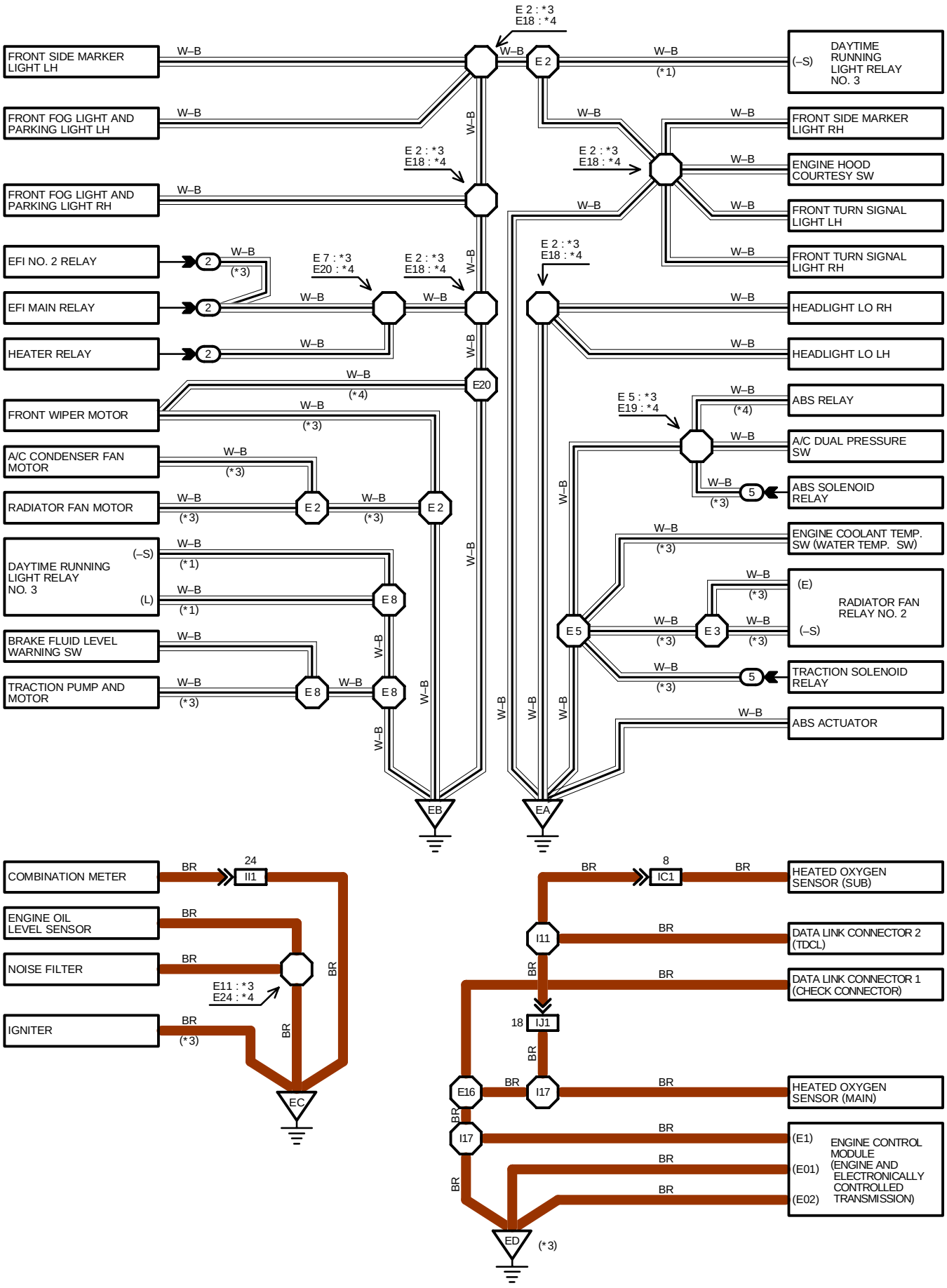

*1 : CANADA
*2 : USA
*3 : 2JZ–GTE
*4 : 2JZ–GE

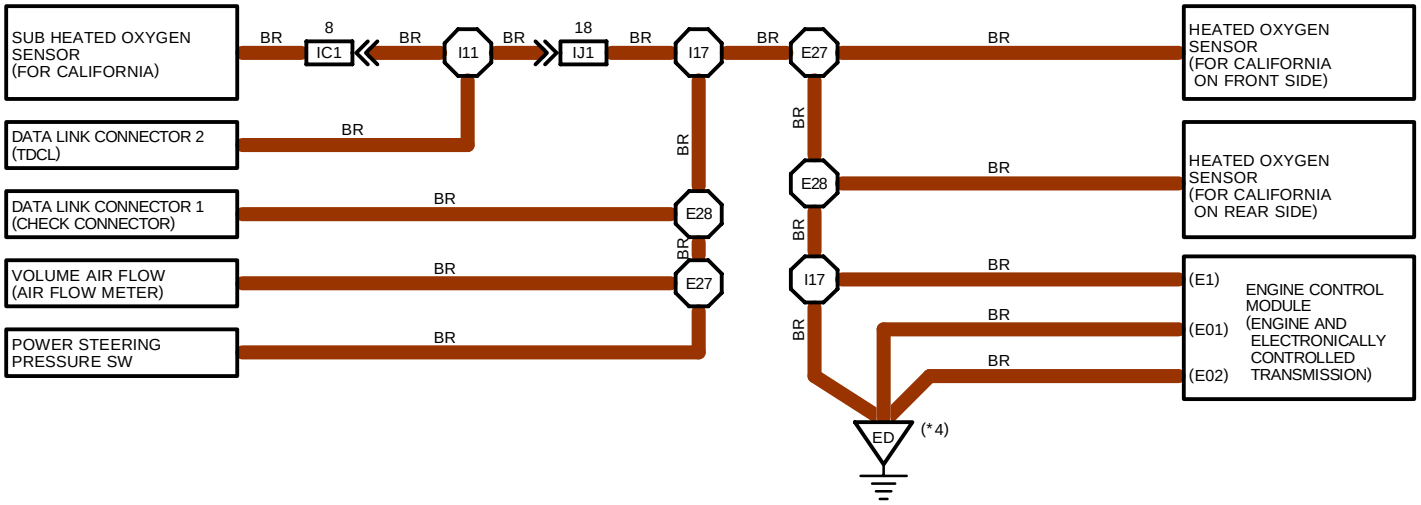

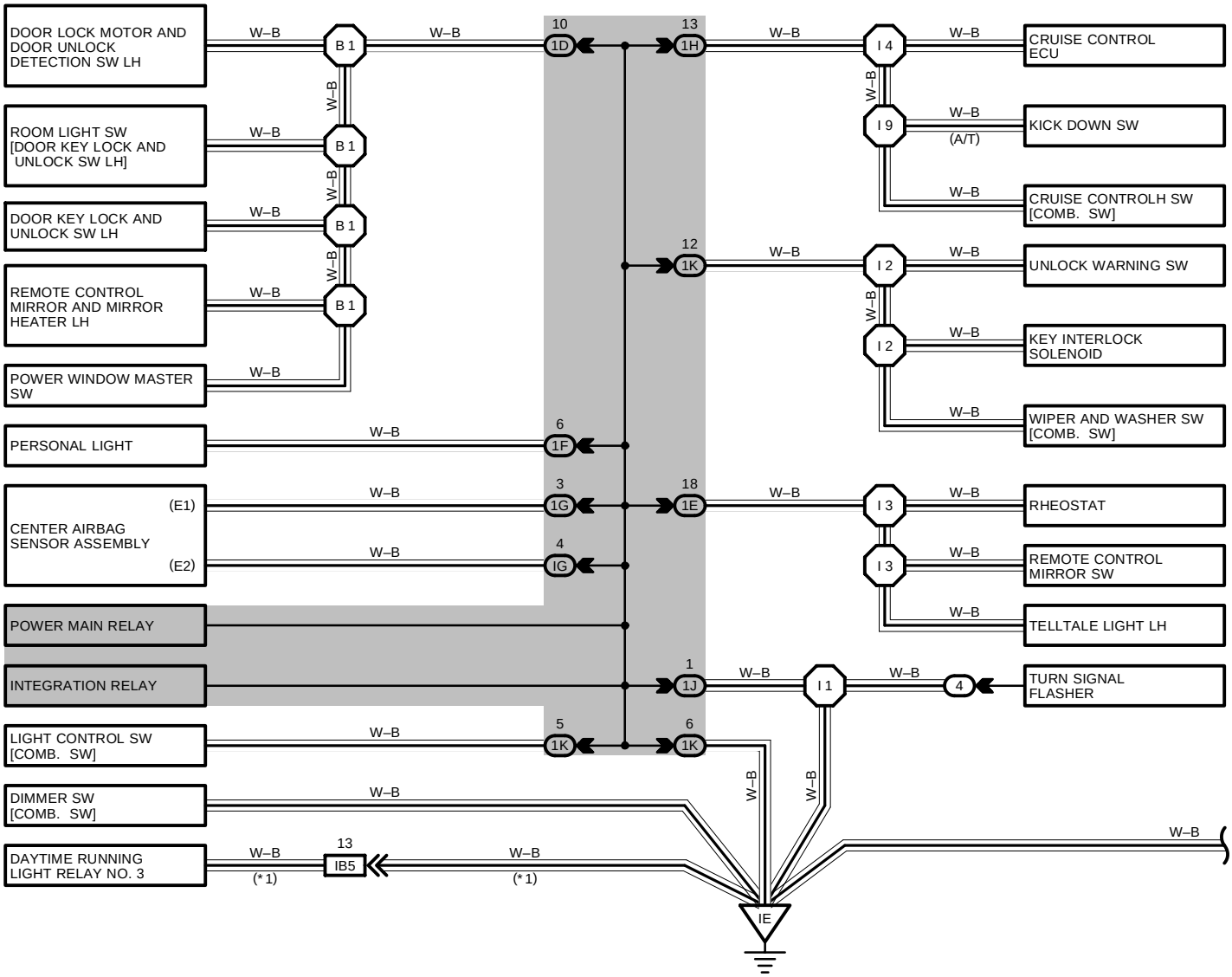

GROUND POINT

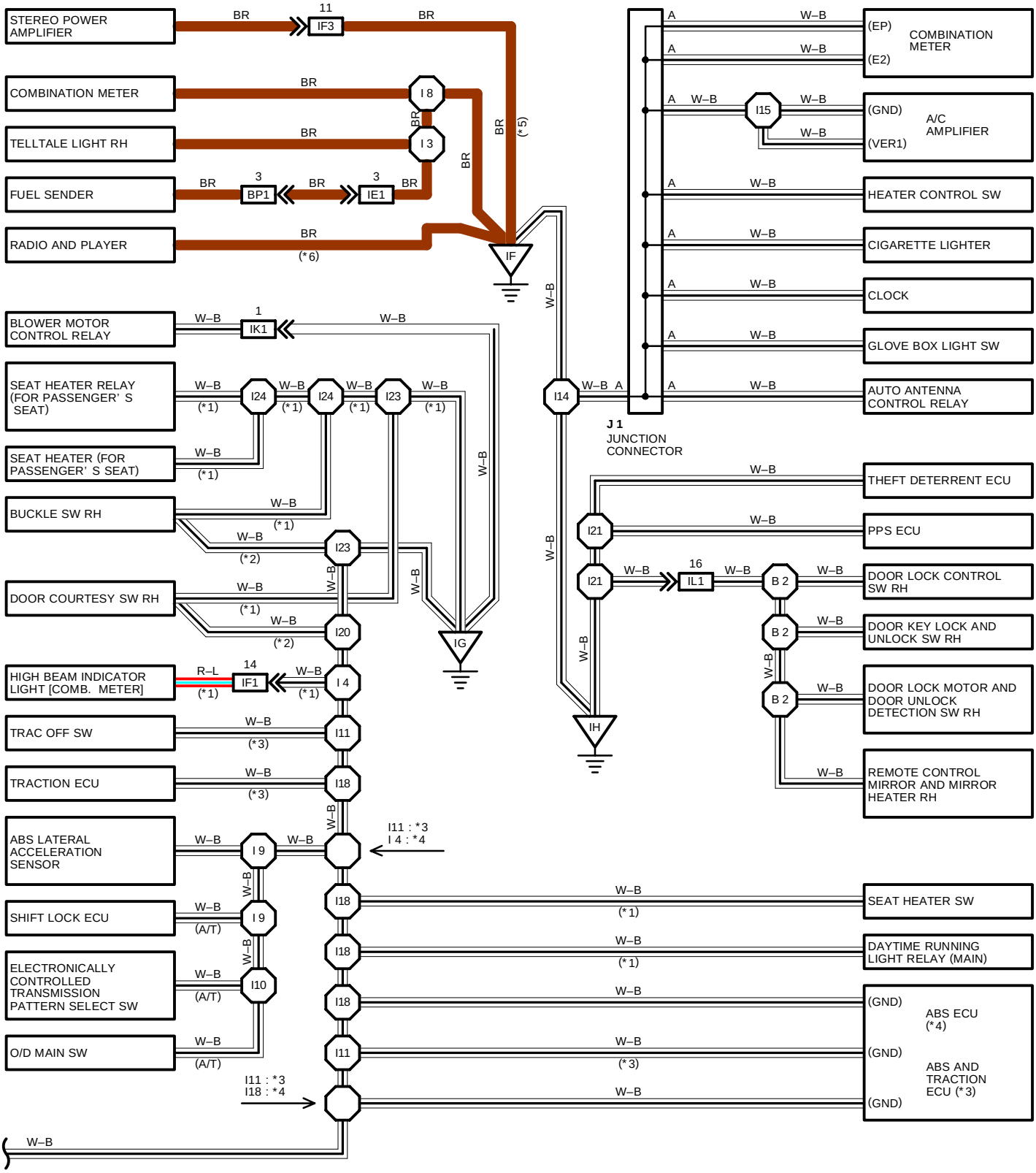

*1 : CANADA
*2 : USA
*3 : 2JZ–GTE
*4 : 2JZ–GE
*5 : W/ STEREO POWER AMPLIFIER
*6 : W/O STEREO POWER AMPLIFIER

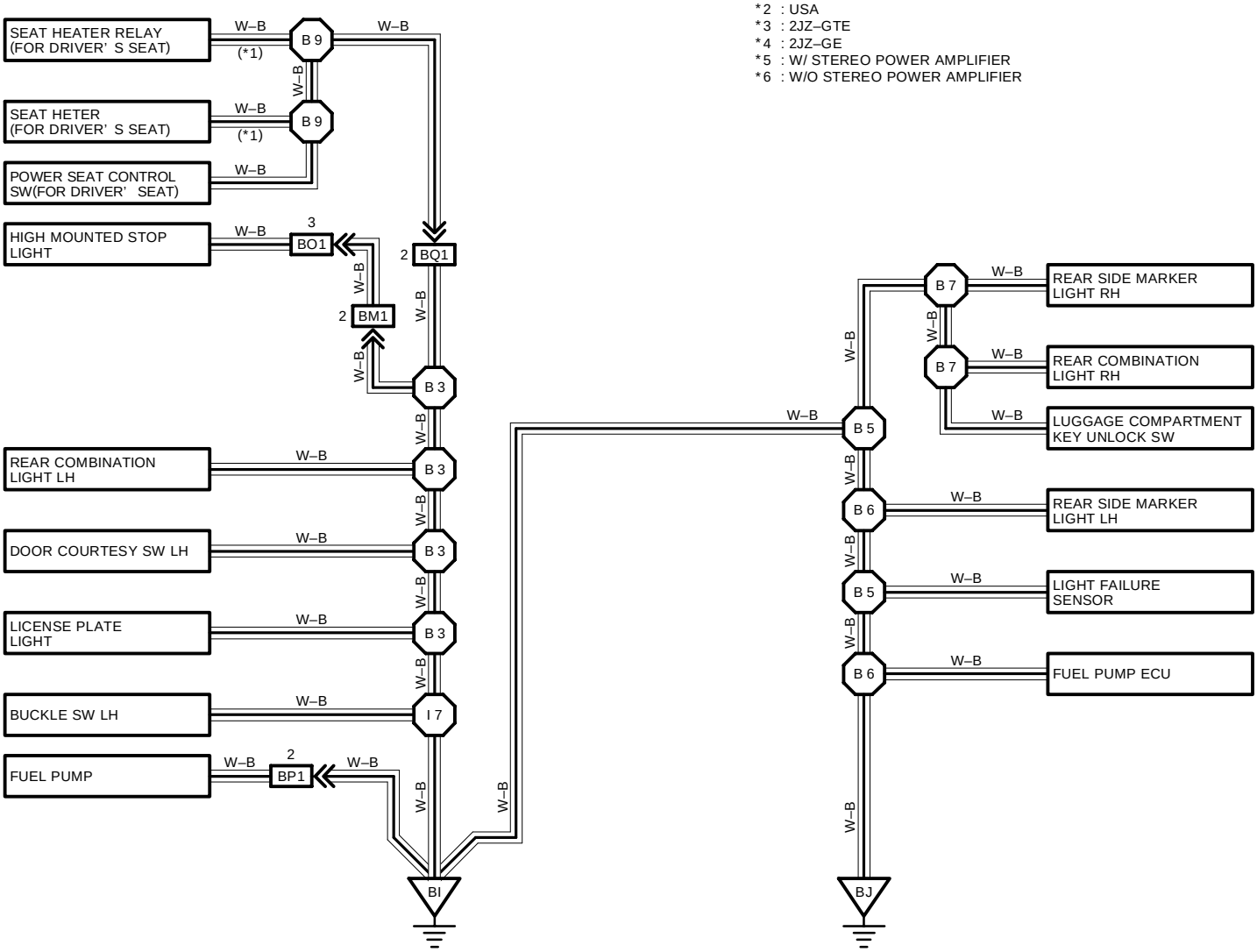

GROUND POINT

: PARTS LOCATION

CODE	SEE PAGE	CODE		SEE PAGE	CODE	SEE PAGE
J 1	29					

: RELAY BLOCKS

CODE	SEE PAGE	RELAY BLOCKS (RELAY BLOCK LOCATION)
2	22	R/B NO. 2 (ENGINE COMPARTMENT LEFT
4	23	R/B NO. 4 (LEFT KICK PANEL)
5	23	R/B NO. 5 (ENGINE COMPARTMENT RIGHT)

: JUNCTION BLOCK AND WIRE HARNESS CONNECTOR

CODE	SEE PAGE	JUNCTION BLOCK AND WIRE HARNESS (CONNECTOR LOCATION)
1D	20	FRONT DOOR LH WIRE AND J/B NO. 1 (LEFT KICK PANEL)
1E	20	INSTRUMENT PANEL WIRE AND J/B NO. 1 (LEFT KICK PANEL)
1F	20	ROOF WIRE AND J/B NO. 1 (LEFT KICK PANEL)
1G	20	COWL WIRE AND J/B NO. 1 (LEFT KICK PANEL)
1H		
1J		
1K		

: CONNECTOR JOINING WIRE HARNESS AND WIRE HARNESS

CODE	SEE PAGE	JOINING WIRE HARNESS AND WIRE HARNESS (CONNECTOR LOCATION)
IB5	36	ENGINE ROOM MAIN WIRE AND COWL WIRE (RIGHT KICK PANEL)
IC1	36	FLOOR NO. 2 WIRE AND COWL WIRE (LEFT KICK PANEL)
IE1	36	INSTRUMENT PANEL WIRE AND FLOOR NO. 2 WIRE (LEFT KICK PANEL)
IF1	36	INSTRUMENT PANEL WIRE AND COWL WIRE (INSTRUMENT PANEL REINFORCEMENT LH)
IF3	36	INSTRUMENT PANEL WIRE AND COWL WIRE (RIGHT KICK PANEL)
II1	38	ENGINE WIRE AND INSTRUMENT PANEL WIRE (RIGHT KICK PANEL)
IJ1	38	ENGINE WIRE AND COWL WIRE (RIGHT KICK PANEL)
IK1	38	COWL NO. 4 WIRE AND COWL WIRE (RIGHT KICK PANEL)
IL1	38	FRONT DOOR RH WIRE AND INSTRUMENT PANEL WIRE
BM1	40	BACK DOOR NO. 1 WIRE AND FLOOR NO. 2 WIRE (LEFT SIDE OF PACKAGE TRAY TRIM)
BO1	40	BACK DOOR NO. 2 WIRE AND BACK DOOR NO. 1 WIRE
BP1	40	FUEL GAUGE WIRE AND FLOOR NO. 2 WIRE (LUGGAGE ROOM FRONT LH)
BQ1	42	FLOOR NO. 2 WIRE AND SEAT WIRE (UNDER THE FRONT LH SEAT)

: GROUND POINTS

CODE	SEE PAGE	GROUND POINTS LOCATION
EA	32 (2JZ–GTE)	FRONT SIDE OF RIGHT FENDER
	34 (2JZ–GE)	
EB	32 (2JZ–GTE)	FRONT SIDE OF LEFT FENDER
	34 (2JZ–GE)	
EC	32 (2JZ–GTE)	FRONT SIDE OF INTAKE MANIFOLD
	34 (2JZ–GE)	
ED	32 (2JZ–GTE)	REAR SIDE OF INTAKE MANIFOLD
	34 (2JZ–GE)	
IE	36	LEFT KICK PANEL
IF		
IG	36	RIGHT KICK PANEL
IH		
BI	40	LEFT QUARTER PILLAR
BJ	40	LOWER BACK PANEL CENTER

: SPLICE POINTS

CODE	SEE PAGE	WIRE HARNESS WITH SPLICE POINTS	CODE	SEE PAGE	WIRE HARNESS WITH SPLICE POINTS
E 2	32	ENGINE ROOM MAIN WIRE	**I 9**	38	COWL WIRE
E 3			**I10**		
E 5			**I11**		
E 7			**I14**	38	INSTRUMENT PANEL WIRE
E 8			**I15**		
E11	32	ENGINE WIRE	**I16**	38	CONSOLE BOX WIRE
E16			**I17**	38	ENGINE WIRE
E18	34	ENGINE ROOM MAIN WIRE	**I18**	38	COWL WIRE
E19			**I20**	38	COWL WIRE
E20			**I21**	38	INSTRUMENT PANEL WIRE
E24	34	ENGINE WIRE	**I23**	38	COWL WIRE
E27			**I24**		
E28			**B 1**	40	FRONT DOOR LH WIRE
I 1	38	COWL WIRE	**B 2**	40	FRONT DOOR RH WIRE
I 2			**B 3**	40	FLOOR NO. 2 WIRE
I 3	38	INSTRUMENT PANEL WIRE	**B 5**		
I 4	38	COWL WIRE	**B 6**		
I 7	38	FLOOR NO. 2 WIRE	**B 7**		
I 8	38	INSTRUMENT PANEL WIRE	**B 9**	42	SEAT WIRE

J 1

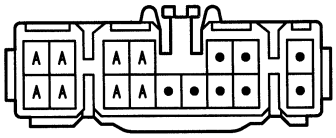

(HINT:SEE PAGE 7)

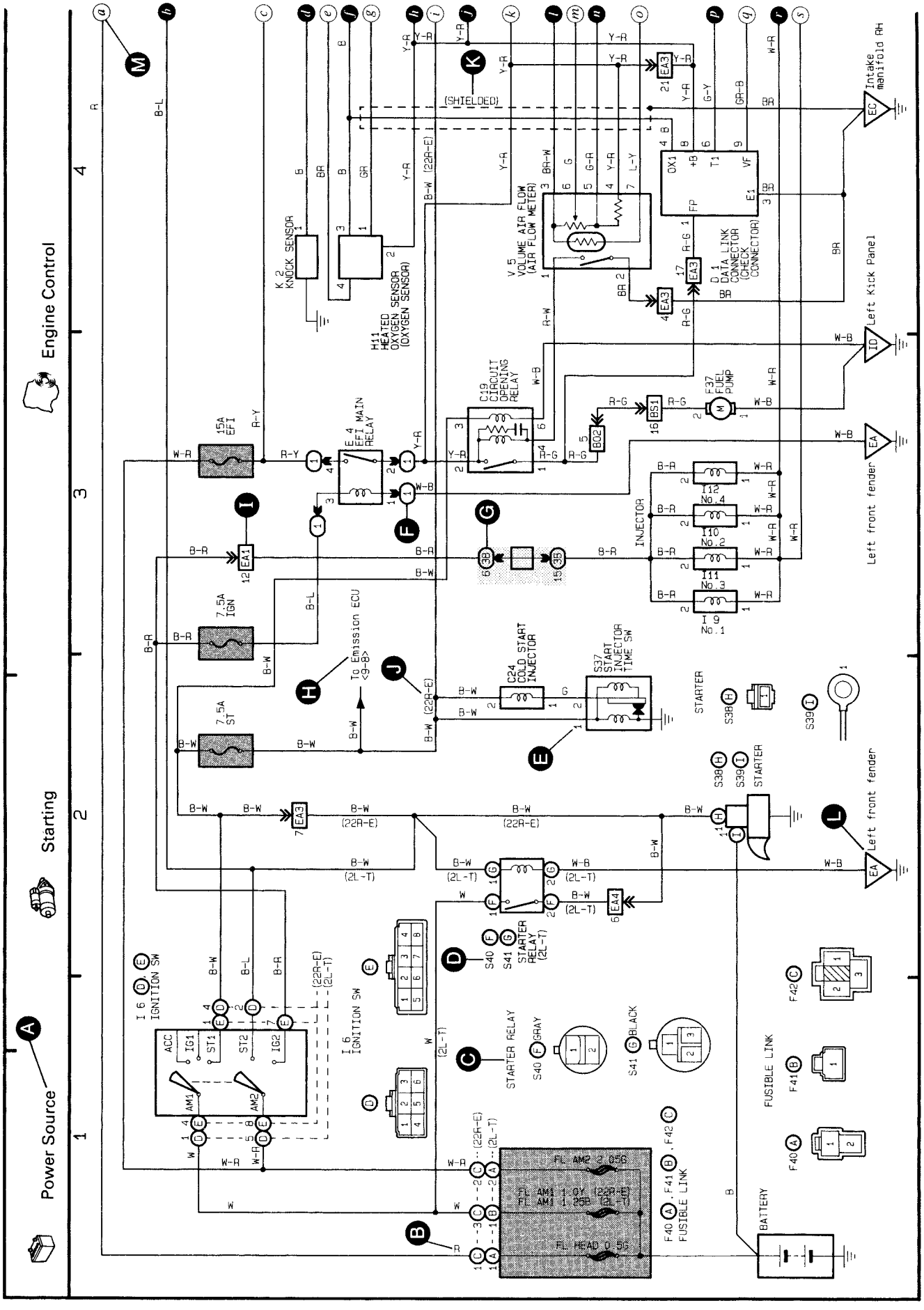

* The system shown here is an EXAMPLE ONLY. It is different to the actual circuit shown in the wiring diagram section.

Ⓐ: System Title

Ⓑ: Indicates the wiring color.

Wire colors are indicated by an alphabetical code.

B	= Black	L	= Blue	R	= Red
BR	= Brown	LG	= Light Green	V	= Violet
G	= Green	O	= Orange	W	= White
GR	= Gray	P	= Pink	Y	= Yellow

The first letter indicates the basic wire color and the second letter indicates the color of the stripe.

Example: L – Y

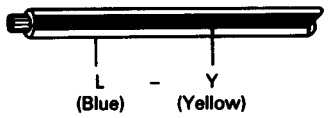

Ⓒ: Indicates the connector to be connected to a part (the numeral indicates the pin No.)

Ⓓ: The position of the parts is the same as shown in the wiring diagram and wire routing.

Ⓔ: Indicates the pin number of the connector. The numbering system is different for female and male connectors.

Example: **Numbered in order from upper left to lower right** **Numbered in order from upper right to lower left**

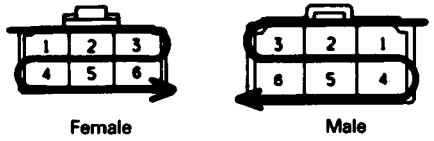

The numbering system for the overall wiring diagram is the same as above.

Ⓕ: Indicates a Relay Block. No Shading is used and only the Relay Block No. is shown to distinguish it from the J/B.

Example: ① Indicates Relay Block No. 1.

Ⓖ: Junction Block (The number in the circle is the J/B No. and connector code is shown beside it). Junction Blocks are shaded to clearly separate them from other parts (different junction blocks are shaded differently for further clarification.).

Example:

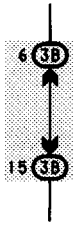

3B indicates that it is inside Junction Block No. 3.

Ⓗ: Indicates related system.

Ⓘ: Indicates the wiring harness and wiring harness connector. The wiring harness with male terminal is shown with arrows **(≫)**.

Outside numerals are pin numbers.

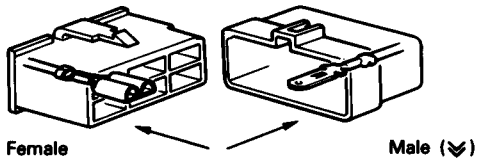

Ⓙ: ( ) is used to indicate different wiring and connector, etc. when the vehicle model, engine type, or specification is different.

Ⓚ: Indicates a shielded cable.



Ⓛ: Indicates and located on ground point.

Ⓜ: The same code occuring on the next page indicates that the wire harness is continuous.

SYSTEM INDEX

SYSTEMS	LOCATION
ABS (Anti–Lock Brake System)	18–3
ABS and Traction Control	19–3
Auto Antenna	24–4
Back–Up Light	16–8 (for 2JZ–GE) 15–8 (for 2JZ–GTE)
Charging	1–4
Cigarette Lighter	21–1
Clock	20–3
Combination Meter	25–3
Cruise Control	17–3
Electric Tension Reducer	20–4
Electronically Controlled Transmission and A/T Indicator	16–3 (for 2JZ–GE) 15–3 (for 2JZ–GTE)
Engine Control	4–3 (for 2JZ–GE) 3–3 (for 2JZ–GTE)
Fog Light	5–4
Front Wiper and Washer	22–4
Headlight	6–3 (for Canada) 5–3 (for USA)
Horn	9–4
Ignition	2–4 (for 2JZ–GE) 2–2 (for 2JZ–GTE)
Illumination	8–3
Interior Light	10–3
Light Auto Turn Off	11–2
Power Seat	12–4
Power Source	1~26–1
Power Window	12–2
PPS (Progressive Power Steering)	20–3
Radiator Fan and Automatic Air Conditioning	26–3
Radio and Player	23–3 (w/ Stereo Power Amplifier) 24–2 (w/o Stereo Power Amplifier)
Remote Window Defogger and Mirror Heater	20–2
Rear Wiper and Washer	22–2
Remote Control Mirror	11–4
Seat Heater (for Canada)	21–4
Shift Lock	21–2
SRS (Supplemental Restraint System)	13–3
Starting	1–2
Stop Light	7–4
Taillight	7–2
Theft Deterrent and Door Lock Control	14–3
Turn Signal and Hazard Warning Light	9–2
Unlock and Seat Belt Warning	10–2

1 SUPRA ELECTRICAL WIRING DIAGRAM

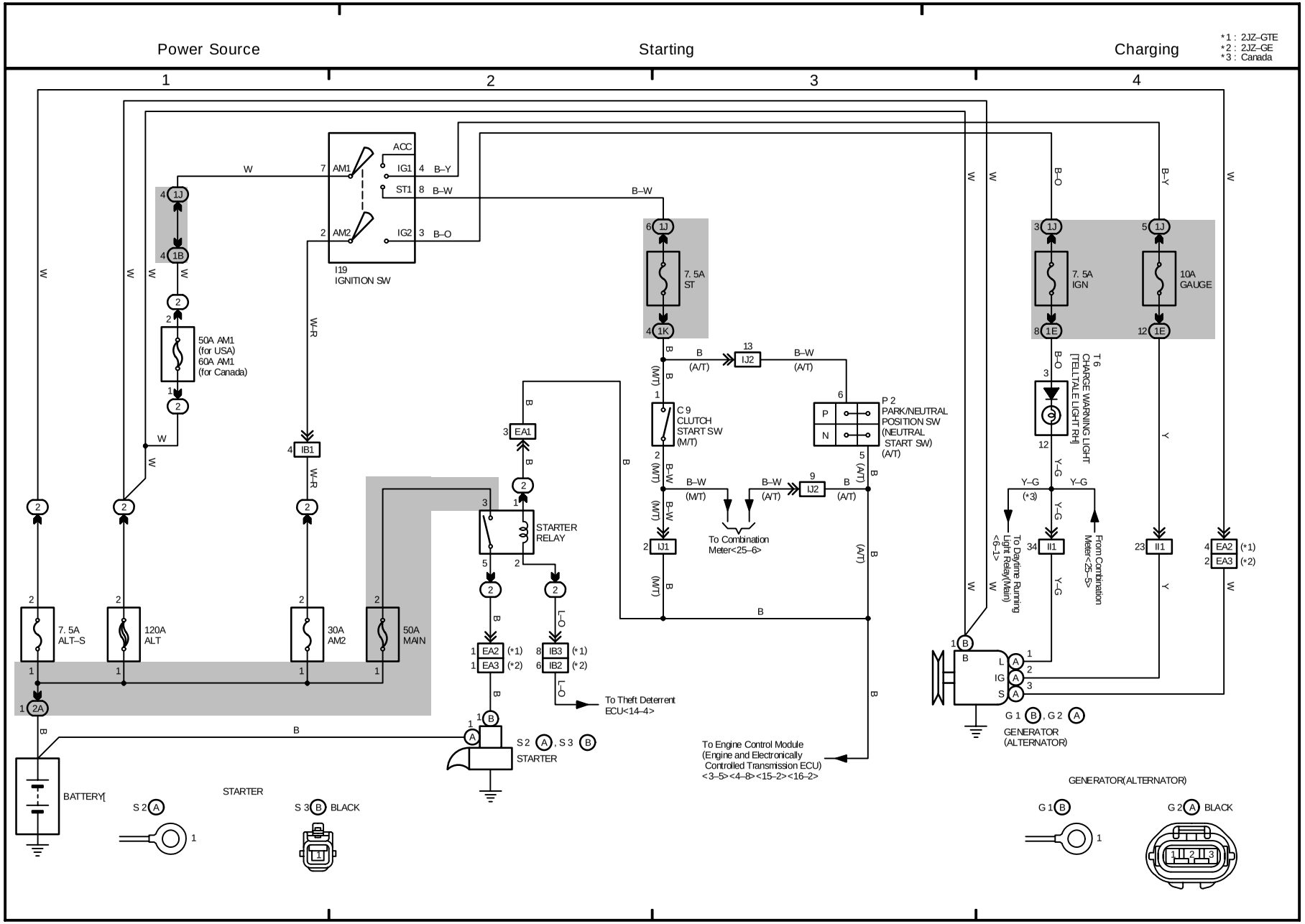

OVERALL ELECTRICAL WIRING DIAGRAM

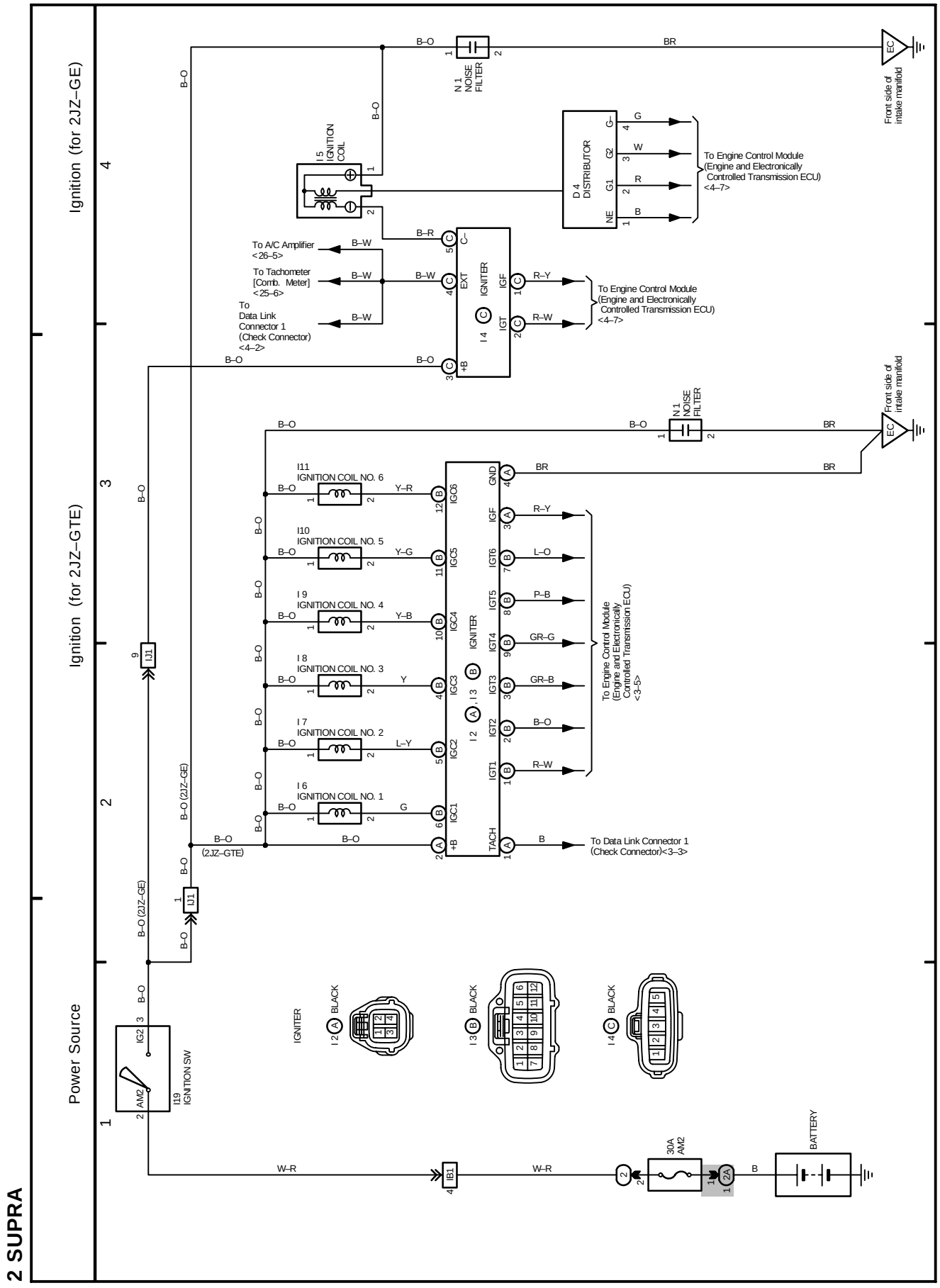

OVERALL ELECTRICAL WIRING DIAGRAM

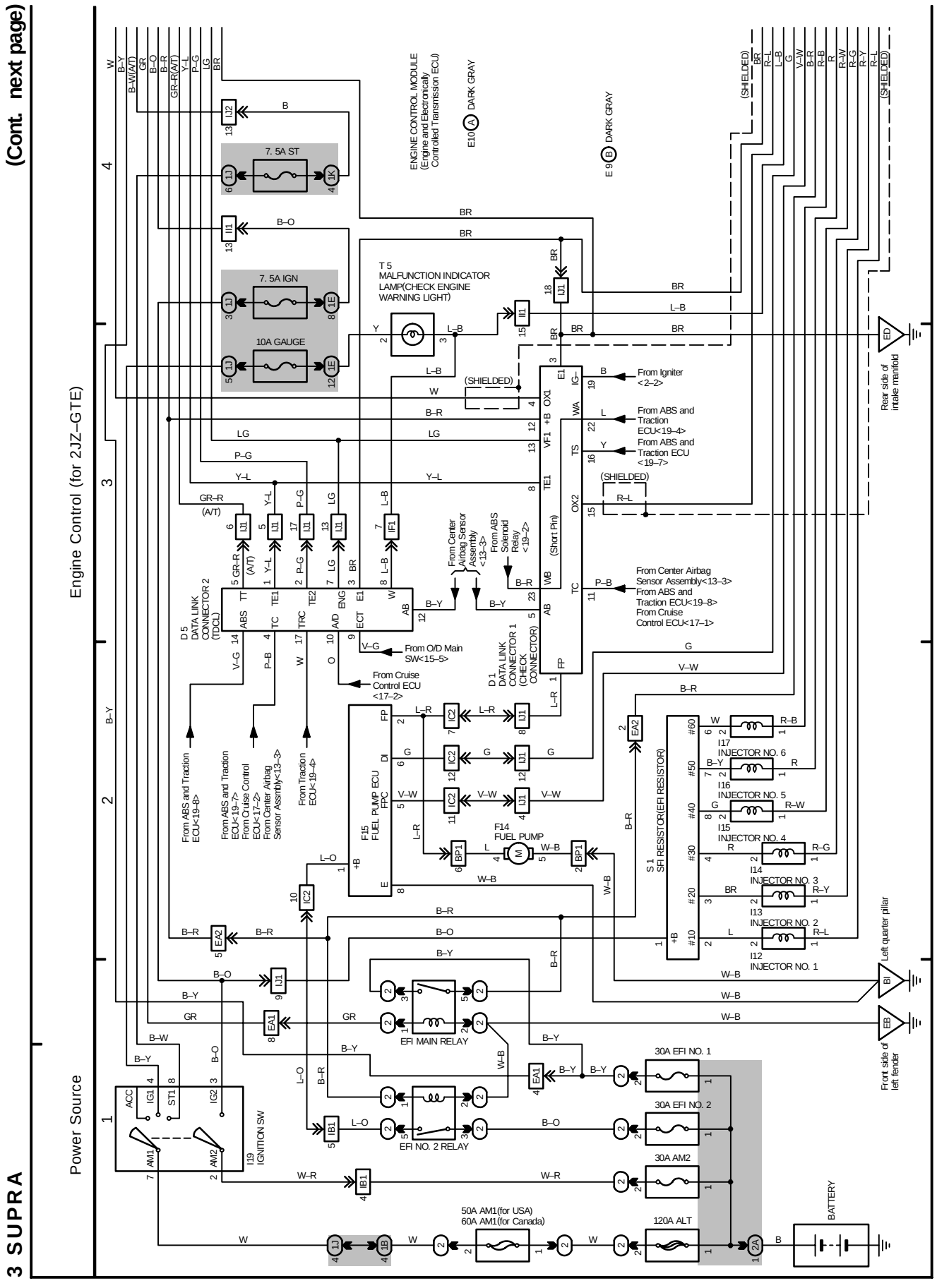

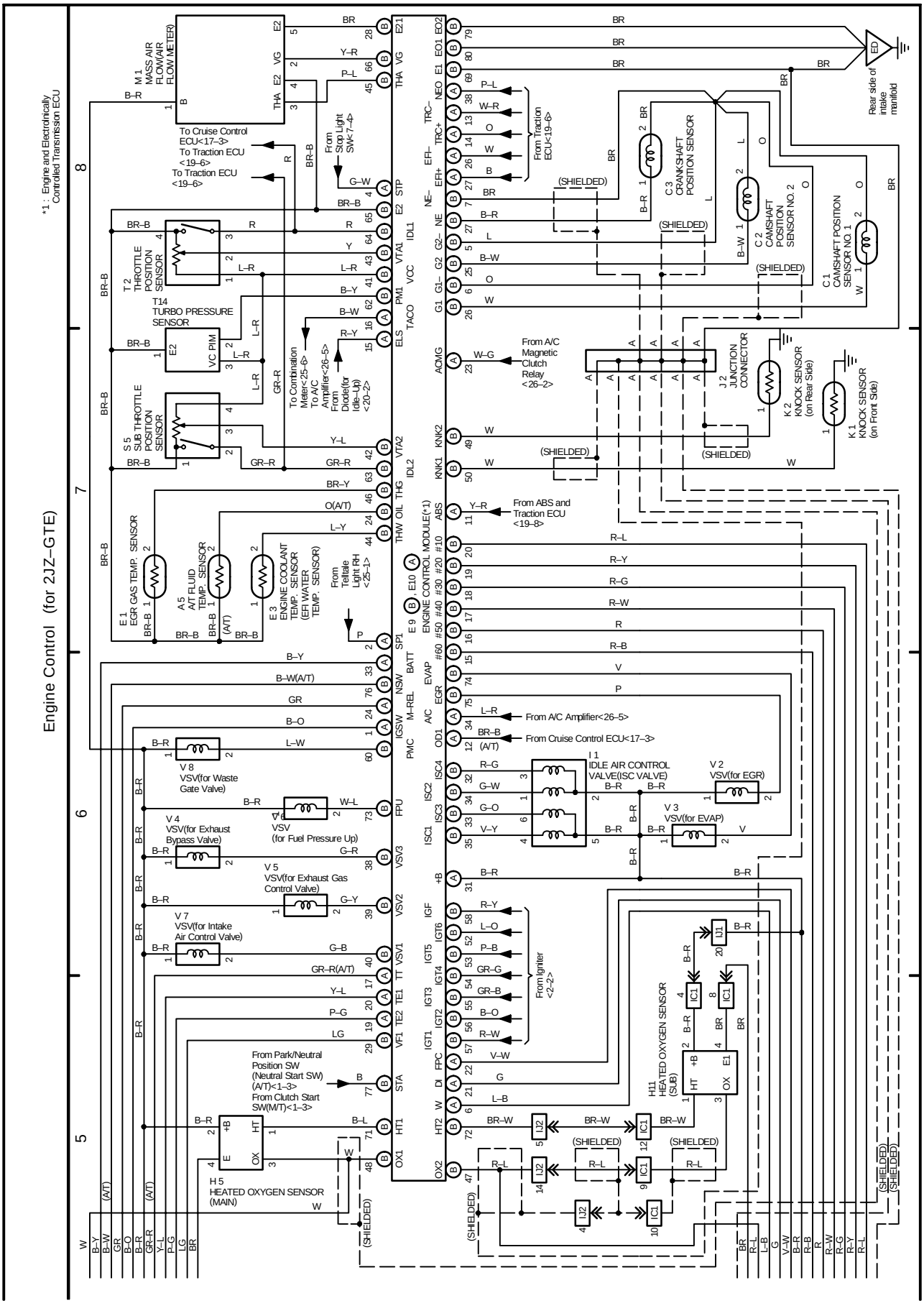
Engine Control (for 2JZ–GTE)
*1 : Engine and Electronically Controlled Transmission ECU
M 1 MASS AIR FLOW(AIR FLOW METER)
To Cruise Control ECU<17–3>
To Traction ECU <19–6>
To Traction ECU <19–6>
From Stop Light SW<7–4>
From Traction ECU<19–6>
T 2 THROTTLE POSITION SENSOR
T14 TURBO PRESSURE SENSOR
S 5 SUB THROTTLE POSITION SENSOR
To Combination Meter<25–6>
To A/C Amplifier<26–5>
From Diode(for Idle–Up) <20–2>
From A/C Magnetic Clutch Relay <26–2>
C 3 CRANKSHAFT POSITION SENSOR
C 2 CAMSHAFT POSITION SENSOR NO. 2
C 1 CAMSHAFT POSITION SENSOR NO. 1
J 2 JUNCTION CONNECTOR
K 2 KNOCK SENSOR (on Rear Side)
K 1 KNOCK SENSOR (on Front Side)
Rear side of intake manifold
E 1 EGR GAS TEMP. SENSOR
A 5 A/T FLUID TEMP. SENSOR
E 3 ENGINE COOLANT TEMP. SENSOR (EFI WATER TEMP. SENSOR)
From Telltale Light RH <25–1>
From ABS and Traction ECU <19–8>
E 9 ENGINE CONTROL MODULE(*1)
V 8 VSV(for Waste Gate Valve)
V 4 VSV(for Exhaust Bypass Valve)
V 6 VSV (for Fuel Pressure Up)
V 5 VSV(for Exhaust Gas Control Valve)
V 7 VSV(for Intake Air Control Valve)
From A/C Amplifier<26–5>
From Cruise Control ECU<17–3>
I 1 IDLE AIR CONTROL VALVE(ISC VALVE)
V 2 VSV(for EGR)
V 3 VSV(for EVAP)
From Igniter <2–2>
From Park/Neutral Position SW (Neutral Start SW) (A/T)<1–3>
From Clutch Start SW(M/T)<1–3>
H 5 HEATED OXYGEN SENSOR (MAIN)
H11 HEATED OXYGEN SENSOR (SUB)
(SHIELDED)
(A/T)
5
6
7
8

OVERALL ELECTRICAL WIRING DIAGRAM

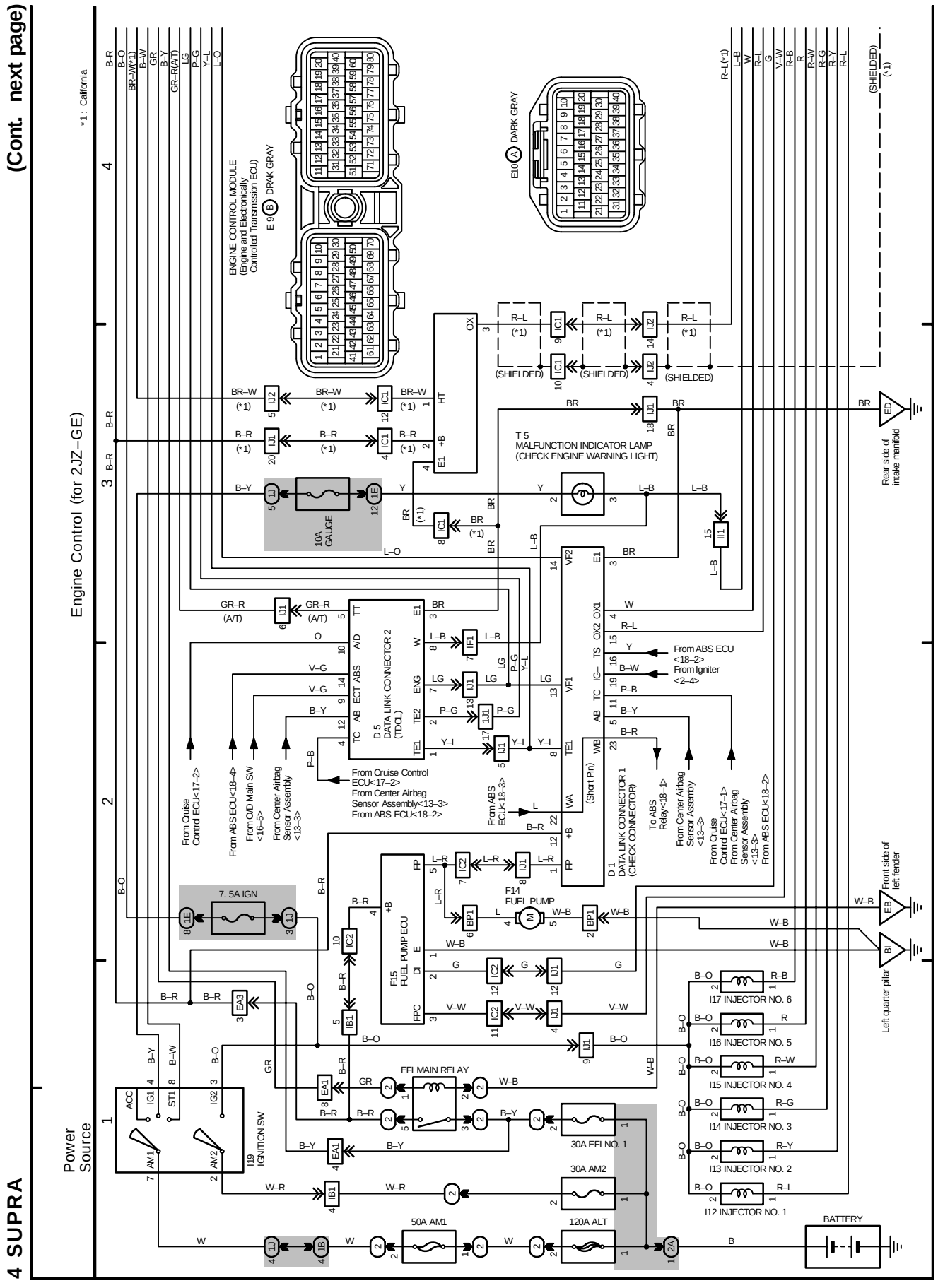

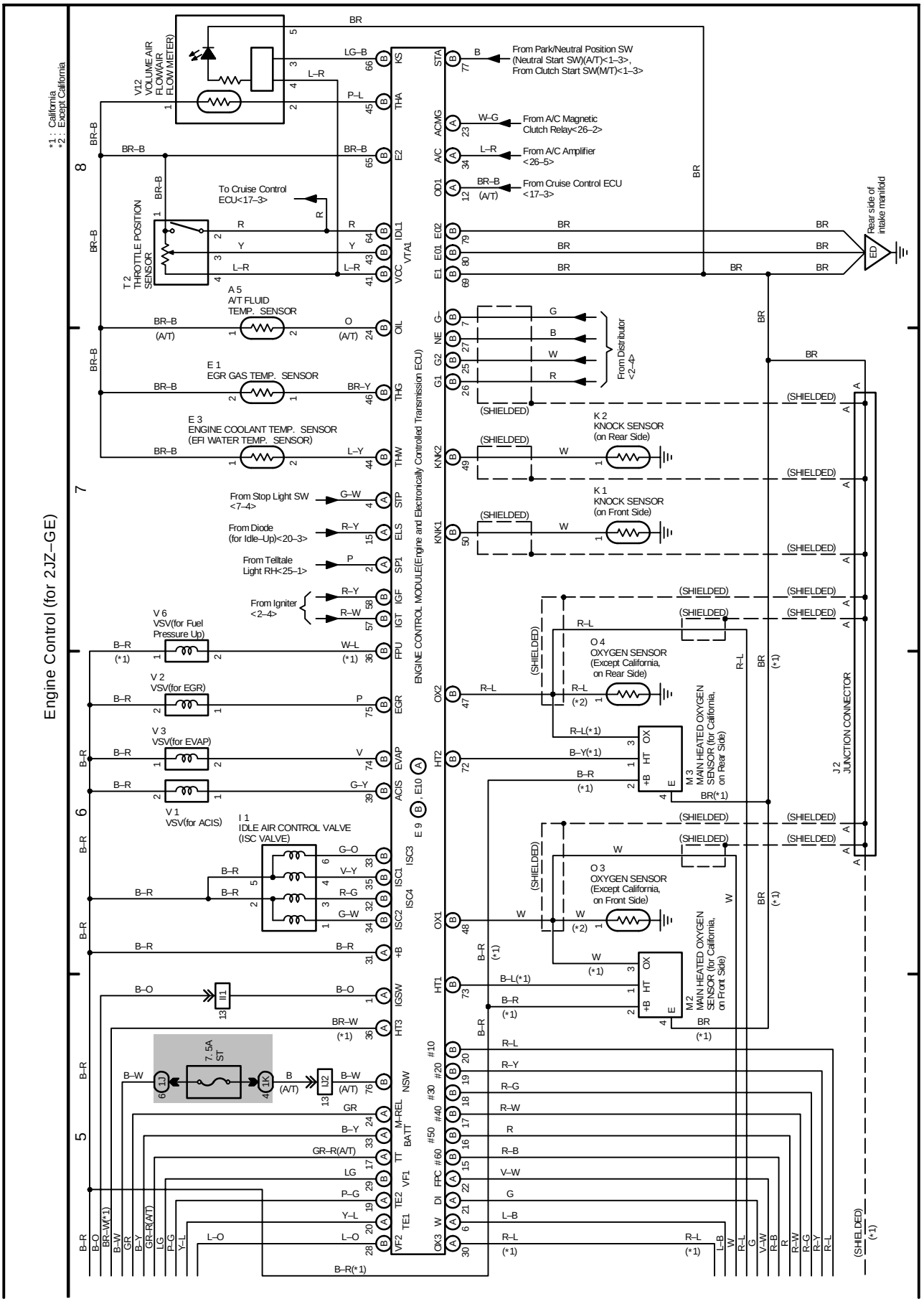
Engine Control (for 2JZ–GE)
*1 : California
*2 : Except California
ENGINE CONTROL MODULE(Engine and Electronically Controlled Transmission ECU)
V12 VOLUME AIR FLOW(AIR FLOW METER)
T 2 THROTTLE POSITION SENSOR
To Cruise Control ECU<17–3>
A 5 A/T FLUID TEMP. SENSOR
E 1 EGR GAS TEMP. SENSOR
E 3 ENGINE COOLANT TEMP. SENSOR (EFI WATER TEMP. SENSOR)
From Stop Light SW <7–4>
From Diode (for Idle–Up)<20–3>
From Telltale Light RH<25–1>
From Igniter <2–4>
V 6 VSV(for Fuel Pressure Up)
V 2 VSV(for EGR)
V 3 VSV(for EVAP)
V 1 VSV(for ACIS)
I 1 IDLE AIR CONTROL VALVE (ISC VALVE)
7. 5A ST
From Park/Neutral Position SW (Neutral Start SW)(A/T)<1–3>, From Clutch Start SW(M/T)<1–3>
From A/C Magnetic Clutch Relay<26–2>
From A/C Amplifier <26–5>
From Cruise Control ECU <17–3>
From Distributor <2–4>
K 2 KNOCK SENSOR (on Rear Side)
K 1 KNOCK SENSOR (on Front Side)
O 4 OXYGEN SENSOR (Except California, on Rear Side)
O 3 OXYGEN SENSOR (Except California, on Front Side)
M 3 MAIN HEATED OXYGEN SENSOR (for California, on Rear Side)
M 2 MAIN HEATED OXYGEN SENSOR (for California, on Front Side)
J 2 JUNCTION CONNECTOR
Rear side of intake manifold
(SHIELDED)

OVERALL ELECTRICAL WIRING DIAGRAM

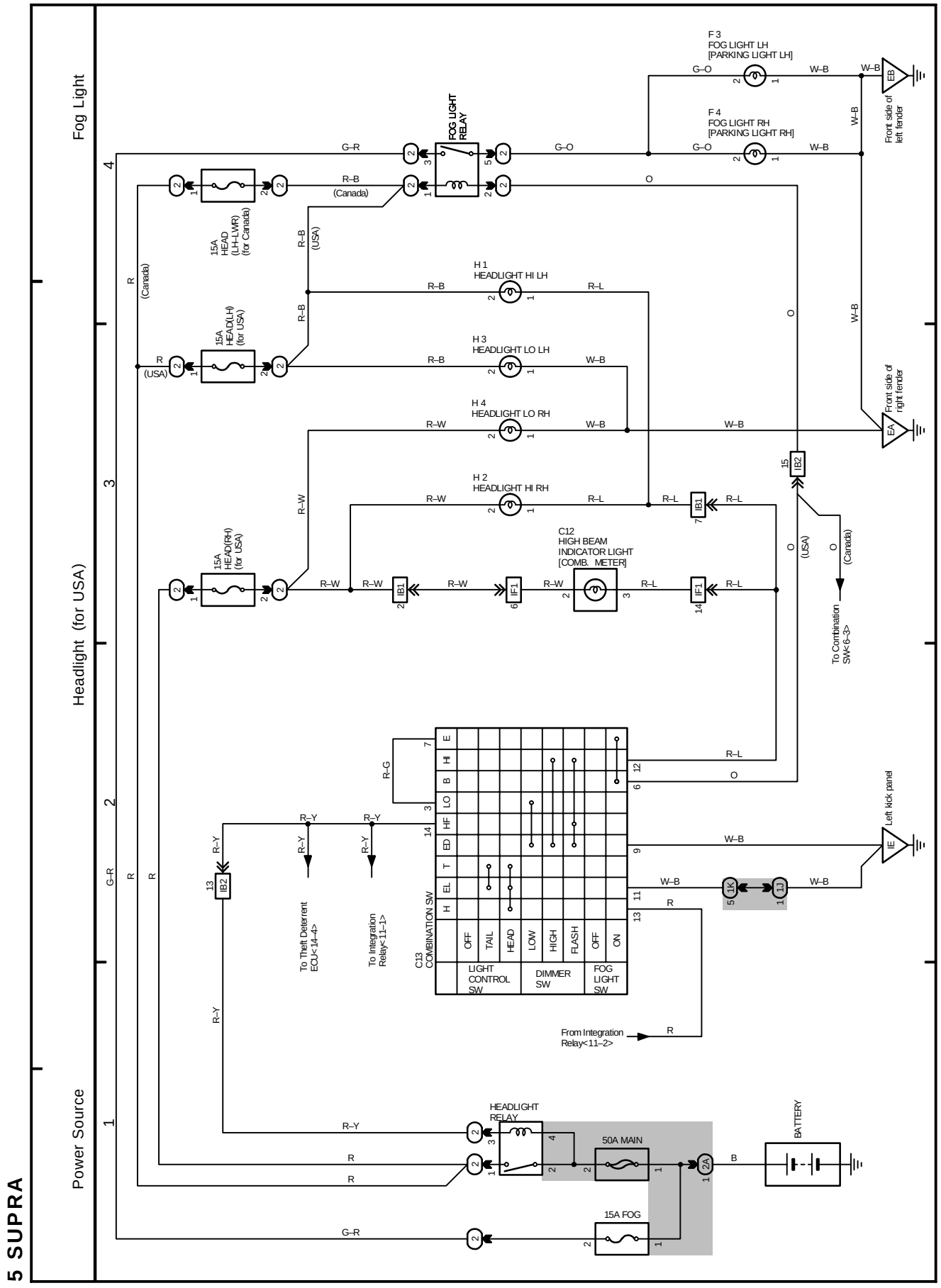

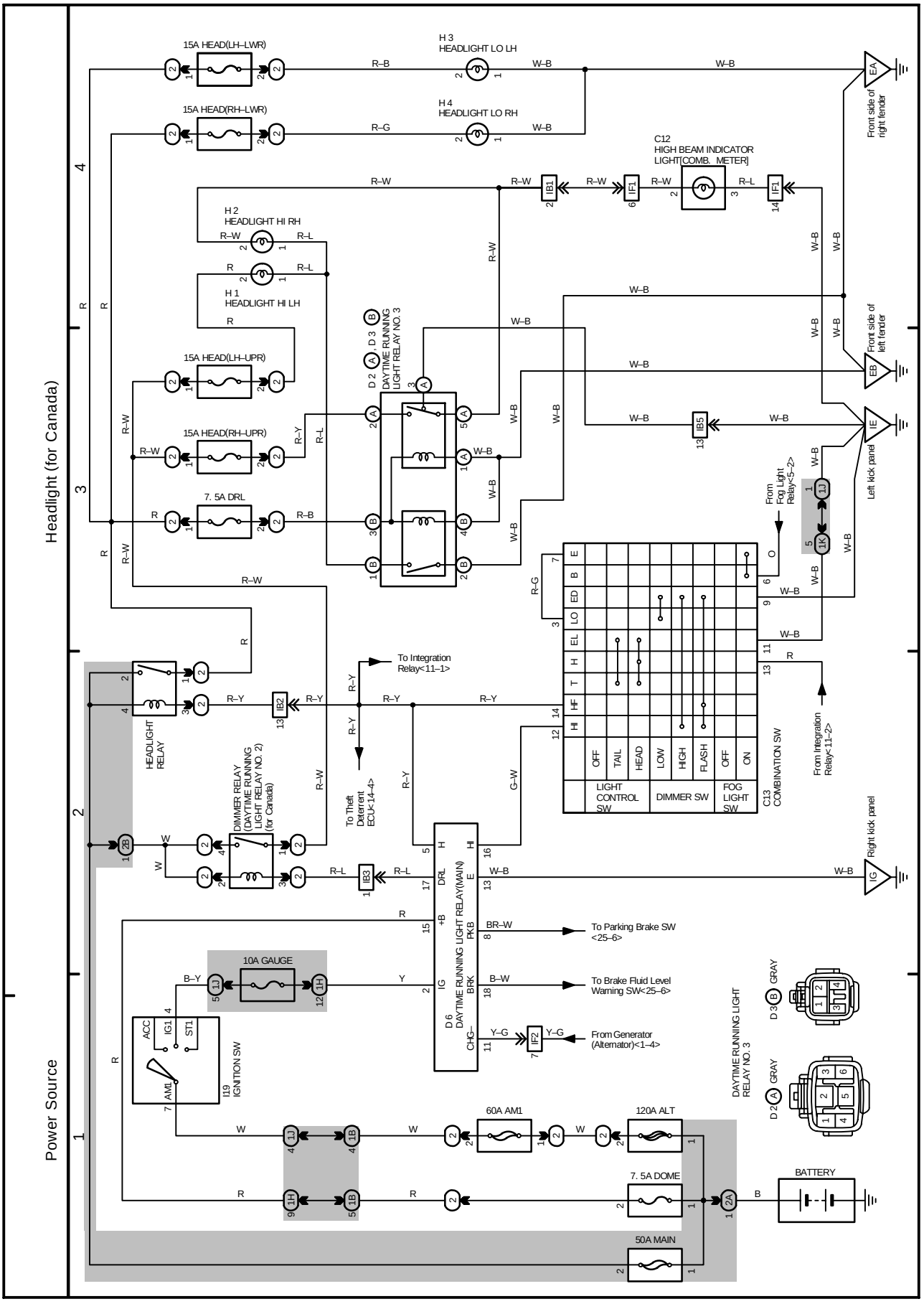
Headlight (for Canada)
Power Source
15A HEAD(LH–LWR)
15A HEAD(RH–LWR)
15A HEAD(LH–UPR)
15A HEAD(RH–UPR)
7. 5A DRL
H 1 HEADLIGHT HI LH
H 2 HEADLIGHT HI RH
H 3 HEADLIGHT LO LH
H 4 HEADLIGHT LO RH
C12 HIGH BEAM INDICATOR LIGHT[COMB. METER]
D 2 D 3 DAYTIME RUNNING LIGHT RELAY NO. 3
HEADLIGHT RELAY
DIMMER RELAY (DAYTIME RUNNING LIGHT RELAY NO. 2) (for Canada)
D 6 DAYTIME RUNNING LIGHT RELAY(MAIN)
I19 IGNITION SW
10A GAUGE
60A AM1
120A ALT
7. 5A DOME
50A MAIN
BATTERY
C13 COMBINATION SW
LIGHT CONTROL SW
DIMMER SW
FOG LIGHT SW
To Integration Relay<11–1>
To Theft Deterrent ECU<14–4>
From Integration Relay<11–2>
From Fog Light Relay<5–2>
To Parking Brake SW <25–6>
To Brake Fluid Level Warning SW<25–6>
From Generator (Alternator)<1–4>
Front side of right fender
Front side of left fender
Left kick panel
Right kick panel
DAYTIME RUNNING LIGHT RELAY NO. 3

OVERALL ELECTRICAL WIRING DIAGRAM

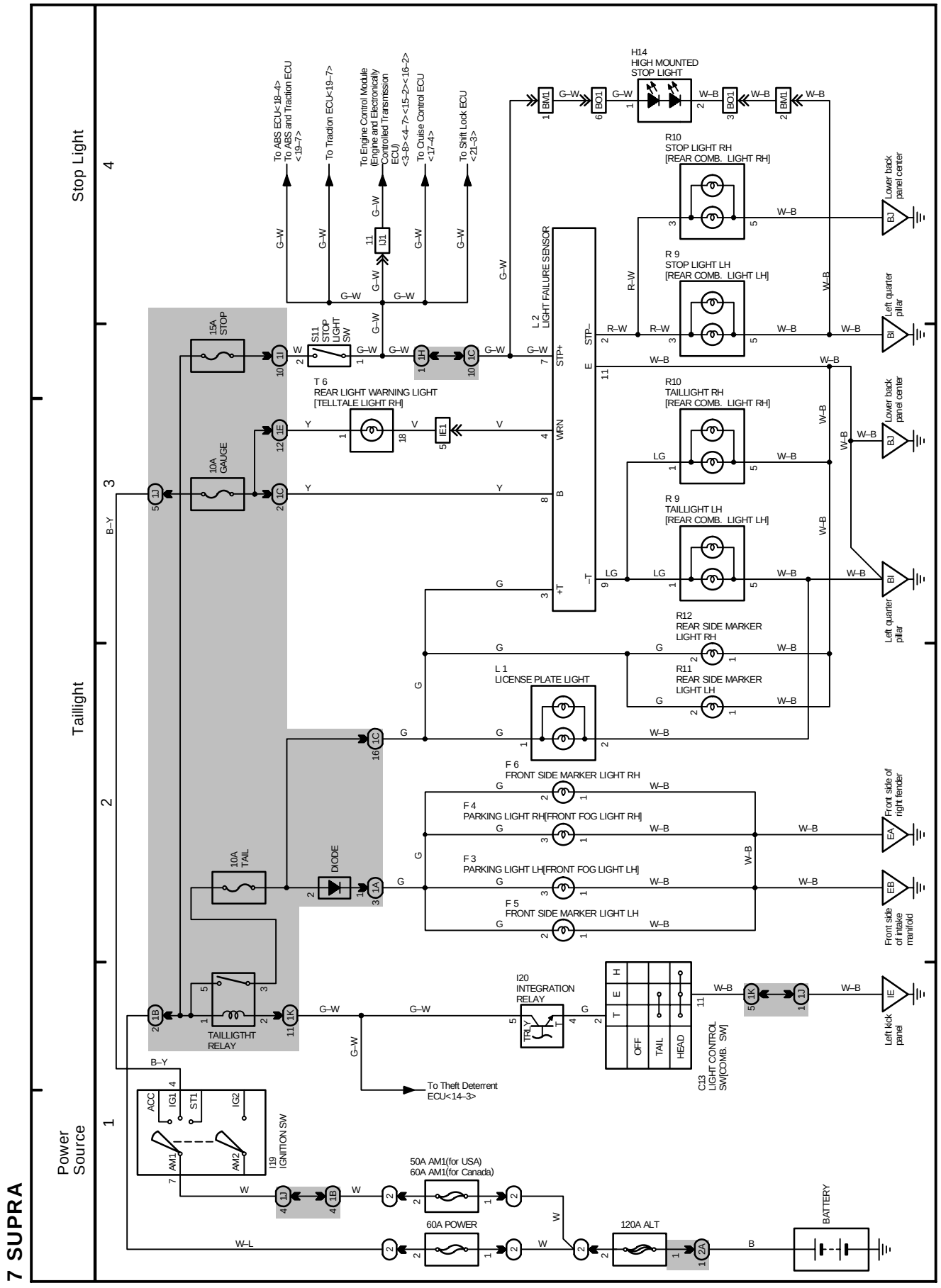

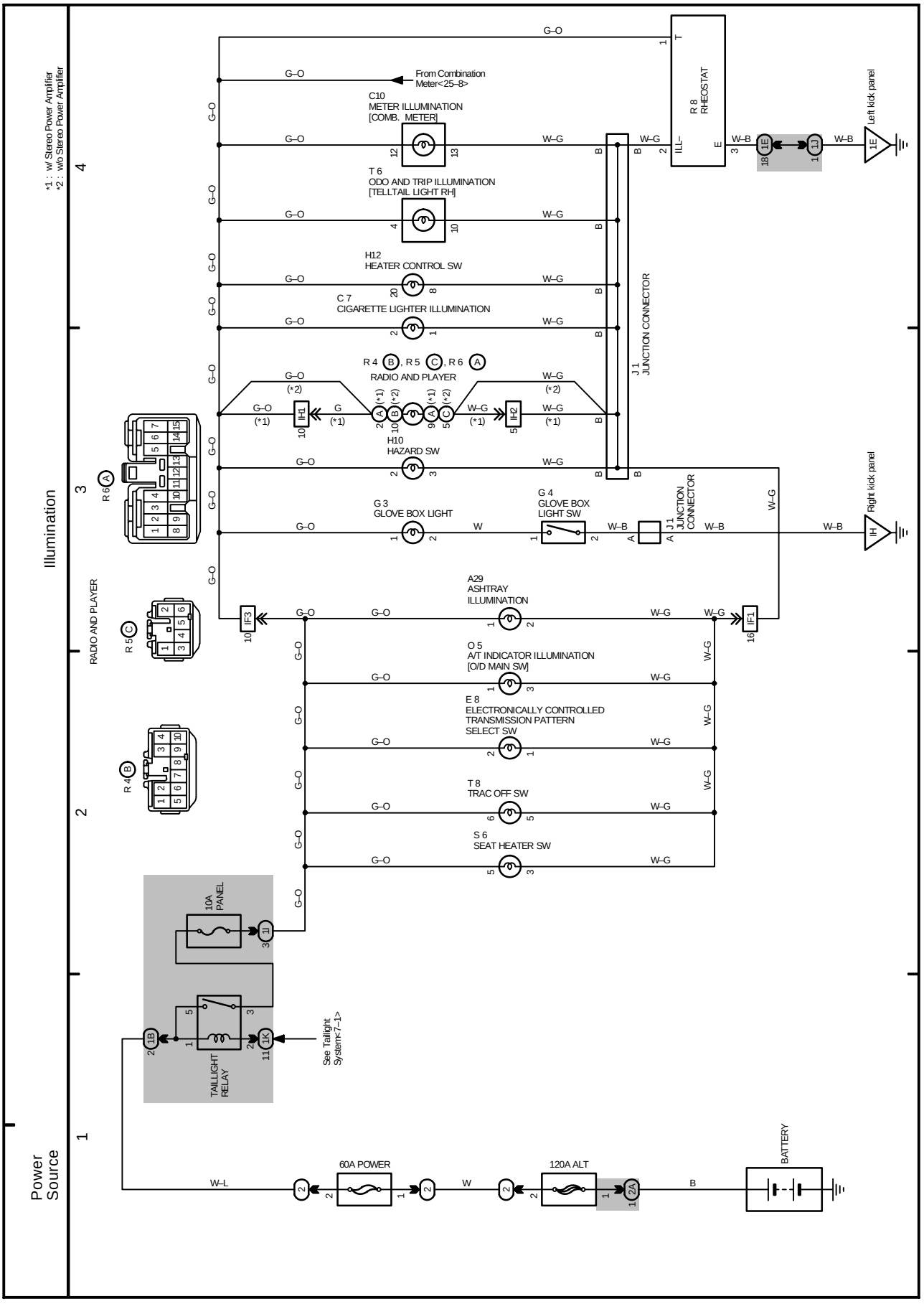
Power Source
Illumination
*1 : w/ Stereo Power Amplifier
*2 : w/o Stereo Power Amplifier
From Combination Meter<25–8>
C10 METER ILLUMINATION [COMB. METER]
T 6 ODO AND TRIP ILLUMINATION [TELLTAIL LIGHT RH]
H12 HEATER CONTROL SW
C 7 CIGARETTE LIGHTER ILLUMINATION
R 4 B , R 5 C , R 6 A RADIO AND PLAYER
H10 HAZARD SW
G 3 GLOVE BOX LIGHT
G 4 GLOVE BOX LIGHT SW
A29 ASHTRAY ILLUMINATION
O 5 A/T INDICATOR ILLUMINATION [O/D MAIN SW]
E 8 ELECTRONICALLY CONTROLLED TRANSMISSION PATTERN SELECT SW
T 8 TRAC OFF SW
S 6 SEAT HEATER SW
R 8 RHEOSTAT
J1 JUNCTION CONNECTOR
Left kick panel
Right kick panel
RADIO AND PLAYER
10A PANEL
TAILLIGHT RELAY
See Taillight System<7–1>
60A POWER
120A ALT
BATTERY

OVERALL ELECTRICAL WIRING DIAGRAM

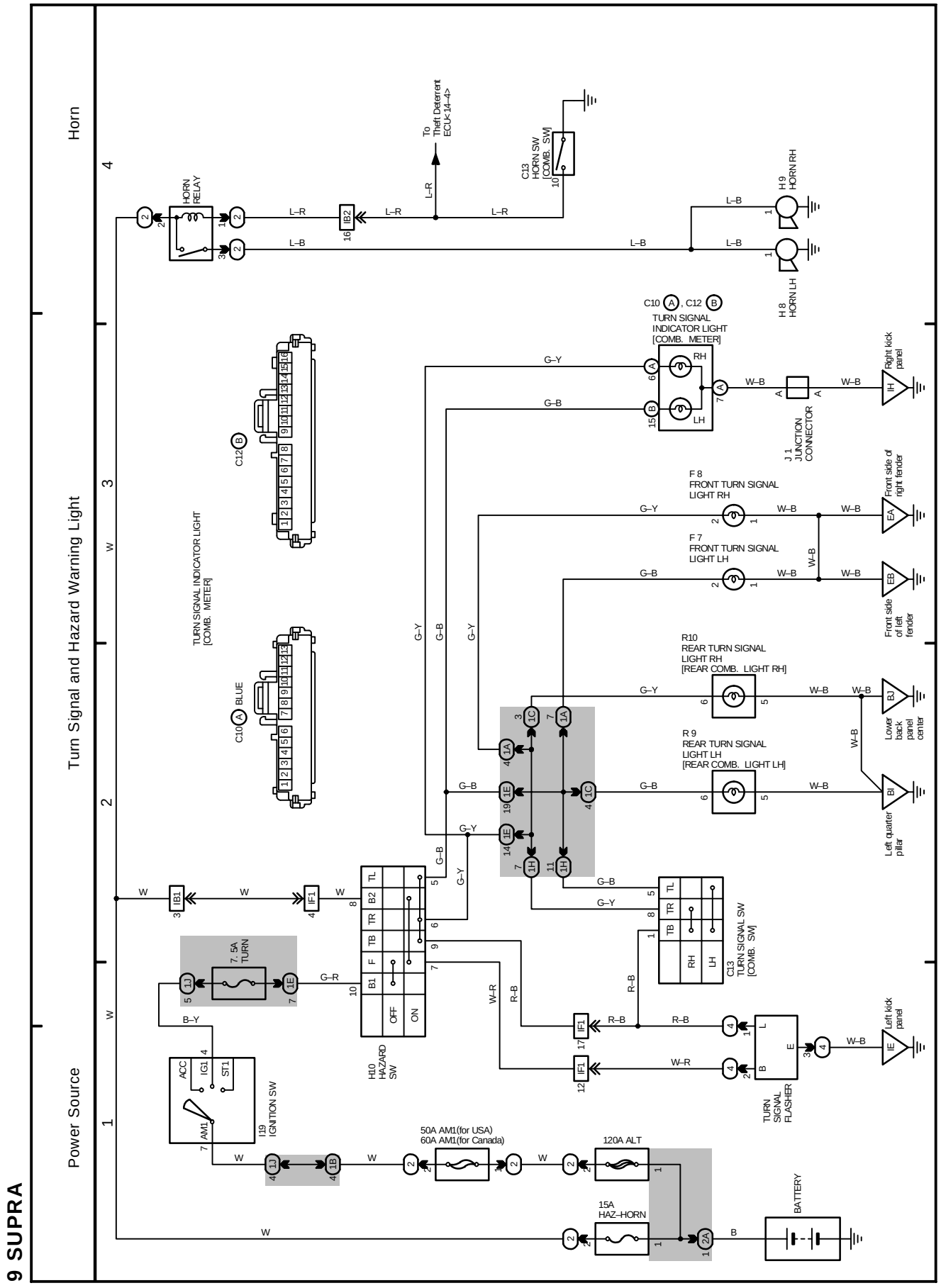

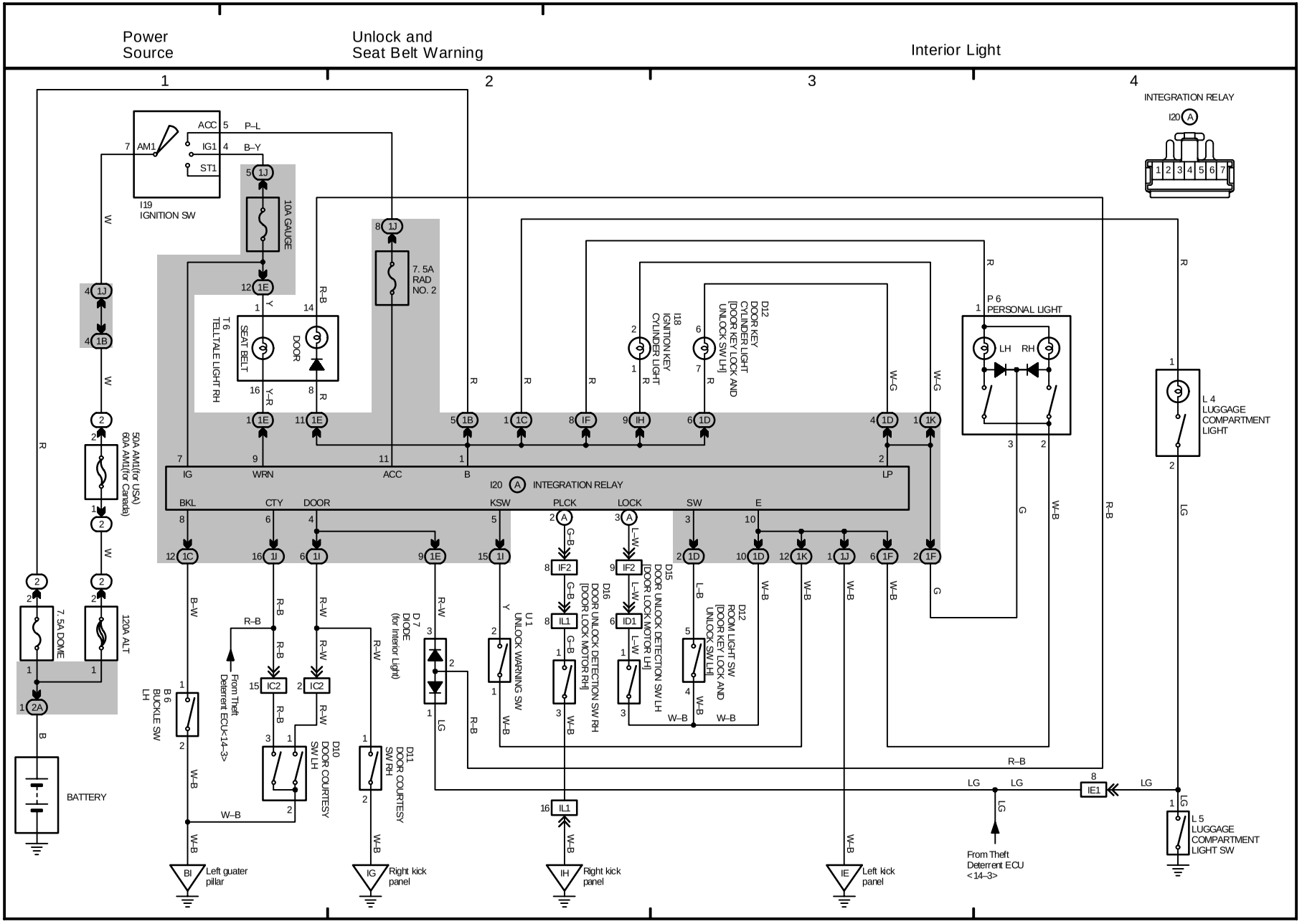
Power Source
Unlock and Seat Belt Warning
Interior Light
1
2
3
4
INTEGRATION RELAY
I20 A
I19 IGNITION SW
ACC
IG1
ST1
AM1
10A GAUGE
7. 5A RAD NO. 2
T 6 TELLTALE LIGHT RH
SEAT BELT
DOOR
I18 IGNITION KEY CYLINDER LIGHT
D12 DOOR KEY CYLINDER LIGHT [DOOR KEY LOCK AND UNLOCK SW LH]
P 6 PERSONAL LIGHT
LH
RH
L 4 LUGGAGE COMPARTMENT LIGHT
50A AM1(for USA) 60A AM1(for Canada)
7. 5A DOME
120A ALT
BATTERY
IG
WRN
ACC
B
LP
BKL
CTY
DOOR
KSW
PLCK
LOCK
SW
E
B 6 BUCKLE SW LH
From Theft Deterrent ECU<14-3>
D10 DOOR COURTESY SW LH
D11 DOOR COURTESY SW RH
D7 DIODE (for Interior Light)
U1 UNLOCK WARNING SW
D16 DOOR UNLOCK DETECTION SW RH [DOOR LOCK MOTOR RH]
D15 DOOR UNLOCK DETECTION SW LH [DOOR LOCK MOTOR LH]
D12 ROOM LIGHT SW [DOOR KEY LOCK AND UNLOCK SW LH]
L 5 LUGGAGE COMPARTMENT LIGHT SW
From Theft Deterrent ECU <14-3>
BI Left guater pillar
IG Right kick panel
IH Right kick panel
IE Left kick panel

OVERALL ELECTRICAL WIRING DIAGRAM

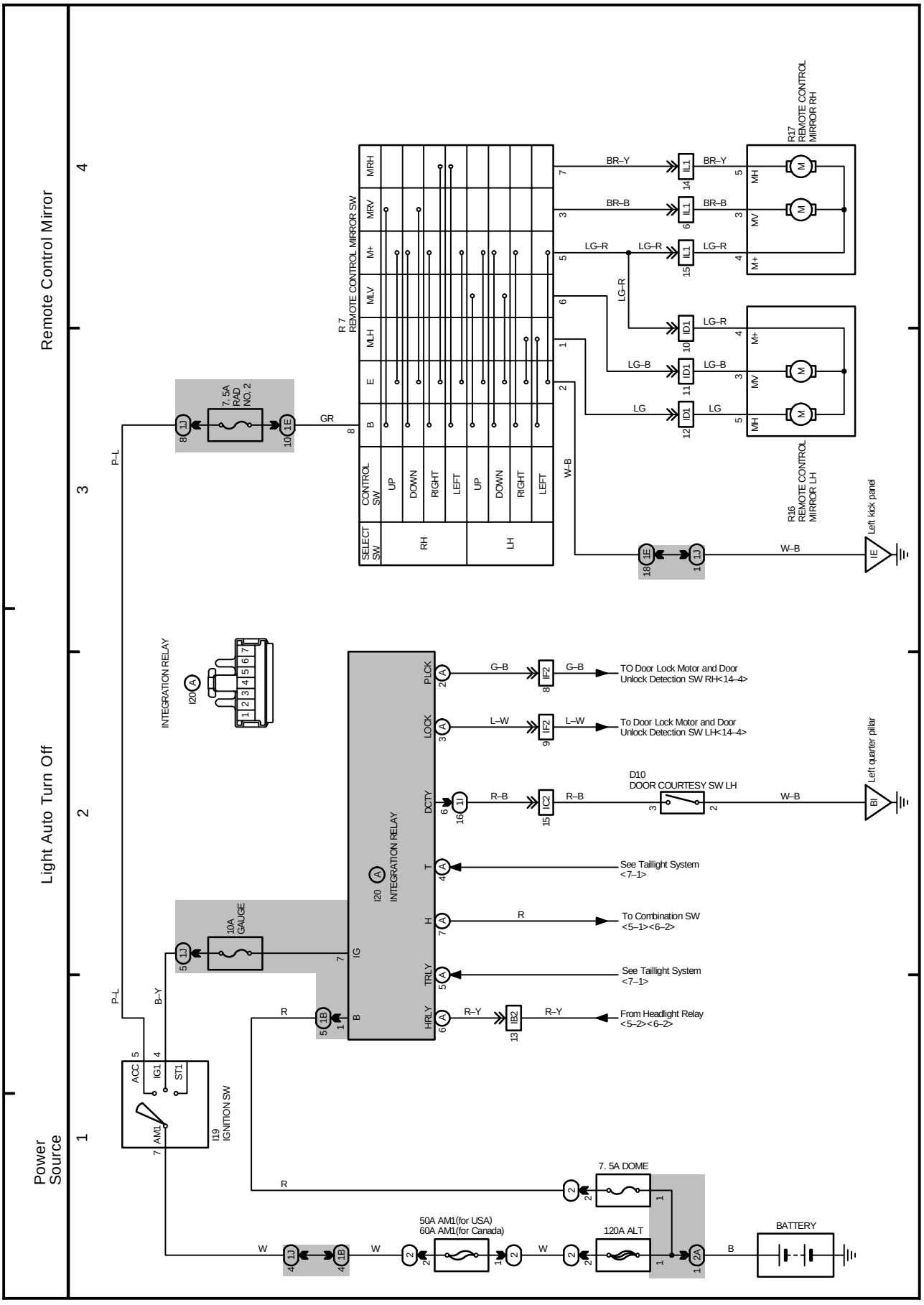

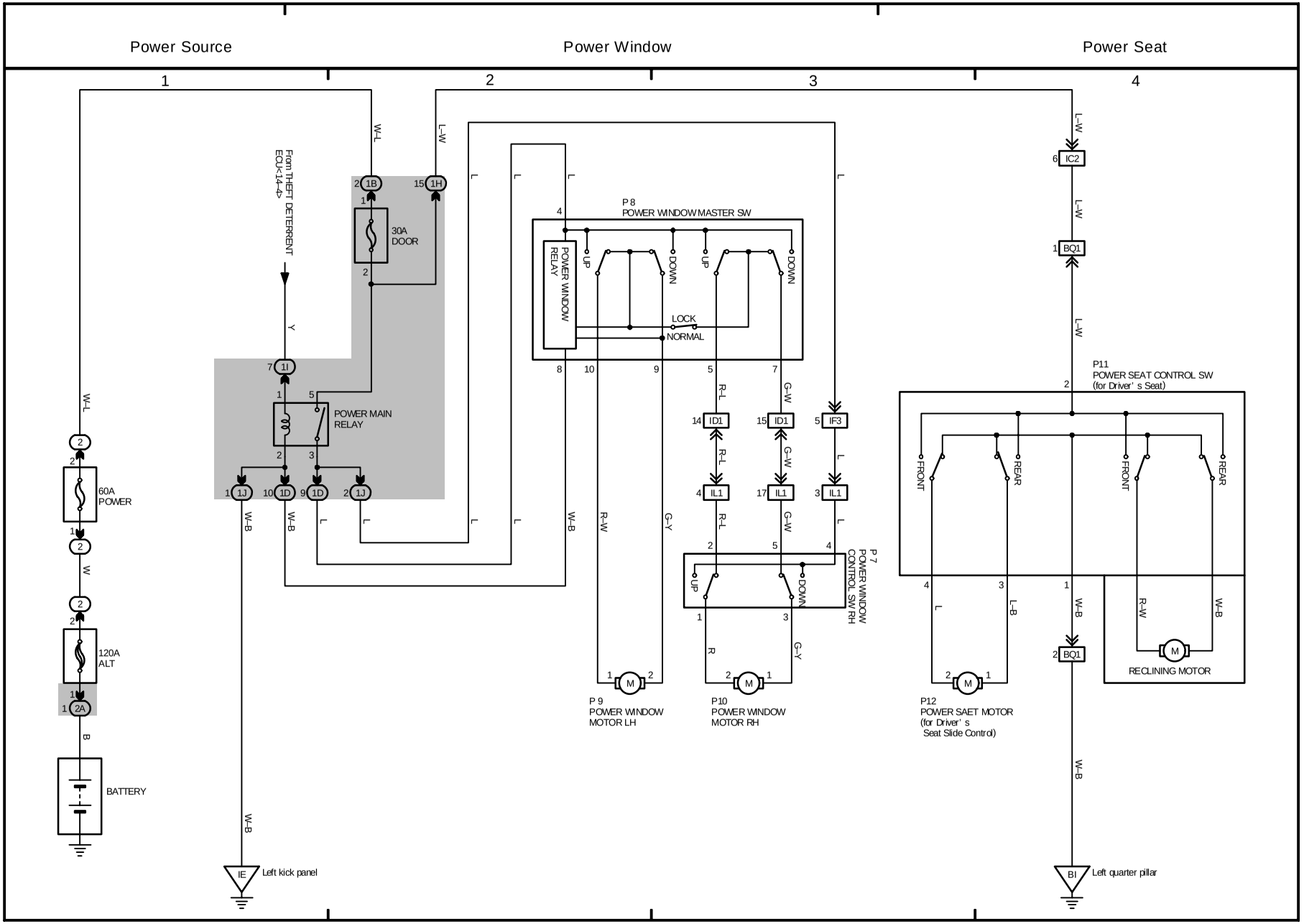
Power Source
Power Window
Power Seat
1
2
3
4
From THEFT DETERRENT ECU<14-4>
30A DOOR
POWER MAIN RELAY
60A POWER
120A ALT
BATTERY
Left kick panel
P 8
POWER WINDOW MASTER SW
POWER WINDOW RELAY
UP
DOWN
LOCK
NORMAL
P 9
POWER WINDOW MOTOR LH
P10
POWER WINDOW MOTOR RH
P 7
POWER WINDOW CONTROL SW RH
P11
POWER SEAT CONTROL SW (for Driver's Seat)
FRONT
REAR
RECLINING MOTOR
P12
POWER SAET MOTOR (for Driver's Seat Slide Control)
Left quarter pillar

OVERALL ELECTRICAL WIRING DIAGRAM

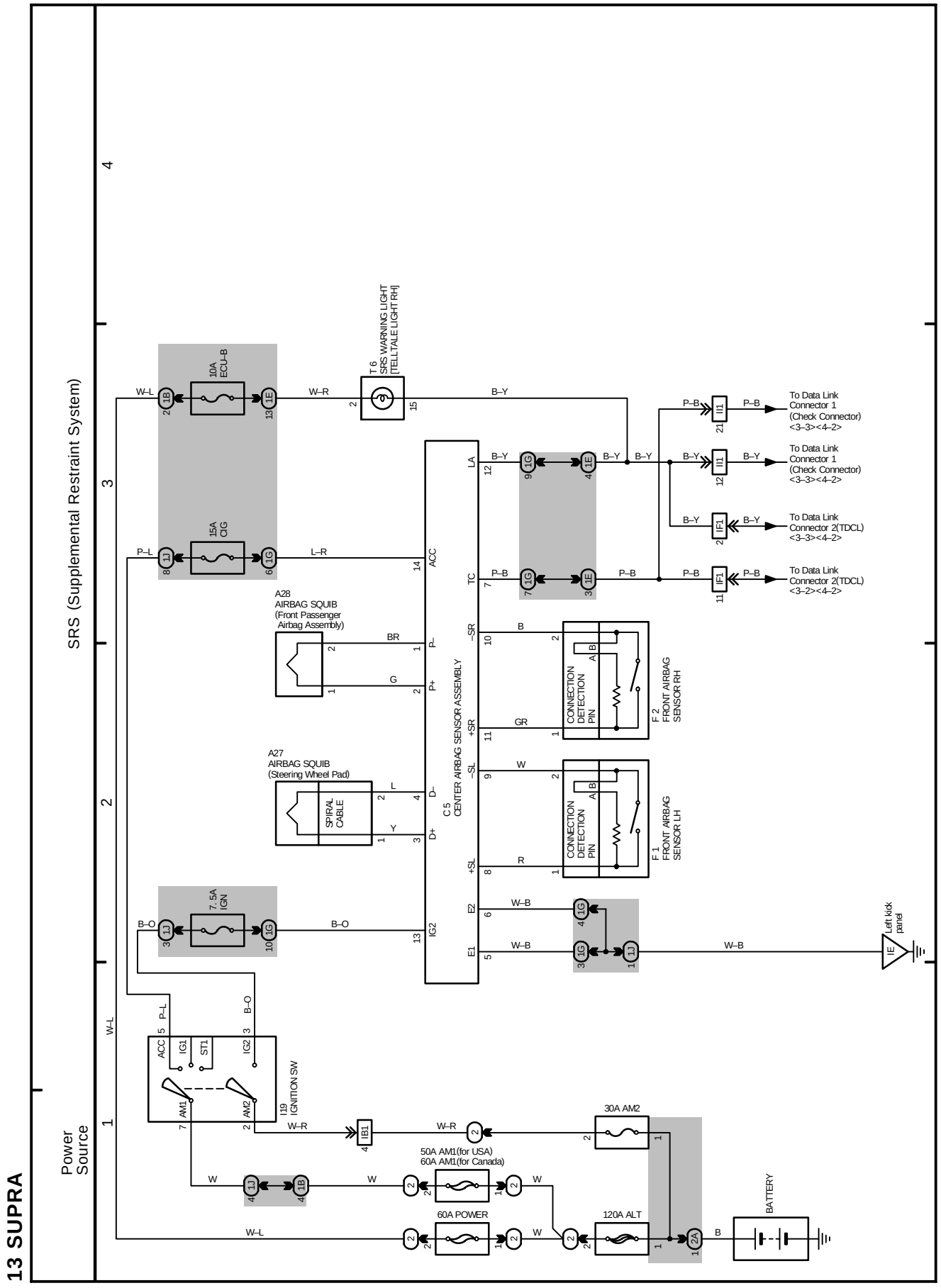

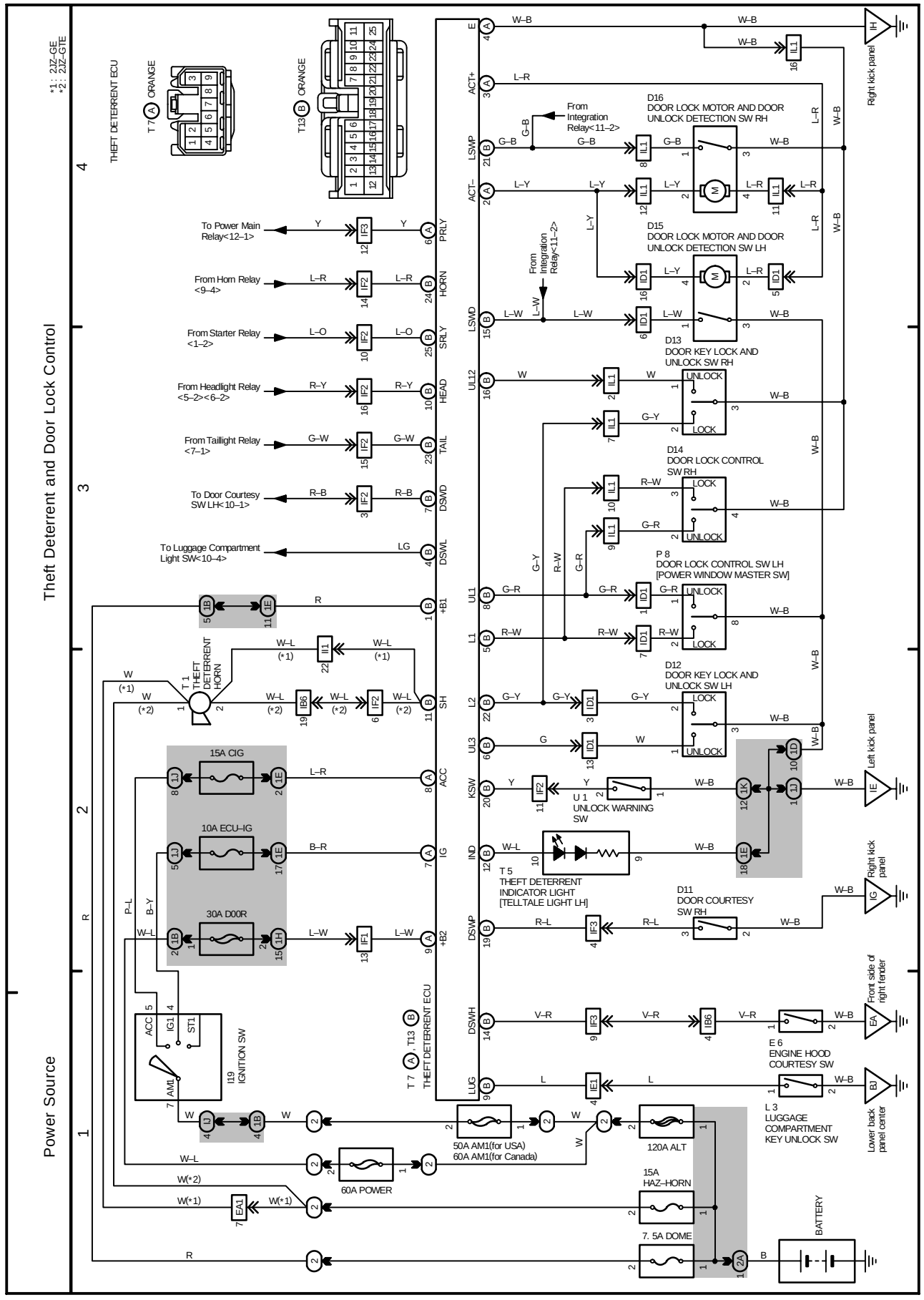
Power Source
Theft Deterrent and Door Lock Control
*1: 2JZ–GE
*2: 2JZ–GTE
THEFT DETERRENT ECU
T 7 (A) ORANGE
T13 (B) ORANGE
To Power Main Relay<12–1>
From Horn Relay <9–4>
From Starter Relay <1–2>
From Headlight Relay <5–2><6–2>
From Taillight Relay <7–1>
To Door Courtesy SW LH<10–1>
To Luggage Compartment Light SW<10–4>
From Integration Relay<11–2>
D16 DOOR LOCK MOTOR AND DOOR UNLOCK DETECTION SW RH
D15 DOOR LOCK MOTOR AND DOOR UNLOCK DETECTION SW LH
D13 DOOR KEY LOCK AND UNLOCK SW RH
D14 DOOR LOCK CONTROL SW RH
P 8 DOOR LOCK CONTROL SW LH [POWER WINDOW MASTER SW]
D12 DOOR KEY LOCK AND UNLOCK SW LH
D11 DOOR COURTESY SW RH
T 1 THEFT DETERRENT HORN
15A CIG
10A ECU–IG
30A D00R
I19 IGNITION SW
50A AM1(for USA) 60A AM1(for Canada)
120A ALT
60A POWER
15A HAZ–HORN
7. 5A DOME
BATTERY
U 1 UNLOCK WARNING SW
T 5 THEFT DETERRENT INDICATOR LIGHT [TELLTALE LIGHT LH]
E 6 ENGINE HOOD COURTESY SW
L 3 LUGGAGE COMPARTMENT KEY UNLOCK SW
Right kick panel
Left kick panel
Front side of right fender
Lower back panel center

OVERALL ELECTRICAL WIRING DIAGRAM

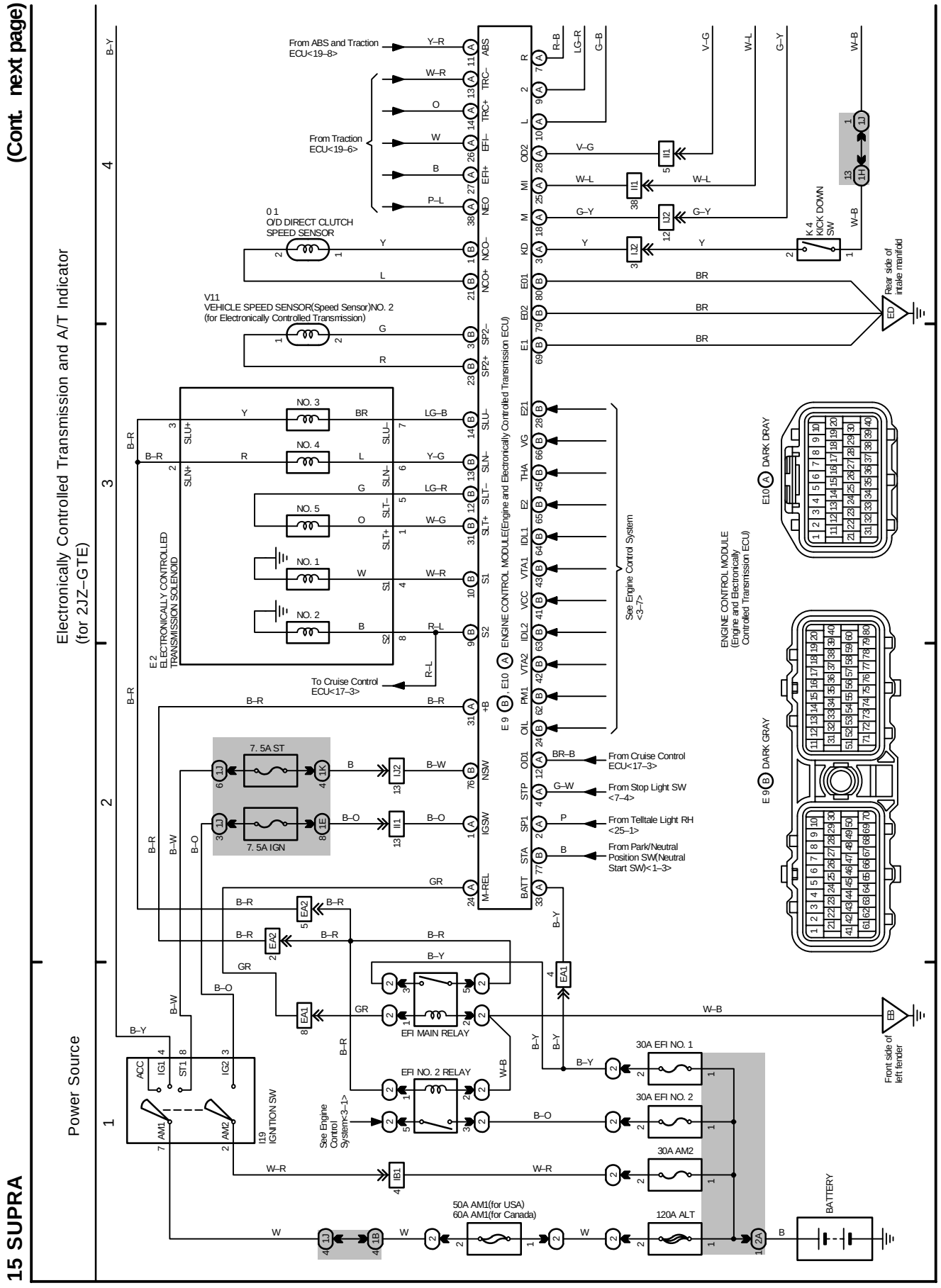

15 SUPRA (Cont' d)

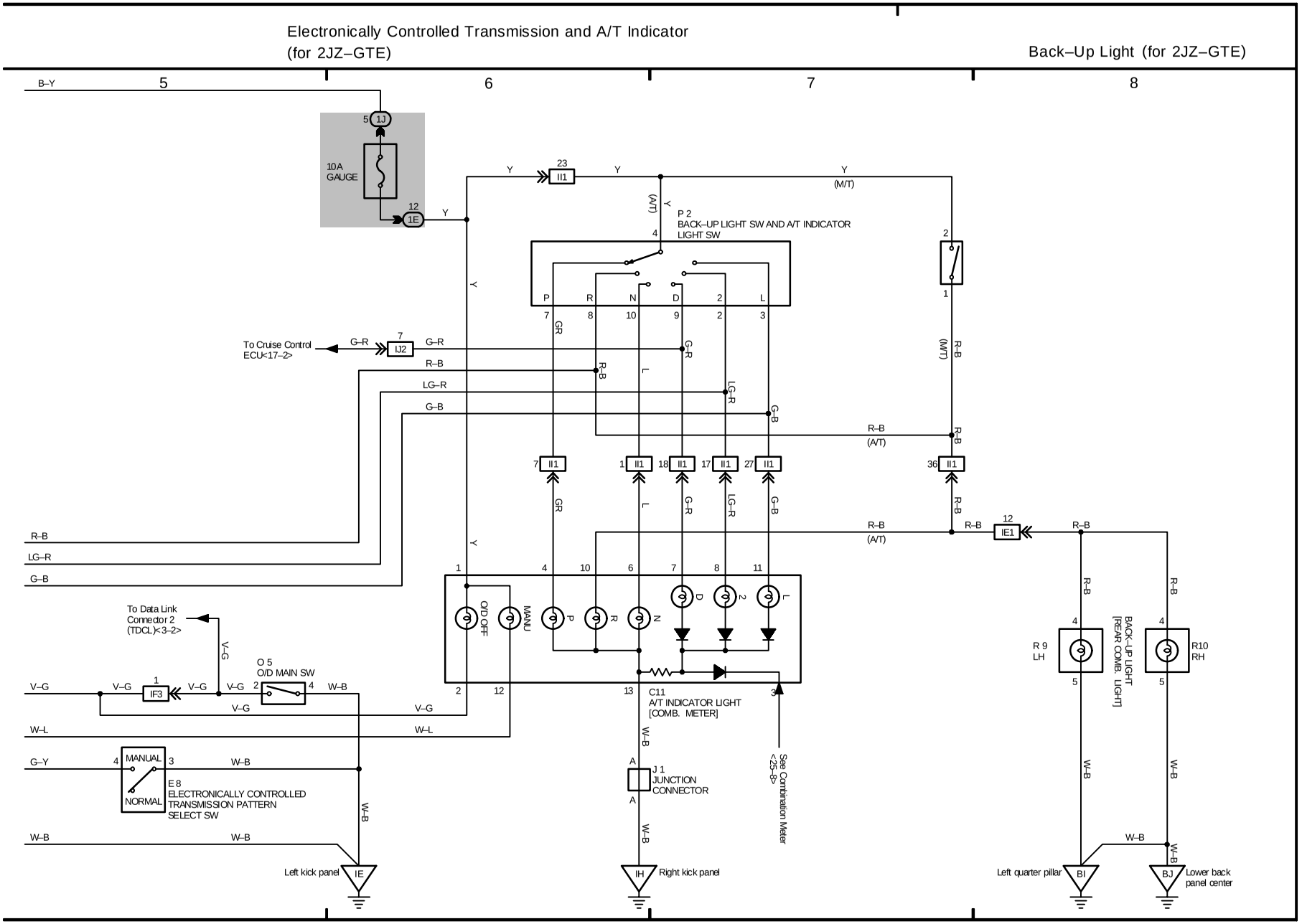

OVERALL ELECTRICAL WIRING DIAGRAM

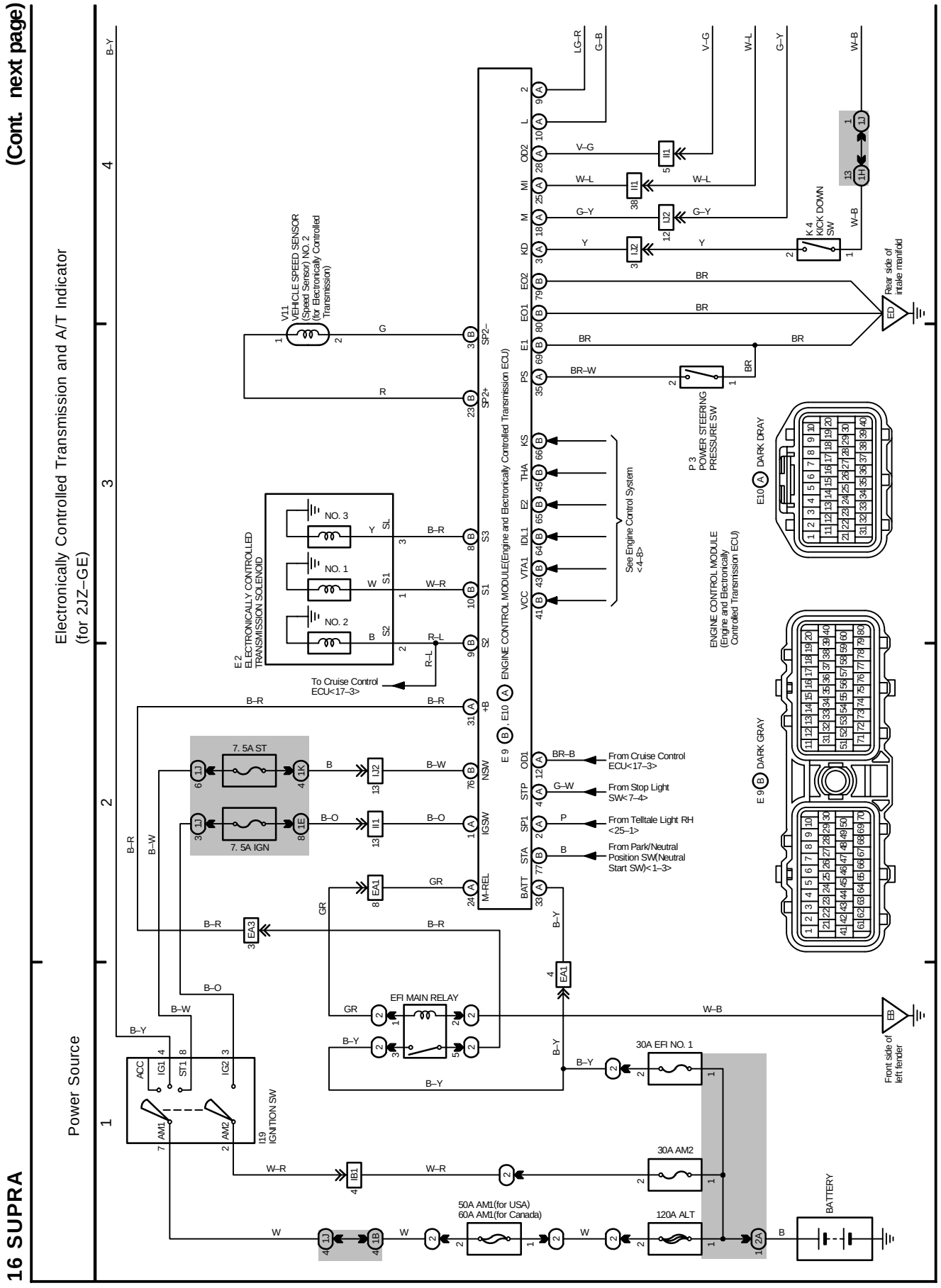

Electronically Controlled Transmission and A/T Indicator (for 2JZ–GE)

Back–Up Light (for 2JZ–GE)

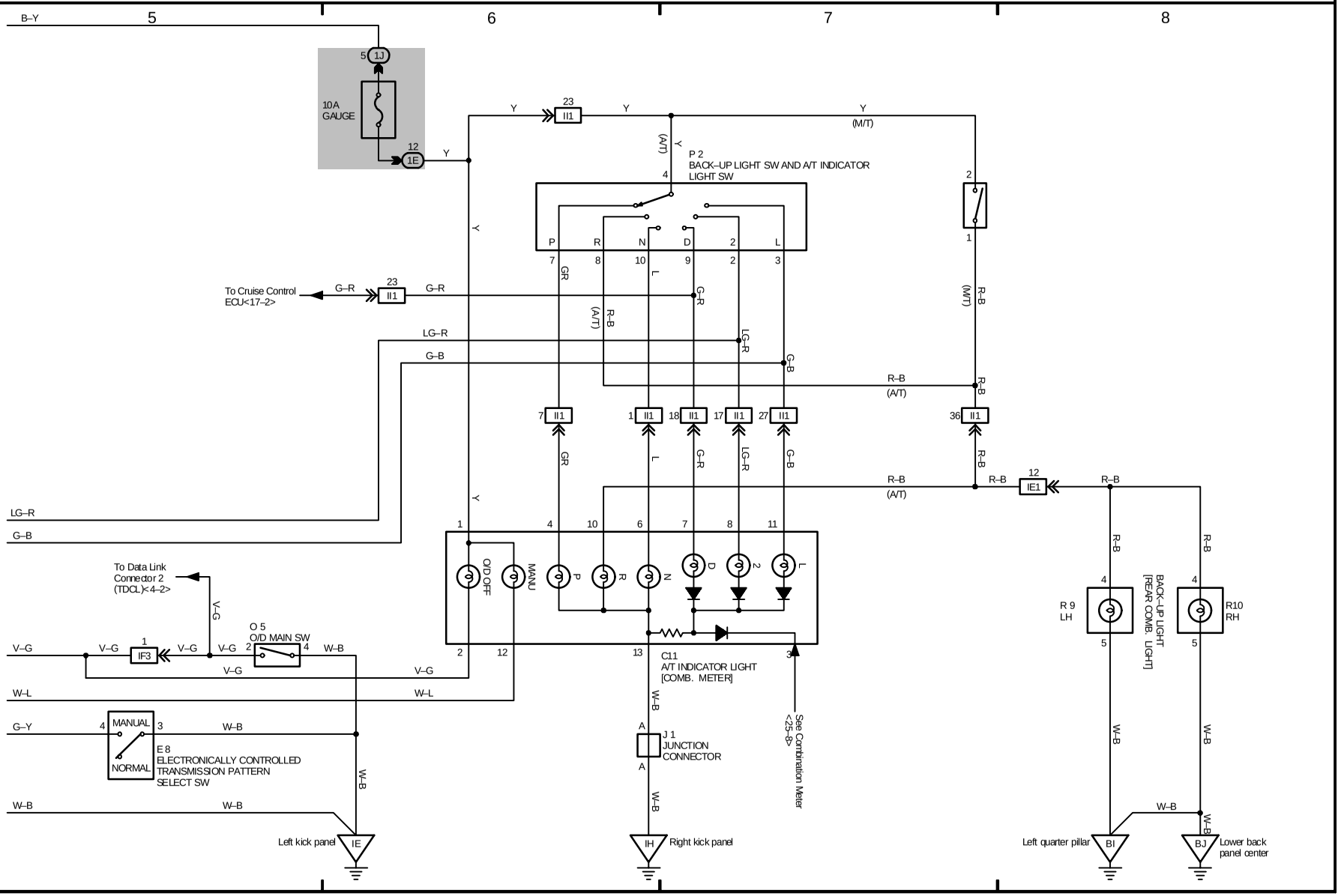

OVERALL ELECTRICAL WIRING DIAGRAM

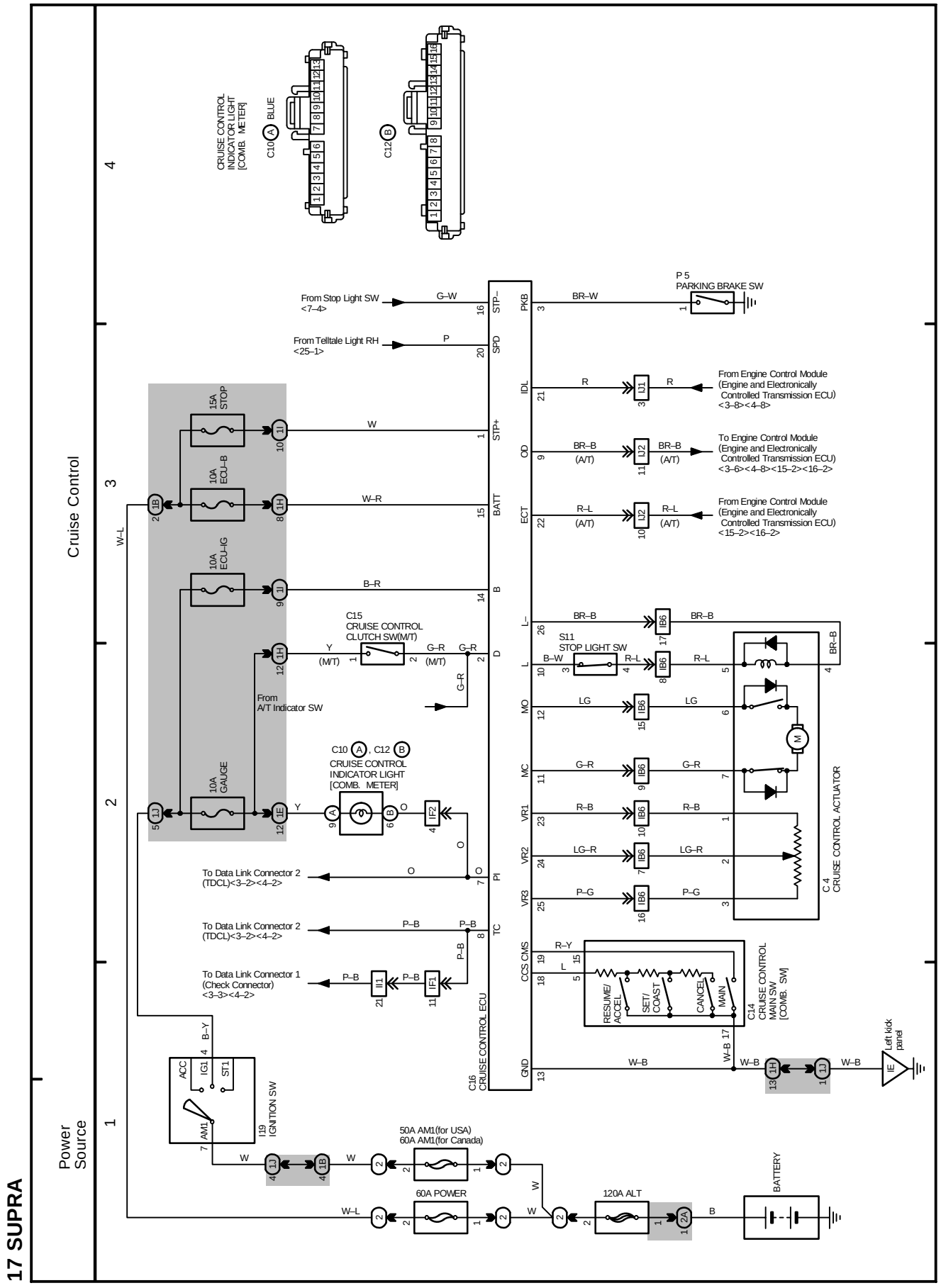

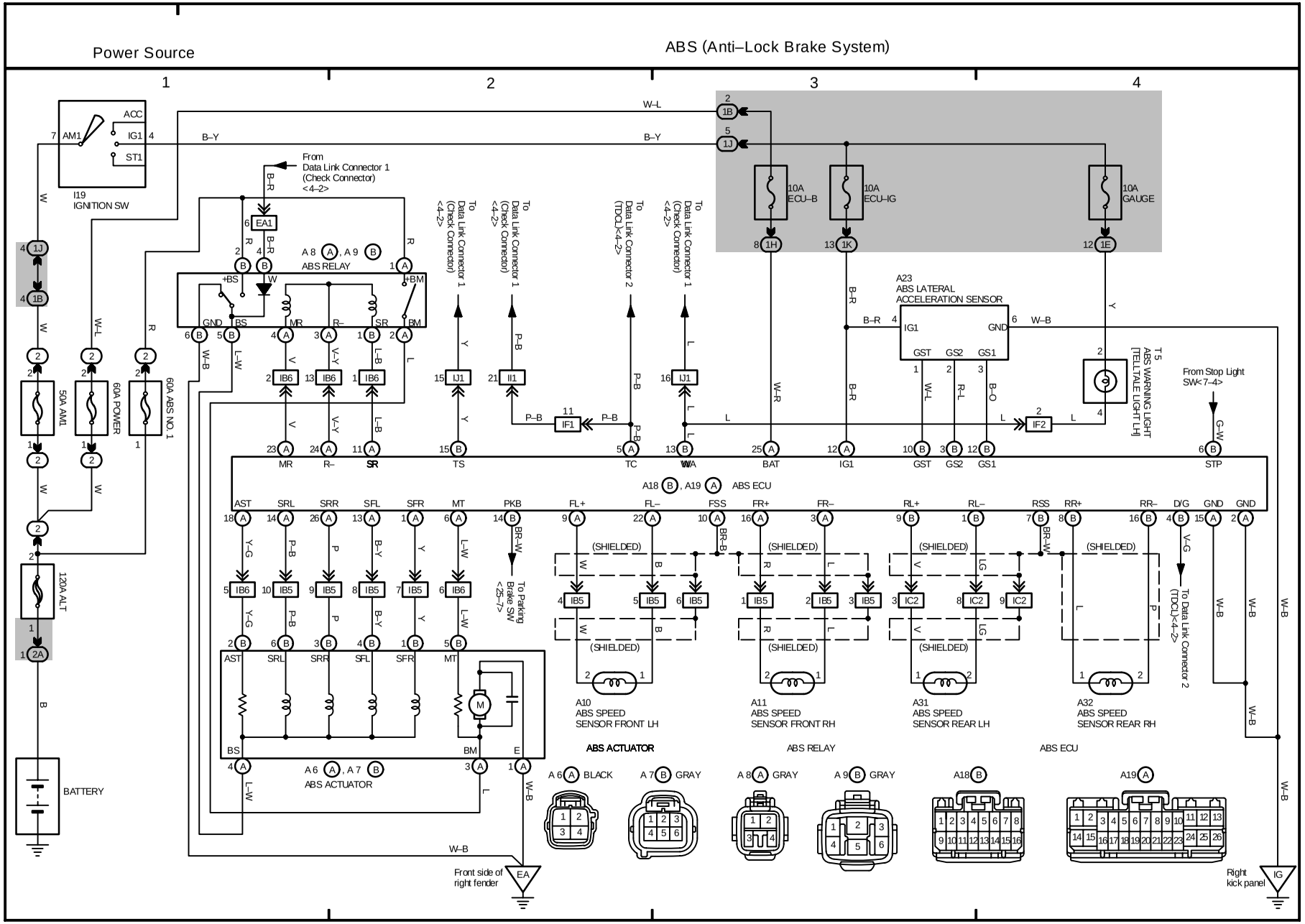
Power Source
ABS (Anti–Lock Brake System)
1
2
3
4
I19
IGNITION SW
ACC
AM1
IG1
ST1
BATTERY
50A AM1
60A POWER
60A ABS NO. 1
120A ALT
10A
ECU–B
10A
ECU–IG
10A
GAUGE
ABS RELAY
A 8 , A 9
From
Data Link Connector 1
(Check Connector)
<4–2>
To
Data Link Connector 1
(Check Connector)
<4–2>
To
Data Link Connector 2
(TDCL)<4–2>
A23
ABS LATERAL
ACCELERATION SENSOR
IG1
GND
GST
GS2
GS1
T5
ABS WARNING LIGHT
[TELLTALE LIGHT LH]
From Stop Light
SW<7–4>
MR
R–
SR
TS
TC
BAT
IG1
GST
GS2
GS1
STP
A18 , A19
ABS ECU
AST
SRL
SRR
SFL
SFR
MT
PKB
FL+
FL–
FSS
FR+
FR–
RL+
RL–
RSS
RR+
RR–
D/G
GND
GND
To Parking
Brake SW
<25–7>
To Data Link Connector 2
(TDCL)<4–2>
(SHIELDED)
A10
ABS SPEED
SENSOR FRONT LH
A11
ABS SPEED
SENSOR FRONT RH
A31
ABS SPEED
SENSOR REAR LH
A32
ABS SPEED
SENSOR REAR RH
ABS ACTUATOR
A 6 , A 7
ABS ACTUATOR
BS
BM
E
A 6 BLACK
A 7 GRAY
A 8 GRAY
A 9 GRAY
A18
A19
ABS RELAY
ABS ECU
Front side of
right fender
Right
kick panel
EA
IG

OVERALL ELECTRICAL WIRING DIAGRAM

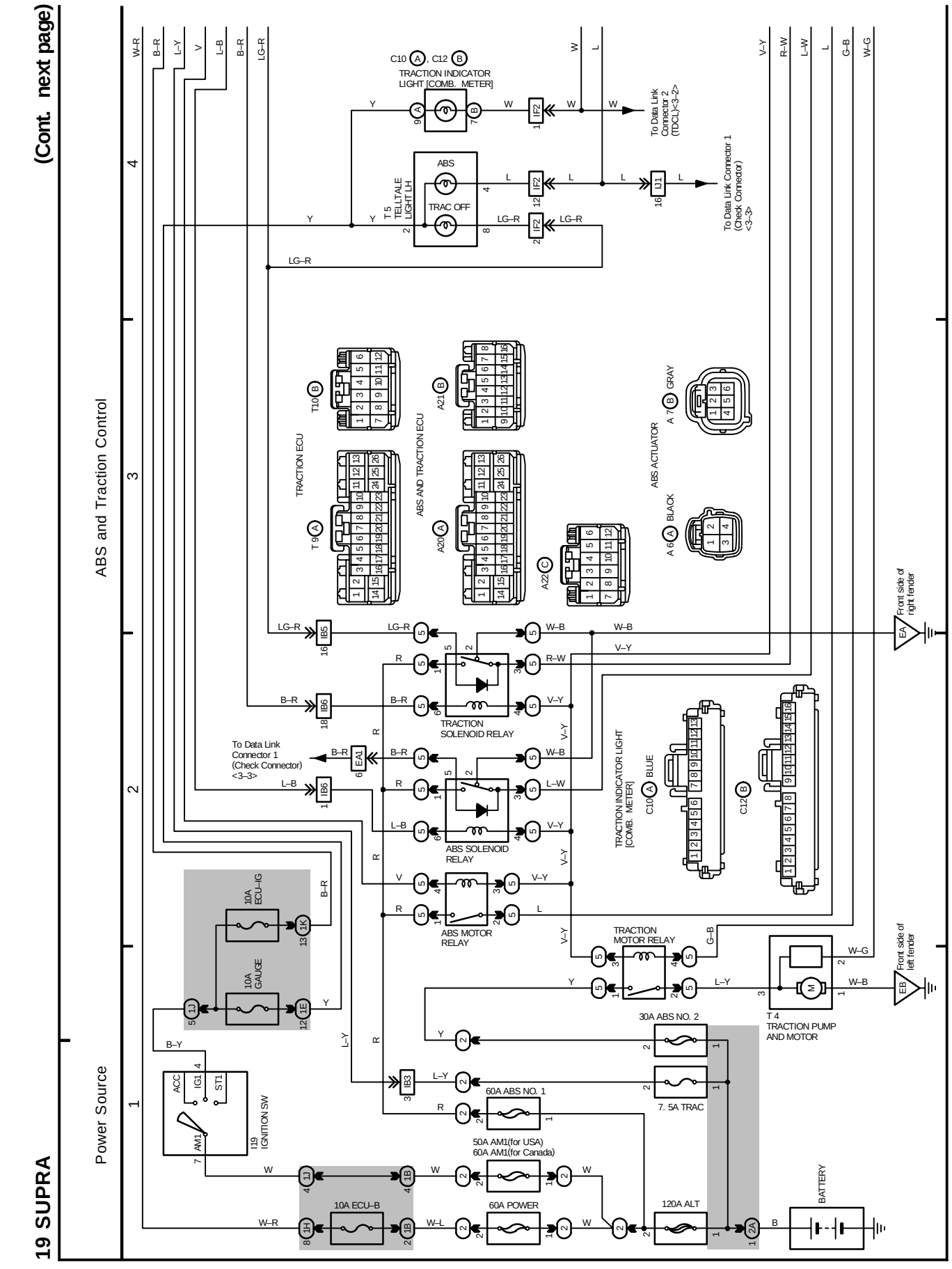

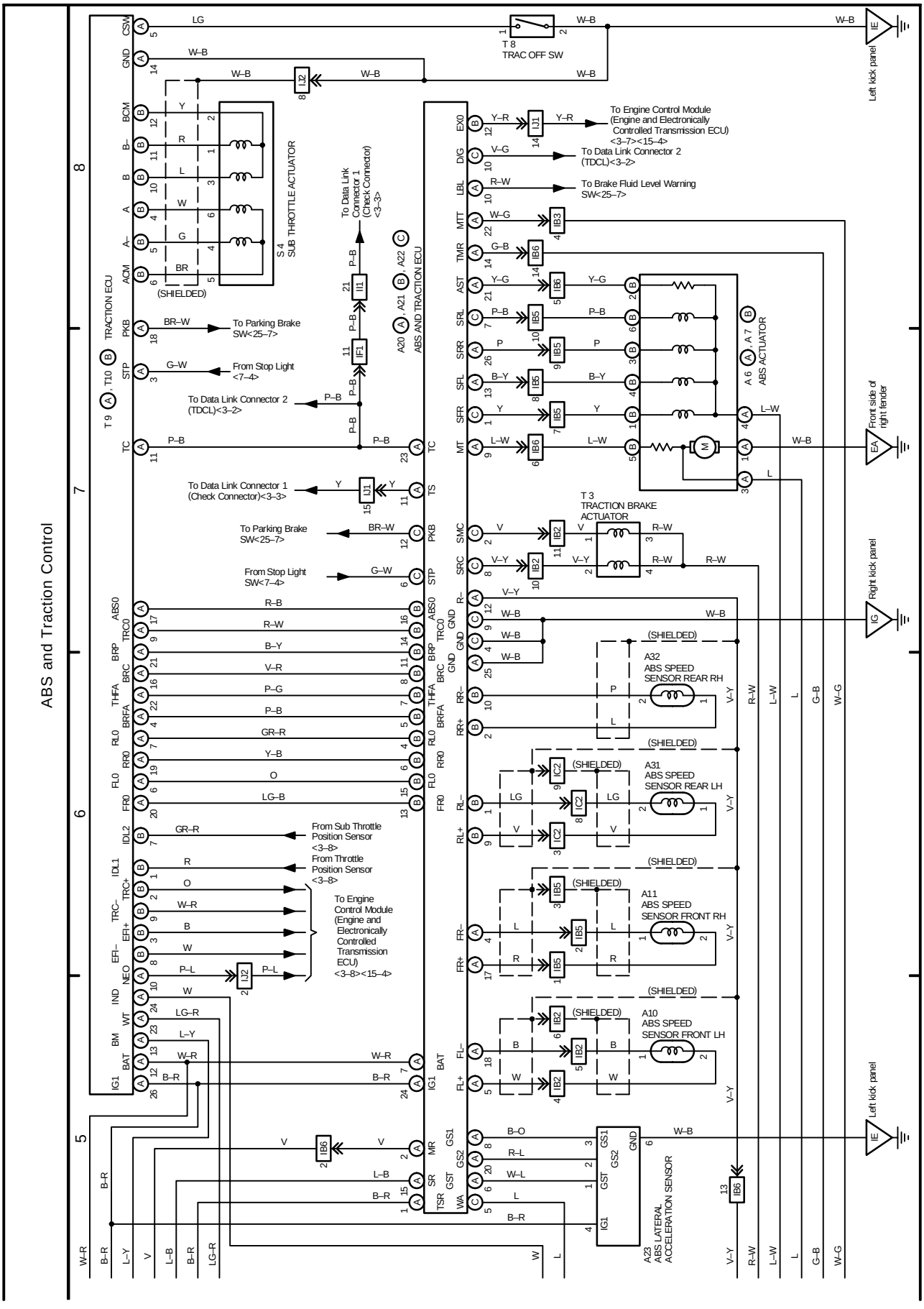
ABS and Traction Control
TRACTION ECU
ABS AND TRACTION ECU
T 8
TRAC OFF SW
Left kick panel
To Engine Control Module (Engine and Electronically Controlled Transmission ECU) <3–7><15–4>
To Data Link Connector 2 (TDCL)<3–2>
To Brake Fluid Level Warning SW<25–7>
S 4
SUB THROTTLE ACTUATOR
(SHIELDED)
To Data Link Connector 1 (Check Connector) <3–3>
To Parking Brake SW<25–7>
From Stop Light <7–4>
To Data Link Connector 2 (TDCL)<3–2>
To Data Link Connector 1 (Check Connector)<3–3>
To Parking Brake SW<25–7>
From Stop Light SW<7–4>
T 3
TRACTION BRAKE ACTUATOR
A 6 , A 7
ABS ACTUATOR
Front side of right fender
Right kick panel
A32
ABS SPEED SENSOR REAR RH
A31
ABS SPEED SENSOR REAR LH
A11
ABS SPEED SENSOR FRONT RH
A10
ABS SPEED SENSOR FRONT LH
From Sub Throttle Position Sensor <3–8>
From Throttle Position Sensor <3–8>
To Engine Control Module (Engine and Electronically Controlled Transmission ECU) <3–8><15–4>
A23
ABS LATERAL ACCELERATION SENSOR

OVERALL ELECTRICAL WIRING DIAGRAM

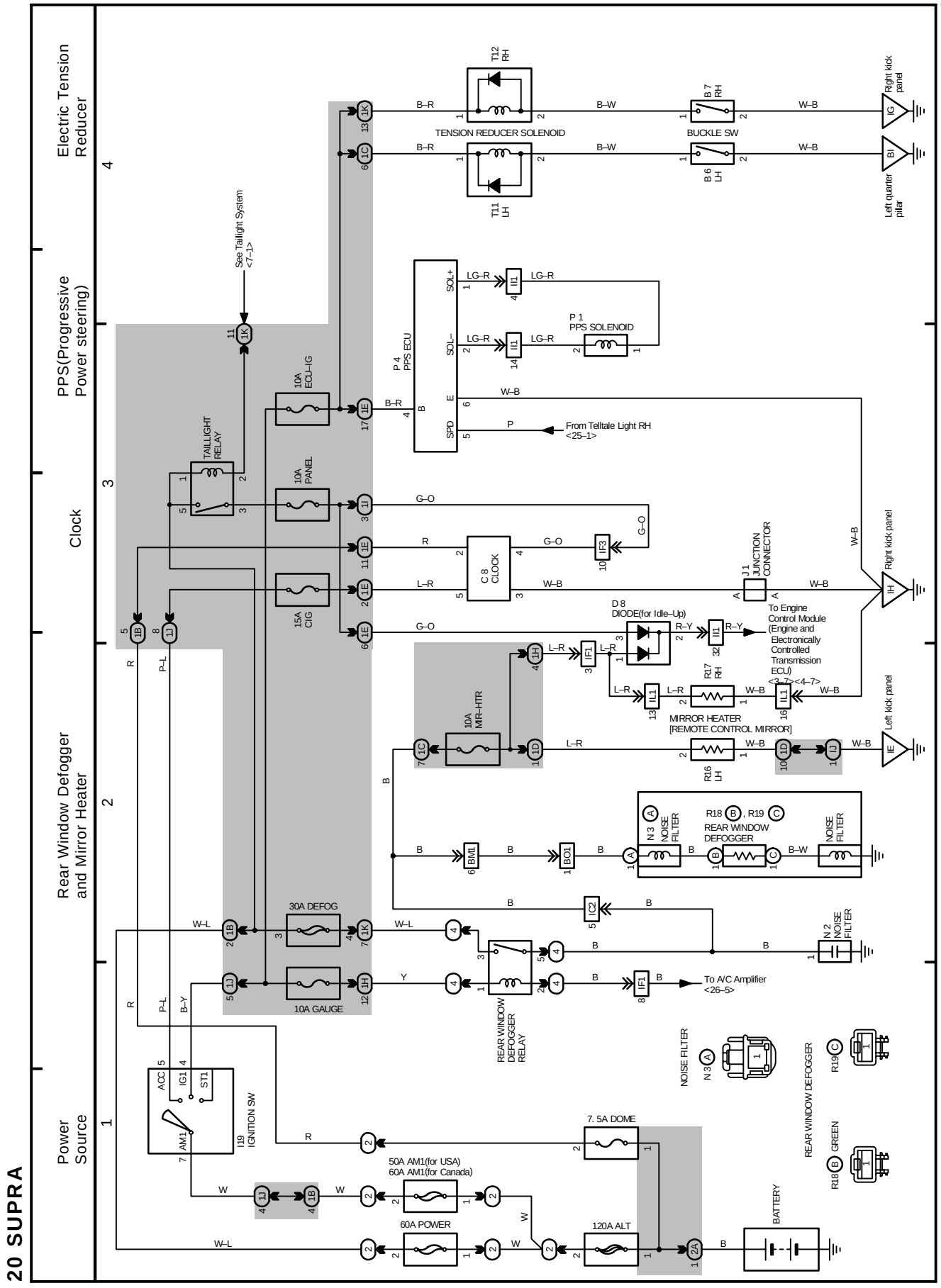

21 SUPRA

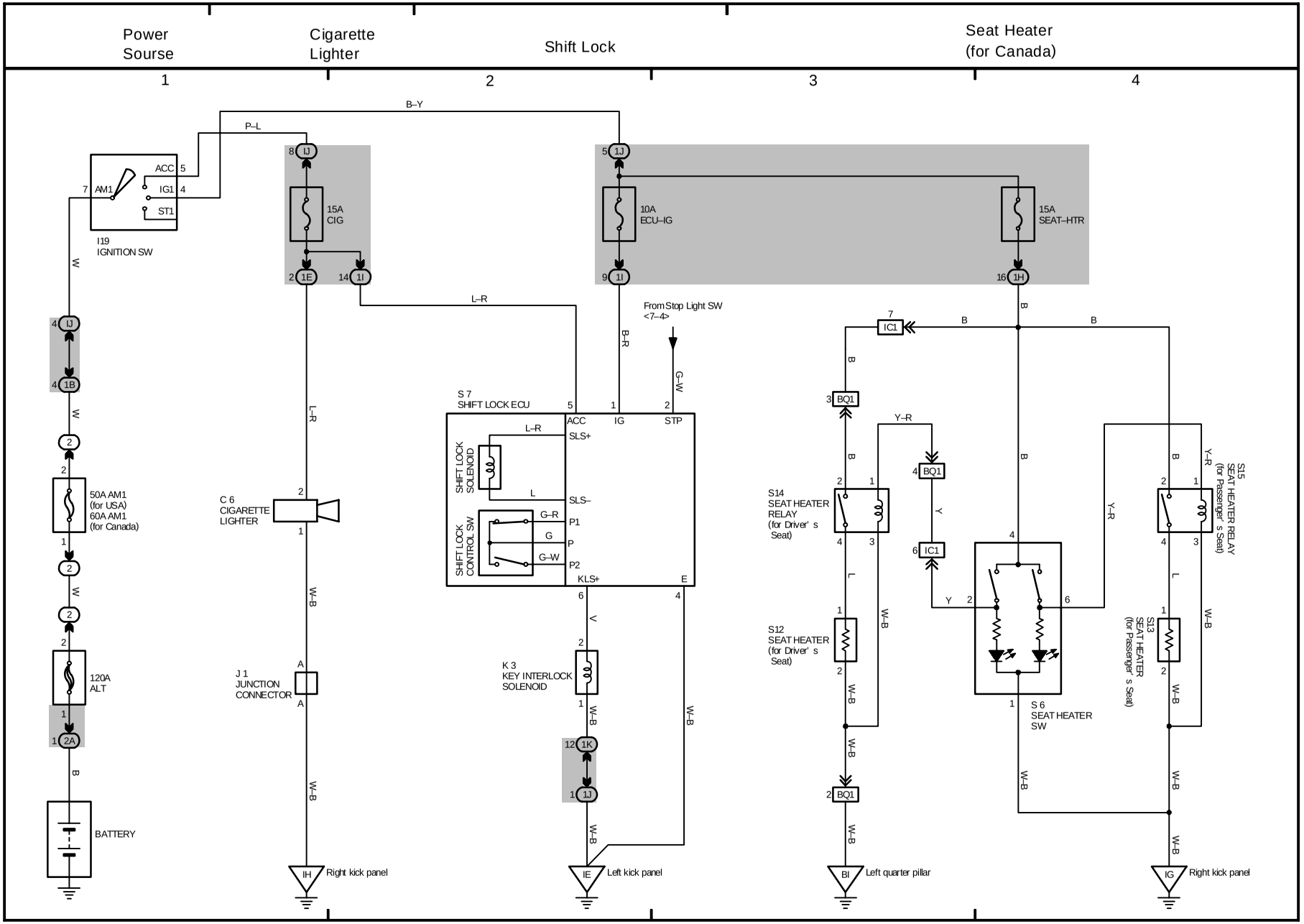
Power Sourse
Cigarette Lighter
Shift Lock
Seat Heater (for Canada)
1
2
3
4
B–Y
P–L
ACC
IG1
ST1
AM1
I19
IGNITION SW
15A
CIG
10A
ECU–IG
15A
SEAT–HTR
W
L–R
From Stop Light SW
<7–4>
B–R
G–W
S 7
SHIFT LOCK ECU
ACC
IG
STP
SLS+
SLS–
KLS+
SHIFT LOCK SOLENOID
SHIFT LOCK CONTROL SW
G–R
P1
G
P
G–W
P2
50A AM1
(for USA)
60A AM1
(for Canada)
120A
ALT
BATTERY
C 6
CIGARETTE LIGHTER
J 1
JUNCTION CONNECTOR
K 3
KEY INTERLOCK SOLENOID
W–B
V
IC1
BQ1
Y–R
Y
S14
SEAT HEATER RELAY
(for Driver' s Seat)
S12
SEAT HEATER
(for Driver' s Seat)
S 6
SEAT HEATER SW
S13
SEAT HEATER
(for Passenger' s Seat)
S15
SEAT HEATER RELAY
(for Passenger' s Seat)
Right kick panel
Left kick panel
Left quarter pillar
Right kick panel

OVERALL ELECTRICAL WIRING DIAGRAM

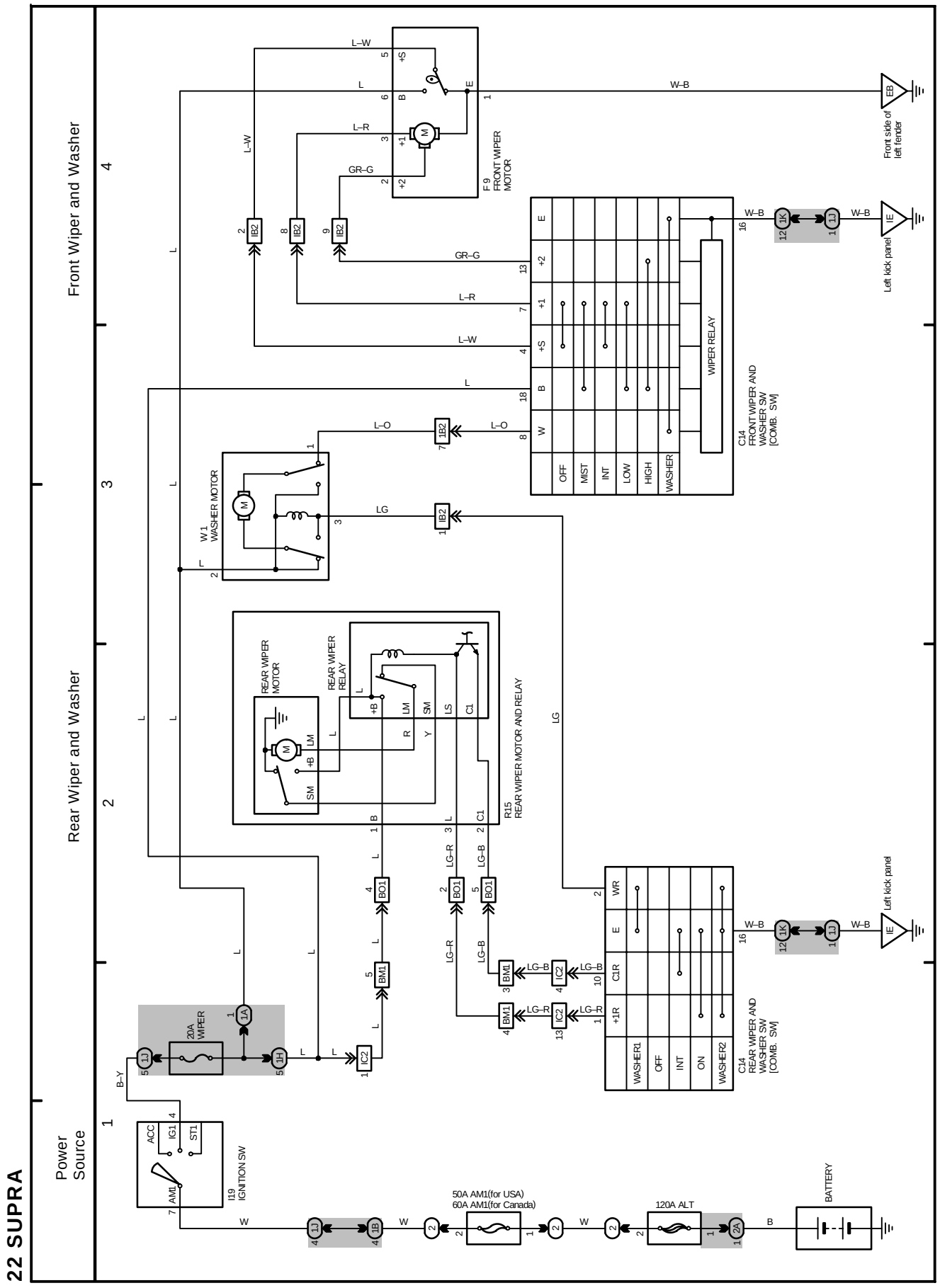

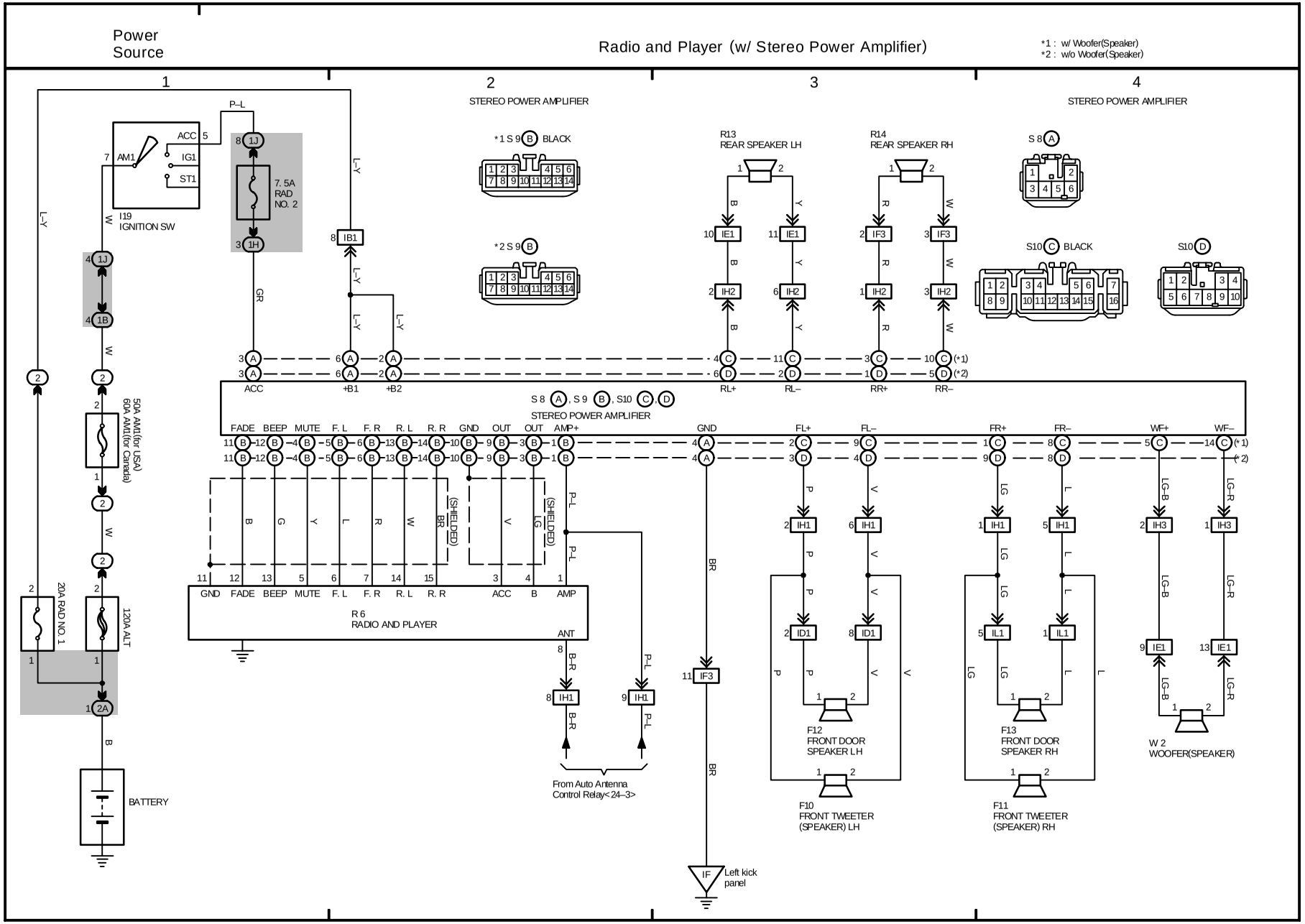
Power Source
Radio and Player (w/ Stereo Power Amplifier)
*1 : w/ Woofer(Speaker)
*2 : w/o Woofer(Speaker)
1
2
3
4
STEREO POWER AMPLIFIER
STEREO POWER AMPLIFIER
P–L
ACC
IG1
ST1
AM1
I19
IGNITION SW
7.5A
RAD
NO. 2
L–Y
W
GR
*1 S9 B BLACK
*2 S9 B
R13
REAR SPEAKER LH
R14
REAR SPEAKER RH
S8 A
S10 C BLACK
S10 D
ACC
+B1
+B2
RL+
RL–
RR+
RR–
S8 A, S9 B, S10 C, D
STEREO POWER AMPLIFIER
FADE BEEP MUTE F. L F. R R. L R. R GND OUT OUT AMP+
GND FL+ FL– FR+ FR– WF+ WF–
50A AM1(for USA)
60A AM1(for Canada)
20A RAD NO. 1
120A ALT
BATTERY
R6
RADIO AND PLAYER
GND FADE BEEP MUTE F. L F. R R. L R. R ACC B AMP
ANT
(SHIELDED)
P–L
B–R
From Auto Antenna
Control Relay<24–3>
F12
FRONT DOOR
SPEAKER LH
F13
FRONT DOOR
SPEAKER RH
F10
FRONT TWEETER
(SPEAKER) LH
F11
FRONT TWEETER
(SPEAKER) RH
W 2
WOOFER(SPEAKER)
IF
Left kick
panel

OVERALL ELECTRICAL WIRING DIAGRAM

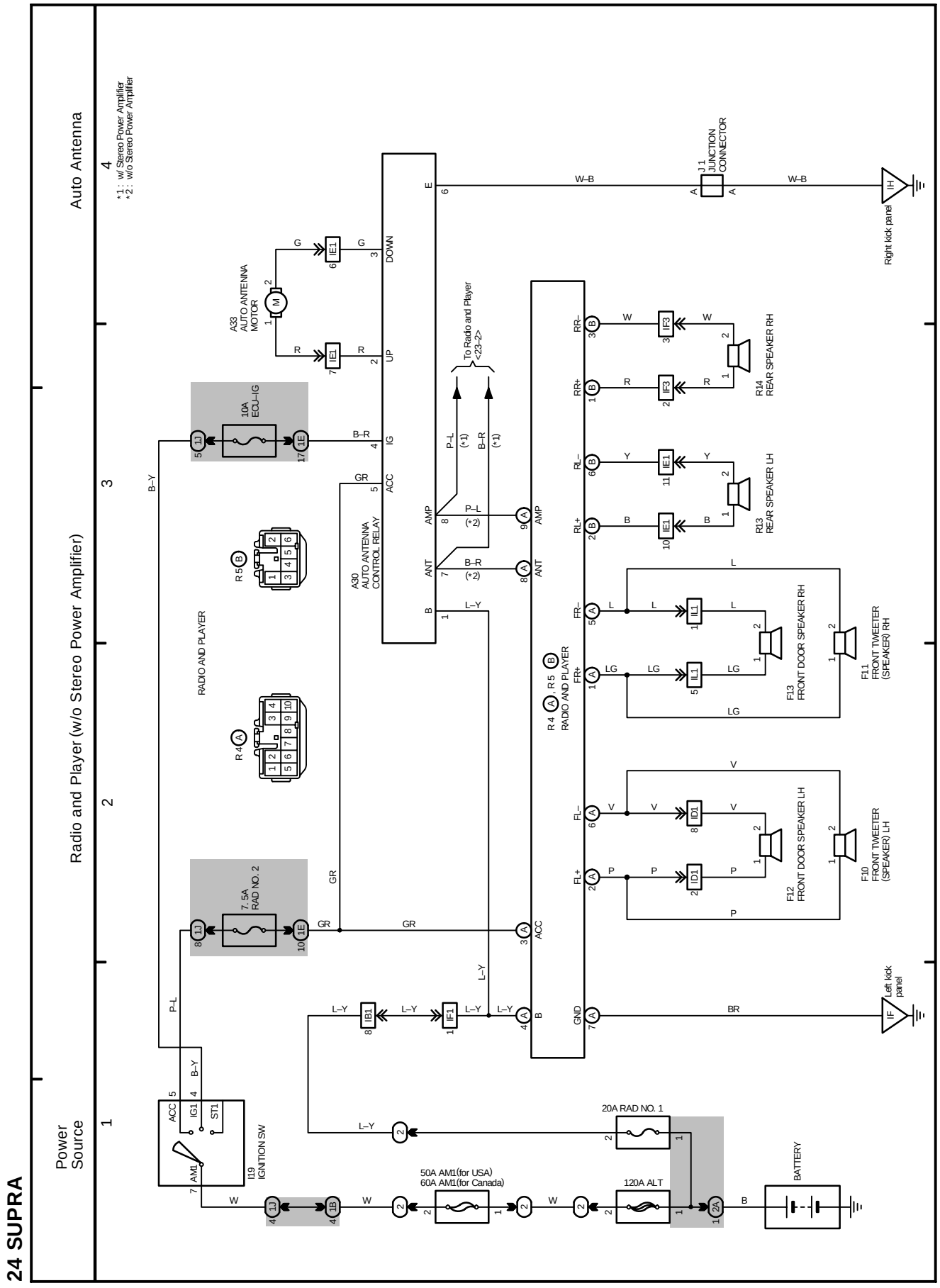

OVERALL ELECTRICAL WIRING DIAGRAM

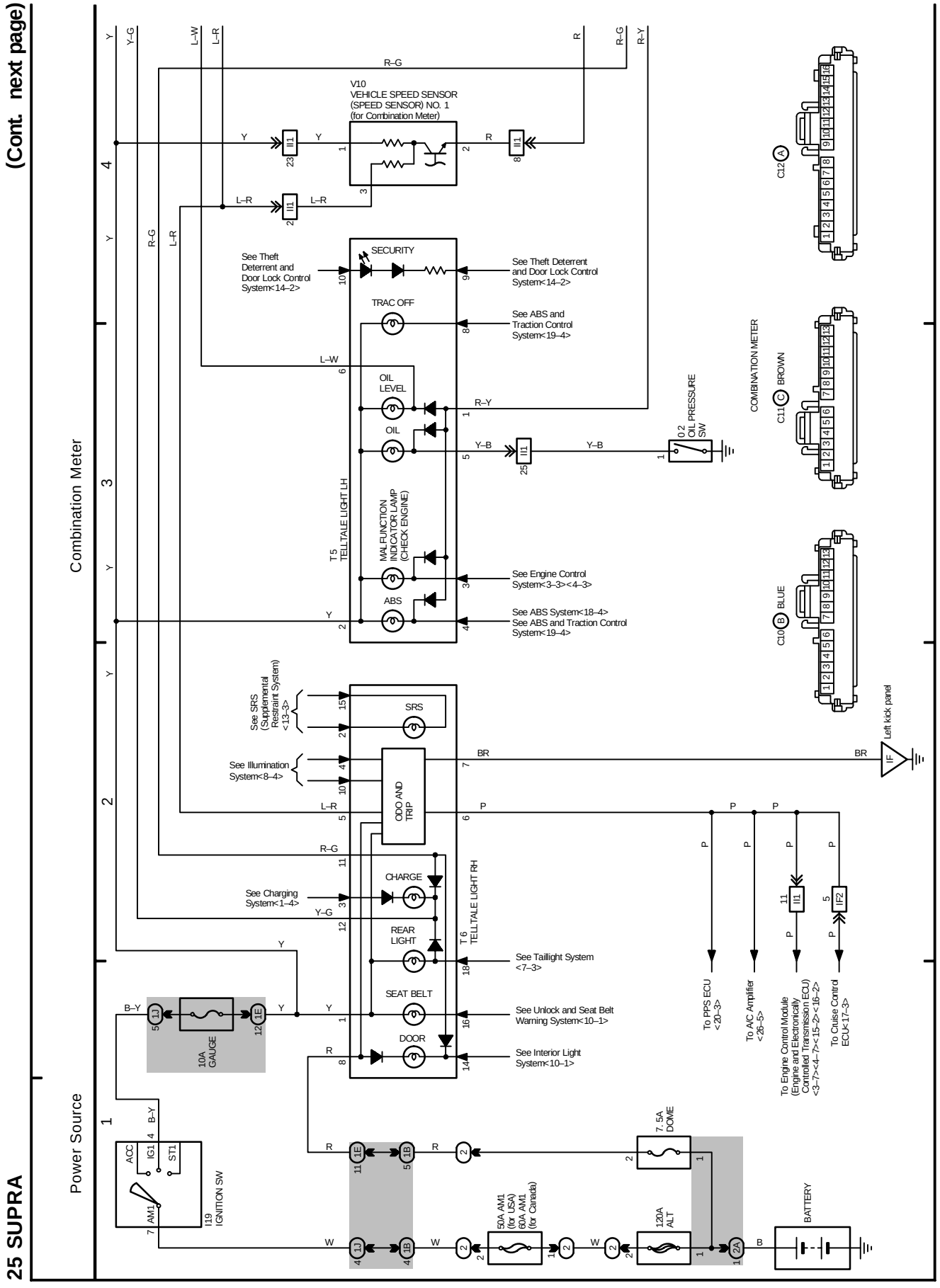

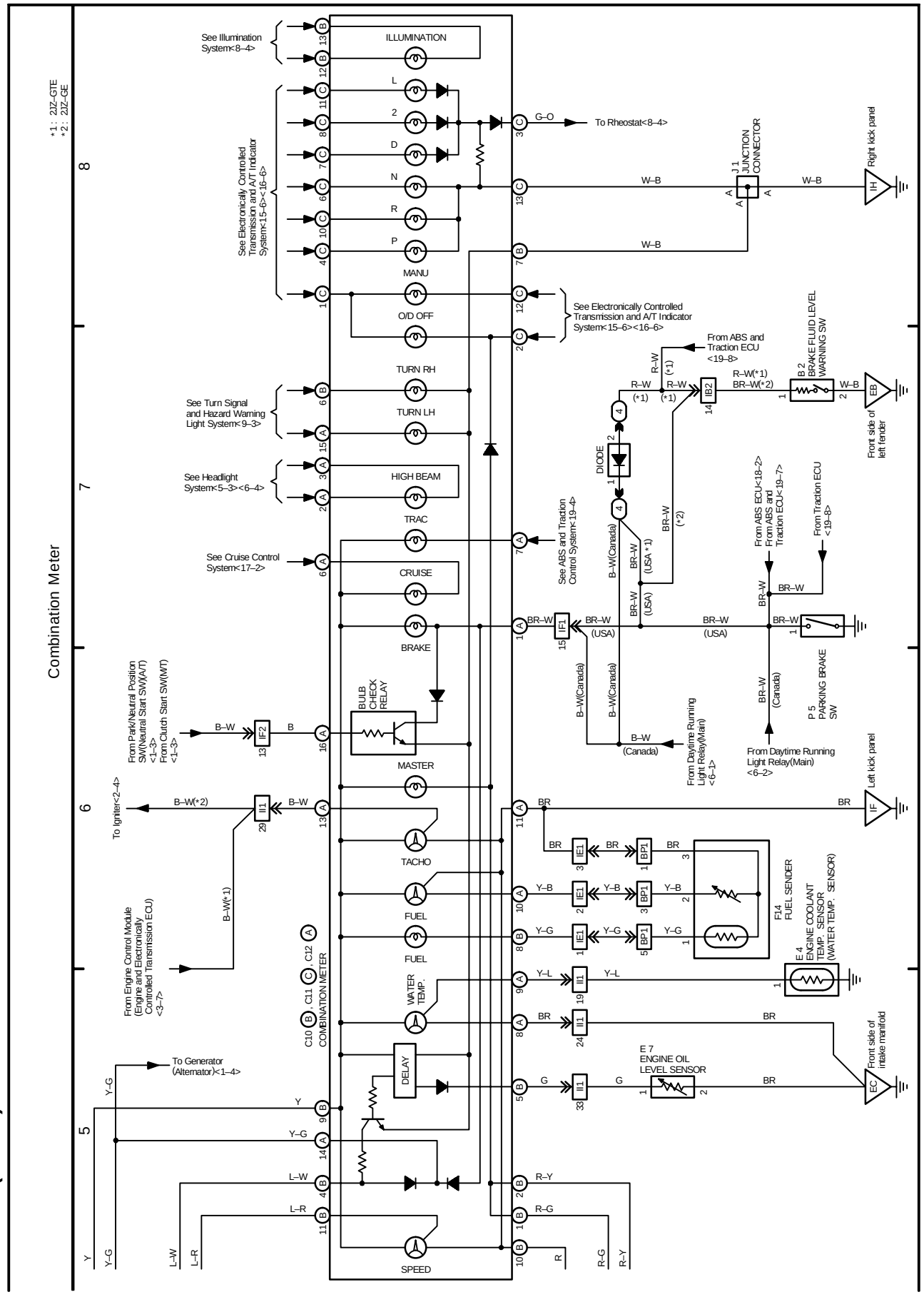
Combination Meter
*1: 2JZ-GTE
*2: 2JZ-GE
ILLUMINATION
See Illumination System<8–4>
See Electronically Controlled Transmission and A/T Indicator System<15–6><16–6>
L
2
D
N
R
P
MANU
O/D OFF
TURN RH
TURN LH
See Turn Signal and Hazard Warning Light System<9–3>
See Headlight System<5–3><6–4>
HIGH BEAM
TRAC
See Cruise Control System<17–2>
CRUISE
BRAKE
BULB CHECK RELAY
MASTER
TACHO
FUEL
FUEL
WATER TEMP.
SPEED
DELAY
To Rheostat<8–4>
See Electronically Controlled Transmission and A/T Indicator System<15–6><16–6>
J 1 JUNCTION CONNECTOR
Right kick panel
From ABS and Traction ECU <19–8>
B 2 BRAKE FLUID LEVEL WARNING SW
Front side of left fender
DIODE
See ABS and Traction Control System<19–4>
From ABS ECU<18–2>
From ABS and Traction ECU<19–7>
From Traction ECU <19–8>
P 5 PARKING BRAKE SW
From Daytime Running Light Relay(Main) <6–1>
From Daytime Running Light Relay(Main) <6–2>
Left kick panel
F14 FUEL SENDER
E 4 ENGINE COOLANT TEMP. SENSOR (WATER TEMP. SENSOR)
E 7 ENGINE OIL LEVEL SENSOR
Front side of intake manifold
From Park/Neutral Position SW(Neutral Start SW(A/T) <1–3> From Clutch Start SW(M/T) <1–3>
To Igniter<2–4>
From Engine Control Module (Engine and Electronically Controlled Transmission ECU) <3–7>
To Generator (Alternator)<1–4>
C10 (B), C11 (C), C12 (A) COMBINATION METER
W–B
G–O
R–W
BR–W
B–W
Y–B
Y–G
Y–L
R–Y
R–G
L–W
L–R
BR
G
Y
R

OVERALL ELECTRICAL WIRING DIAGRAM

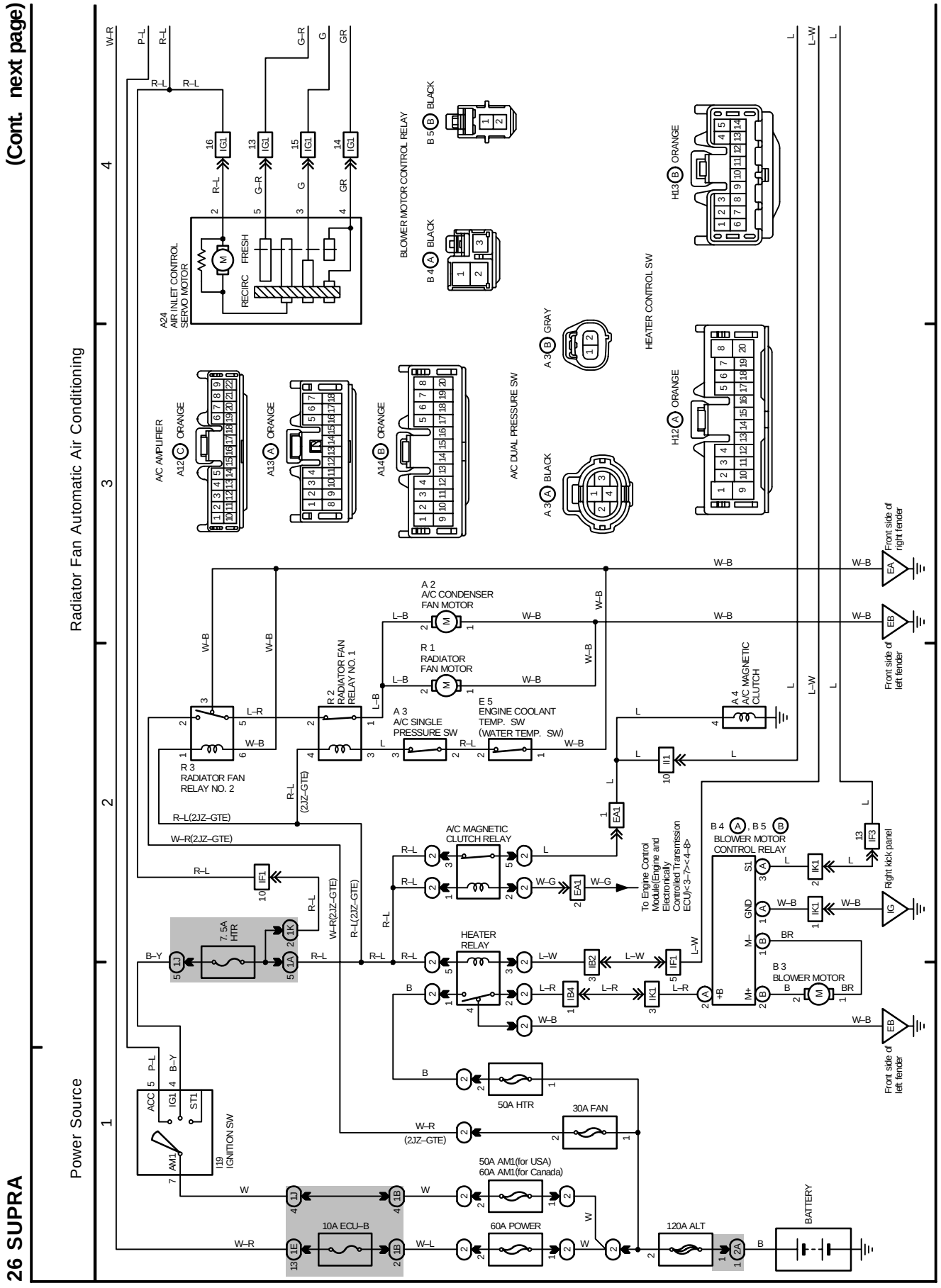

26 SUPRA (Cont' d)

